Pacific Northwest
NATIONAL LABORATORY
Proudly Operated by Battelle Since 1965

Invitation For Bid
629497
Table of Contents

3410 Chiller #5 Installation/3410 Chiller CHW Pump

Invitation For Bid
Instructions to Bidders

Part I – The Schedule

Section A. Solicitation, Offer and Award
Section B. Supplies or Services
Section C. Description of the Work
Section D. Packaging and Marking
Section E. Inspection and Acceptance
Section F. Period of Performance
Section G. Contract Administration
Section H. Special Provisions

Part II – Contract Clauses

Section I. General Provisions Fixed Price Construction Contracts

Part III – Attachments Section J

Attached Documents:

1. SOW/Div. 1/General Requirements
2. Project Drawings
3. Reference Documents
4. Representations and Certifications

Forms On-line at: http://www.pnnl.gov/contracts/contractdocuments.aspx

1. Acceptance of Completed Work
2. Bid Bond – SF 24
3. Certificate of Liability Insurance – ACORD 25
4. Certified Payroll – WH-347
5. Construction Badge Request
6. Contract Daily Report
7. Contract Release
8. Injury/Illness Report
9. Invoice Template
10. OSHA Record Keeping
11. Payment Bond – SF 25a
12. Performance Bond – SF 25
13. Recycling Submittal Form
14. Request for Information
15. Statement and Acknowledgement - SF1413
16. Submittal Request

Pacific Northwest
NATIONAL LABORATORY
Proudly Operated by **Battelle** *Since 1965*

Invitation For Bid
#629497
3410 Chiller #5 Installation/3410 Chiller CHW Pump

Battelle Memorial Institute, Pacific Northwest Division (Battelle) in connection with Battelle's Operation and Maintenance of the U.S. Department of Energy's Pacific Northwest National Laboratory (PNNL) at Richland, Washington under Contract number DE-AC05-76RL01830 is pleased to invite bids for the ***3410 Chiller #5 Installation/3410 Chiller CHW Pump*** to be installed under this Invitation For Bid (IFB).

IFB Number:	**629497**
Title:	***3410 Chiller #5 Installation/3410 Chiller CHW Pump***
Location:	3410 Material Science and Tech Lab, 622 Horn Rapids Road, Richland, WA 99352
Issue Date:	March 2, 2021
Closing Date/Bid Opening:	Tuesday, March 23, 2021, 3:00 PM PDT – Virtual Bid opening to be held. Please call in to 509-408-1681, then enter Conference ID: 786-765-694#
NAICS Code:	**236220 (Commercial & Institutional Building Construction)**
Restriction:	None
Contract Type:	Firm Fixed Price
Basis of Award:	Sealed Bid: Lowest Price, Technically Responsive meeting the mandatory criteria stated below
MANDATORY Contractor Qualification Requirements:	***Prime Contractor* shall be pre-qualified** prior to *contract award*; likewise, ***Subcontractors to a Prime* Contractor** performing work **shall be prequalified** prior to *starting work*. Note - An Experience Modification Rate (EMR) of less than or equal to 0.9 for Prime Contractor (1.0 for Subcontractors) and no willful OSHA/State Labor & Industries Citations over the past three years is needed to meet the pre-qualification requirement. To apply for pre-qualification, see: https://ebs.pnl.gov/.
Duration/Completion:	Estimated Project Complete ready for use, No Later Than, ***7/30/2021.***
MANDATORY Pre-bid Meeting / Job Walk:	**A MANDATORY Virtual pre-bid conference will be held on Tuesday, March 9, 2021 at 2:30pm please email the CS if you plan to attend and you will be sent the Teams meeting invitation.** **PLEASE NOTE: Only contractors attending the Mandatory Virtual pre-bid Conference may attend the Mandatory pre-bid walkdown. Contractors must attend both to be able to bid/propose on this project.**

	A MANDATORY job walk through will take place on Wednesday, March 10, 2021, at 10:00am PDT. Location: 3410 Building, 622 Horn Rapids Road, Richland, WA 99352. ***BADGES ARE REQUIRED – Please send an email with 1) your full name (including middle initial), 2) month/day of birth, 3) last 4 digits of SS#, 4) state if you are a US Citizen (Yes/No), 5) the date of the job walk, 6) which Contract Specialist is hosting the job walk to Teresa Demitruk (teresa.demitruk@pnnl.gov) at least 2 business days prior to the pre-bid walk.*** ***Face coverings, Safety glasses and significant footwear are required for this walk down.***
Contract Specialist:	**Name:** Melissa G. Newell **Office Phone:** 509-372-4623 **Email Address:** melissa.newell@pnnl.gov

1. SYNOPSIS

The Work consists of two projects being constructed concurrently. The two projects are S804449 - 3410 Chiller #5 Installation and S789008 - 3410 Chiller (Air-cooled) Redundant CHW Pump Installation. The 3410 Central Utility Plant (CUP) is located in room 1706 of the 3410 building.

This above Summary of Work is not all inclusive of the requirements set forth under the terms of the Contract. Contractor shall refer to the Specification and Drawings issued which depict the Work in detail.

2. INQUIRIES & SUBMISSION OF BIDS

2.1. All inquiries shall be submitted in writing by email.

2.2. Bids and modifications shall be submitted by email.

2.3. Bids shall contain the following completed documents:

- Solicitation, Offer & Award Form
- Representations & Certifications
- Construction Pricing Form
- Proof of Certificate of Liability Insurance
- Copy of Bidder's Washington State Contractor's License
- Bid Bond
- Prime and all subcontractors must flow down HSSA. Provide documentation.

2.4. Failure to submit **all** of the above required documents with your bid may cause your bid to be determined non-responsive and removed from consideration for award.

3. COMMUNICATIONS

3.1. **Submission of Bids**.

3.1.1. Bids shall be received via email on or before the due date at the following address:

melissa.newell@pnnl.gov

3.1.2. Bids and bid modifications shall be submitted Via email to the Contracts Specialist listed above.

3.2. **Inquiries:** All inquiries shall be sent to:

Melissa.newell@pnnl.gov

3.3. **Requests for Clarification / Interpretation:** If the Bidder finds discrepancies, omissions, or is in doubt as to the true meaning of any part of the contract documents, *Bidder MUST submit a WRITTEN request* for clarification or interpretation using Request for Information (RFI) form at http://www.pnnl.gov/contracts/contractdocuments.aspx and address it to the Contract Specialist listed on Page 1, *no later than 2:00 p.m. PST; March 16, 2021*. Submittals *may not be considered if submitted after this time*.

Regards,

Melissa G. Newell

Contracting Professional

Pacific Northwest
NATIONAL LABORATORY
Proudly Operated by Battelle Since 1965

Invitation For Bid
629497
Instructions to Bidders

3410 Chiller #5 Installation/3410 Chiller CHW Pump

Table of Contents

1. NAICS Classification: 236220 1
2. Commencement, Prosecution, and Completion of Work [Adapted from FAR 52.211- 10 (Apr 1984)] 1
3. Bid Guarantee [Adapted from FAR 52.228-1 (Sept 1996)] 2
4. Contractor Prequalification — Construction 2
5. Amendments to Invitations for Bids [Adapted from FAR 52.214-3 (Dec 2016)] 3
6. False Statements in Bids [Adapted from 52.214-4 (Apr 1984)] 3
7. Submission of Bids [Adapted from FAR 52.214-5 (Dec 2016)] 3
8. Explanation to Prospective Bidders [Adapted from FAR 52.214-6 (Apr 1984)] 3
9. Late Submissions, Modifications, and Withdrawals of Bids [Adapted from FAR 52.214-7 (Nov 1999)] 4
10. Period for Acceptance of Bids [Adapted from FAR 52.214-15 (Apr 1984)] 5
11. Preparation of Bids—Construction [Adapted from FAR 52.214-18 (Apr 1984)] 5
12. Contract Award—Sealed Bidding—Construction [Adapted from FAR 52.214-19 (Aug 1996)] 6
13. Pricing Conditions [Adapted from FAR 52.214-34 & 35 (Apr 1991)] 6
14. Site Investigation and Conditions Affecting the Work [Adapted from FAR 52.236-3 (Apr 1984)] 7
15. Flow-down of Contract Clauses 7
16. PNNL Contractor Environmental Safety and Health (CESH) Documents 8

1. NAICS Classification: 236220 (size standard $39.5M)

NAICS is the abbreviation for “North American Industry Classification System”. NAICS was developed by the U.S., Canada, and Mexico in a joint effort to provide new comparability in statistics about business activity across North America. NAICS assigns codes to all economic activity within twenty broad sectors and is accepted and used by the Small Business Association (SBA) in determining size standards where eligibility as a small business is a factor or a consideration.

2. Commencement, Prosecution, and Completion of Work [Adapted from FAR 52.211-10 (Apr 1984)]

The Contractor shall be required to (a) commence Work under this Contract As Soon As Possible after the date the Contractor receives the Notice to Proceed, (b) prosecute the Work diligently, and (c) entire Work ready for use no later than **7/30/2021**. It is anticipated that the successful contractor will receive the Award on or around **March 30, 2021**.

3. Bid Guarantee [Adapted from FAR 52.228-1 (Sept 1996)]

(a) Failure to furnish a bid guarantee in the proper form and amount, by the time set for opening of bids, may be cause for rejection of the bid.
(b) The Proposer shall furnish a bid guarantee in the form of a firm commitment, *e.g.,* bid bond supported by good and sufficient surety or sureties acceptable to Battelle, postal money order, certified check, cashier's check, or irrevocable letter of credit. Battelle will return bid guarantees, other than bid bonds—
(a) To unsuccessful Bidders as soon as practicable after the opening of bids; and
(b) To the successful Bidder upon execution of Contractual documents and bonds (including any necessary coinsurance or reinsurance agreements), as required by the bid as accepted.
(c) The amount of the bid guarantee shall be **20% percent of the bid price or $3,000,000**, whichever is less.
(d) If the successful Bidder, upon acceptance of its bid by Battelle within the period specified for acceptance, fails to execute all Contractual documents or furnish executed bond(s) within 10 days after receipt of the forms by the Bidder, Battelle may terminate the Contract for default.
(e) In the event the Contract is terminated for default, the Bidder is liable for any cost of acquiring the Work that exceeds the amount of its bid, and the bid guarantee is available to offset the difference.

4. Contractor Prequalification — Construction

(a) Contractors must meet Battelle's minimum qualification requirements to be eligible to Contract with Battelle directly as a Prime Contractor, or participate as a Subcontractor to a Prime Contractor performing Work on-site. Battelle's Prime Contractor and Subcontractor qualification requirements are posted on our Acquisition website at https://ebs.pnnl.gov. Any required supporting documents should be attached electronically and submitted with the completed Qualification Statements. Contractors will be notified by email of the acceptability of their qualifications.

(b) Bids will be solicited and accepted from pre-qualified sources ONLY.

(c) Prior to performing any awarded Contract Work on-site, each Subcontractor to the Prime Contractor must be accepted as meeting Battelle's qualification requirements.

5. Amendments to Invitations for Bids [Adapted from FAR 52.214-3 (Dec 2016)]

(a) If this solicitation is amended, then all terms and conditions which are not modified remain unchanged.

(b) Bidders shall acknowledge receipt of any amendment to this solicitation by

(1) signing and returning the amendment,

(2) identifying the amendment number and date in the space provided for this purpose on the form for submitting a bid,

(3) letter;

(4) facsimile, if facsimile bids are authorized in the solicitation, or

(5) By email, if email bids are authorized in the solicitation. Battelle must receive the acknowledgment by the time and at the place specified for receipt of bids.

6. False Statements in Bids [Adapted from 52.214-4 (Apr 1984)]

Bidders must provide full, accurate, and complete information as required by this solicitation and its attachments. The penalty for making false statements in bids is prescribed in 18 U.S.C. 1001.

7. Submission of Bids

Electronic submittal of the Bid is required. The Bid shall be submitted electronically to: Melissa.newell@pnnl.gov.

8. Explanation to Prospective Bidders [Adapted from FAR 52.214-6 (Apr 1984)]

Any prospective Bidder desiring an explanation or interpretation of the solicitation, drawings, specifications, etc., must request it in writing soon enough to allow a reply to reach all prospective Bidders before the submission of their bids. Oral explanations or instructions given before the award of a Contract will not be binding. Any information given a prospective Bidder concerning a solicitation will be furnished promptly to all other prospective Bidders as an amendment to the solicitation, if that information is necessary in submitting bids or if the lack of it would be prejudicial to other prospective Bidders.

9. Late Submissions, Modifications, and Withdrawals of Bids [Adapted from FAR 52.214-7 (Nov 1999)]

(a) Bidders are responsible for submitting bids, and any modifications or withdrawals, so as to reach the Battelle office designated in the invitation for bids (IFB) by the time specified in the IFB. If no time is specified in the IFB, the time for receipt is 10:00 a.m., local time, for the designated Battelle office on the date that bids are due.

(b)(1) Any bid, modification, or withdrawal received at the Battelle office designated in the IFB after the exact time specified for receipt of bids is "late" and will not be considered unless it is received before award is made, the Contract Specialist determines that accepting the late bid would not unduly delay the acquisition; and—

(i) If it was transmitted through an electronic commerce method authorized by the IFB, it was received at the initial point of entry to the Battelle infrastructure not later than 5:00 p.m. one Working day prior to the date specified for receipt of bids; or

(ii) There is acceptable evidence to establish that it was received at the Battelle installation designated for receipt of bids and was under Battelle's control prior to the time set for receipt of bids.

(2) However, a late modification of an otherwise successful bid that makes its terms more favorable to Battelle will be considered at any time it is received and may be accepted.

(c) Acceptable evidence to establish the time of receipt at the Battelle installation includes the time/date stamp of that installation on the bid wrapper, other documentary evidence of receipt maintained by the installation, or oral testimony or statements of Battelle personnel.

(d) If an emergency or unanticipated event interrupts normal Battelle processes so that bids cannot be received at the Battelle office designated for receipt of bids by the exact time specified in the IFB and urgent Battelle requirements preclude amendment of the IFB, the time specified for receipt of bids will be deemed to be extended to the same time of day specified in the solicitation on the first Work day on which normal Battelle processes resume.

(e) Bids may be withdrawn by written notice received at any time before the exact time set for receipt of bids. If the IFB authorizes facsimile bids, bids may be withdrawn via facsimile received at any time before the exact time set for receipt of bids, subject to the conditions specified in the Instruction to Bidders entitled "Facsimile Bids." A bid may be withdrawn in person by a Bidder or its authorized representative if, before the exact time

set for receipt of bids, the identity of the person requesting withdrawal is established and the person signs a receipt for the bid.

10. Period for Acceptance of Bids [Adapted from FAR 52.214-15 (Apr 1984)]

In compliance with the solicitation, the Bidder agrees, if this bid is accepted within **90 calendar days** from the date specified in the solicitation for receipt of bids, to furnish any or all items upon which prices are bid at the price set opposite each item, delivered at the designated point(s), within the time specified in the Schedule.

11. Preparation of Bids—Construction [Adapted from FAR 52.214-18 (Apr 1984)]

(a) **Bids must be—**

(1) Submitted on the forms furnished by Battelle or on copies of those forms, and
(2) Manually or electronically signed. The person signing a bid must initial each erasure or change appearing on any bid form.

(b) The bid form may require Bidders to submit bid prices for one or more items on various bases, including—

(1) Lump sum proposing;
(2) Alternate prices;
(3) Units of construction; or
(4) Any combination of paragraphs (b)(1) through (b)(3) of this provision.

(c) If the solicitation requires proposing on all items, failure to do so will disqualify the bid. If proposing on all items is not required, Bidders should insert the words “no bid” in the space provided for any item on which no price is submitted.

(d) Alternate bids will not be considered unless this solicitation authorizes their submission.

(e) **Additional Bid Requirements—**

(1) **Bid Guarantee:** – *is required*.
(2) **Representations and Certifications:** Bidder shall complete and submit company representations and certifications.
(3) **Insurance:** Bidder shall submit verification of possession of the insurance coverage listed in the General Provisions.
(4) **Permits and Licenses:** Bidder shall submit the Certificate of License number, which grants them the authority to Work as a Contractor in the State, County and/or Municipality where the Work is to be performed. If Bidder does not have

such license or certificate, a copy of the application for it must be submitted with an estimate of time required to obtain it.

(5) **HSSA/Davis Bacon:** General and Subs must flow down the HSSA for this project. Provide Documentation. Davis-Bacon reporting is required.

(6) **Construction Pricing Form:** *is required*.

12. Contract Award Construction [Adapted from FAR 52.214-19 (Aug 1996)]

(a) Battelle will evaluate bids in response to this solicitation without discussions and will award a Contract to the responsible Bidder whose bid, conforming to the solicitation, will be most advantageous to Battelle, considering only price and the price-related factors specified elsewhere in the solicitation.

(b) Battelle may reject any or all bids, and waive informalities or minor irregularities in bids received.

(c) Battelle may accept any item or combination of items, unless doing so is precluded by a restrictive limitation in the solicitation or the bid.

(d) Battelle may reject a bid as non-responsive if the prices proposed are materially unbalanced between line items or sub-line items. A bid is materially unbalanced when it is based on prices significantly less than cost for some Work and prices which are significantly overstated in relation to cost for other Work, and if there is a reasonable doubt that the bid will result in the lowest overall cost to Battelle even though it may be the low evaluated bid, or if it is so unbalanced as to be tantamount to allowing an advance payment.

13. Pricing Conditions [Adapted from FAR 52.214-34 & 35 (Apr 1991)]

(a) Offers submitted in response to this solicitation shall be in the English language. Offers received in other than English shall be rejected.

(b) Offers submitted in response to this solicitation shall be in terms of U.S. dollars. Offers received in other than U.S. dollars shall be rejected.

(c) All pricing must be firm for the duration of this Contract.

(d) The quoted price(s) must include all costs to for materials, labor, equipment, testing and any and all items of expense, fees, taxes, duties, overhead and profit for full and complete performance of the Work.

14. Site Investigation and Conditions Affecting the Work [Adapted from FAR 52.236-3 (Apr 1984)]

(a) The Contractor must take steps reasonably necessary to ascertain the nature and location of the Work, and to investigate and satisfy itself as to the general and local conditions which can affect the Work or its cost, including but not limited to—

(1) Conditions bearing upon transportation, disposal, handling, and storage of materials;
(2) The availability of labor, water, electric power, and roads;
(3) Uncertainties of weather, river stages, tides, or similar physical conditions at the site;
(4) The conformation and conditions of the ground; and
(5) The character of equipment and facilities needed preliminary to and during Work performance.

The Contractor must also satisfy itself as to the character, quality, and quantity of surface and subsurface materials or obstacles to be encountered insofar as this information is reasonably ascertainable from an inspection of the site, including all exploratory Work done by Battelle, as well as from the drawings and specifications made a part of this Contract. Any failure of the Contractor to take the actions described and acknowledged in this paragraph will not relieve the Contractor from responsibility for estimating properly the difficulty and cost of successfully performing the Work, or for proceeding to successfully perform the Work without additional expense to Battelle.

(b) Battelle assumes no responsibility for any conclusions or interpretations made by the Contractor based on the information made available by Battelle. Nor does Battelle assume responsibility for any understanding reached or representation made concerning conditions which can affect the Work by any of its officers or agents before the execution of this Contract, unless that understanding or representation is expressly stated in this Contract.

15. Flow-down of Contract Clauses

(a) Any Contract resulting from this solicitation, by and between Battelle and Contractor (including all subcontractors and suppliers), for services in connection with Battelle's Management, Operation and Maintenance of the U.S. Department of Energy's Pacific Northwest Laboratory (PNNL) at Richland, Washington, under Contract DE-AC05-76RL01830 is subject to the terms and conditions of the General Provisions set forth in this solicitation. Contractor shall flow-down all terms and conditions in this solicitation in all its lower-tier subcontracts and supplier purchase orders. Clauses made inapplicable by the value, stated conditions, or type of Contract are self-deleting.

(b) The Contractor and its subcontractors at any tier are required to submit a fully executed SF 1413, Statement and Acknowledgment, upon award of each subcontract involving labor to acknowledge that the following clauses of the Contract have been included:

1. **Contract Work Hours and Safety Standards Act – Overtime Compensation – Construction**
2. **Davis-Bacon Act**
3. **Withholding of Funds**
4. **Payrolls and Basic Records**
5. **Apprentices and Trainees**
6. **Compliance with Copeland Act Requirements**
7. **Subcontracts (Labor Standards)**
8. **Contract Termination – Debarment**
9. **Disputes Concerning Labor Standards**
10. **Certification of Eligibility**
11. **Hanford Site Stabilization Agreement (HSSA)**

16. PNNL Contractor Environmental Safety and Health (CESH) Documents

CESH documents, including the CESH Manual, the and miscellaneous CESH forms can be accessed online at:
http://www.pnnl.gov/contracts/Forms.aspx?area=Procurement.

Hoisting and Rigging Requirements must follow DOE-STD-1090 found at:
https://www.standards.doe.gov/standards-documents/1000/1090-AStd-2011/@@images/file

Pacific Northwest NATIONAL LABORATORY

Proudly Operated by **Battelle** *Since 1965*

Part I – Schedule
IFB 629497 Section A - Contract Form

Solicitation, Offer and Award	**Invitation For Bid Number:** 629497	**Date Issued:** March 2, 2021	1 of 1

1. Description:

3410 Chiller #5 Installation/3410 Chiller CHW Pump

2. NAICS Code: 236220

3. Contract / Modification Number:

4. This Solicitation has been set aside for Small Business Concerns: YES ☐ NO ☒

5. Solicitation Method:

☒ Invitation for Bid (IFB) - *(Sealed Bid)*
☐ Request for Proposal (RFP) - *(Negotiated)*

6. Type of Contract:

☒ Fixed Price ☐ Labor-Hour / Time-and-Material ☐ Cost Reimbursable ☐ Indefinite Quantity

(a) SOLICITATION

Sealed offers for furnishing the supplies or services in the Schedule will be received at the place specified in box 7. In sealed bid solicitations "offer" and "offeror" mean "bid" and "bidder." All offers are subject to the terms and conditions in this solicitation.

7. Address Offer to:

Melissa.newell@pnnl.gov

8. Offer Due Date:

March 23, 2021, 3:00 PM PDT

9. For Information Call:
Melissa G. Newell
Office Phone: 509-372-4623
E-Mail Address: melissa.newell@pnnl.gov

10. TABLE OF CONTENTS

Invitation for Bid *(self-deletes upon award)*

Instructions to Bidders *(self-deletes upon award)*

Part I – The Schedule

☒	**Section A**	(A) Contract Form (and Rate Sheets)
☒	**Sections B - H**	(B) Supplies or Services, (C) Description of the Work, (D) Packaging and Marking, (E) Inspection and Acceptance, (F) Deliveries or Performance, (G) Contract Administration Data, (H) Special Contract Requirements

Part II – Contract Clauses

☒	**Section I**	Contract Clauses

Part III - List of Documents, Exhibits and Attachments

☒	**Section J**	Attachments & **Representations and Certifications**

(b) OFFER *(Completed by Offeror)*

Period for Acceptance of Offers. In compliance with the above, the undersigned agrees, if this offer is accepted within 90 **calendar days** from the date of receipt of offers specified above, to furnish any or all items upon which prices are offered at the price set opposite each item, delivered at the designated point(s), within the time specified.

11. Acknowledgement of Amendments
The Offeror acknowledges receipt of Solicitation Amendment Numbers: 1 ☐ 2 ☐ 3 ☐ 4 ☐ 5 ☐ 6 ☐ 7 ☐ 8 ☐ 9 ☐ 10 ☐

12. Company Name and Address:

13. Name and Title of Person Authorized to Sign Offer:

Name: _____

Title: _____

14. Offer Amount: YES ☒ NO ☐
Bid Summary Attached

Total Bid Price: $

15. Authorized Signature of the Offeror:

16. Offer Date:

(c) AWARD *(Completed by Battelle)*

17. Contract Price:	**18. Contract Number:**	**19. Contract Term:**	**20. Award Date:**
$		Through 7/30/2021	

21. Battelle Authorization: Your offer is hereby accepted as to the items listed above. This award consummates the contract which consists of the following documents: (a) the Battelle Solicitation, (b) your offer, and (c) this award/contract. No further contractual document is necessary.

(Name of Contracts Professional) *(Signature Authorizing Award)* *(Date)*

Bid Detail Sheet

(Submit This Sheet With The SOA)

CLIN 1: 3410 Chiller #5 Installation $_____

CLIN 2: 3410 Chiller CHW Pump $_____

TOTAL LUMP SUM BID (Enter in SOA Box 14) $_____

CLINS 1-2: The CLIN's shall be individually priced and included with the Contractors proposal (See accompanying Construction Pricing Form). Battelle reserves the right to award none, any or all or the Bid Options anytime within 90 days after award of the Base Contract at the prices included in the successful contractors bid. After 90 days, the CLIN pricing will become void.

BASIS OF AWARD: Award shall be made on the basis of the bottom line, lump sum, lowest priced responsive bid from a responsible pre-qualified contractor, totaling all CLIN's, 1-2, as a single bid price.

B. SERVICES AND PRICES/COST

1. **LUMP SUM Proposal:** The following Contract Line Item Numbers (CLIN's) and Additive Alternates shall be individually priced with the Contractor's Lump Sum Price:

CLIN 1: 3410 Chiller #5 Installation
CLIN 2: 3410 Chiller CHW Pump

BASIS OF AWARD: Award shall be made on the basis of the bottom line, lump sum, lowest priced technically responsive Proposal from a responsible pre-qualified contractor, totaling CLIN's 1 and 2 as found in the Construction Pricing Form.

C. DESCRIPTION OF THE WORK

1. **GENERAL.** Contractor shall perform all construction services, and provide all material, means and methods, equipment, tools and labor, necessary to complete the Work described in and reasonably inferable from the Contract Documents. The Work generally includes providing labor, materials, equipment, means and methods to complete the project.

2. **SPECIFIC.** The Work includes but is not limited to the specific scope elements listed in the Div. 1, Statement of Work and the drawings.

3. **SEQUENCING**: Work Sequencing and Interim Completion Milestones of identified portions of the Work shall be in accordance with the "Work Sequence" requirements of Division 1.

D. PACKAGING AND MARKING

(Reserved)

E. INSPECTION AND ACCEPTANCE

Battelle has the right to inspect and evaluate the Work performed or being performed under the Contract, and the premises where the Work is being performed, at all reasonable times and in a manner that will not unduly delay the Work. If Battelle performs inspection or evaluation on the premises of the Contractor or a Subcontractor, the Contractor shall furnish and shall require Subcontractors to furnish all reasonable facilities and assistance for the safe and convenient performance of these duties.

F. PERIOD OF PERFORMANCE

1. **DATE OF COMMENCEMENT.** The Work shall commence within **five (5)** calendar days of Contractor's receipt of Notice to Proceed (NTP) unless the parties mutually agree otherwise in writing.

2. **CONTRACT COMPLETION.**

(a) Work Sequencing/Interim Milestones. Work Sequencing, Interim Milestones and/or Substantial Completion of identified portions of the Work shall be in accordance with the "Work Sequence" requirements of Division 1.
Final Completion. No later than ***7/30/2021***

3. **TIME IS OF THE ESSENCE.** Battelle and Contractor mutually agree that time is of the essence with respect to the dates and times set forth in the Contract Documents.

G. CONTRACT ADMINISTRATION

1. **GENERAL.** The Contractor is solely responsible for strict compliance with all requirements of this Contract. No notice, communication or representation in any form or from any person other than a Battelle Contracts Representative shall be effective to relieve the Contractor of such obligation or to stop Battelle from enforcing the Contract exactly according to its written terms.

2. **CONTRACT AUTHORITY.** Contracting authority in Battelle is by formal delegation to named individuals. Contract authority for this Work has been delegated to:

Name: **Melissa G. Newell**
Title: **Contract Specialist**
Phone: **509-372-4623**
Email: **melissa.newell@pnnl.gov**

Notwithstanding any of the other provisions of the Contract, a named and authorized Battelle Contract Representative shall be the only individual on behalf of Battelle authorized to accept nonconforming Work; waive any requirement of this Contract; or take any action involving a change in the scope, price, terms, or conditions of this Contract.

3. **INTERPRETATION AND INTENT.** The Contract Documents are intended to permit the parties to complete the Work and all obligations required by the Contract Documents within the Contract Time(s) for the Contract Price. The Contract Documents are intended to be complementary and interpreted in harmony so as to avoid conflict, with words and phrases interpreted in a manner consistent with construction and design industry standards. In the event of any inconsistency, conflict, or ambiguity between or among the Contract Documents, the order of precedence shall be in accordance with the General Provisions.

The Contract Documents form the entire agreement between Battelle and Contractor and by incorporation herein are as fully binding on the parties as if repeated herein. No oral

representations or other agreements have been made by the parties except as specifically stated in the Contract Documents.

4. **INVOICING AND PAYMENT**. Submit invoices electronically to ap.invoices@pnnl.gov. Invoices may not be submitted more frequently than monthly. Payments can be made electronically by wire (foreign payments) or ACH (domestic payments) by filling out the ACH form, will be provided upon request. Failure to comply with electronic processing may result in a delay in payment. Payments Terms are Net 30 from the date received.

5. **TECHNICAL DIRECTION.** The Contractor's progress and compliance with the technical requirements of this Contract will be monitored for Battelle by a Technical Oversight Representative (TOR). The TOR is authorized to receive information, conduct inspections of Work in process and witness Contractor tests. He/she has no authority to: change or waive any provision of this Contract, including but not limited to Statements of Work, drawings, specifications and standards, whether attached or incorporated by reference; provide interpretations of any provision or requirement of this Contract; direct, advise, or recommend any particular course of conduct on the part of the Contractor; or create any legally binding commitment on behalf of Battelle. The TOR for this Work will be:

Name: **Jeff Pittman**
Title: **Project Manager/TOR**
Phone: **509-371-7056**
Email: **jeff.pittman@pnnl.gov**

Name: **Leslie Schwartz**
Title: **Construction Manager**
Phone: **509-375-6902**
Email: **leslie.schwartz@pnnl.gov**

H. SPECIAL REQUIREMENTS

1. PROPOSAL GUARANTEE [*Adapted from FAR 52.228-1 (Sept 1996)*]

(a) Failure to furnish a proposal guarantee in the proper form and amount, by the time set for opening of proposals, may be cause for rejection of the proposal.

(b) The proposer shall furnish a proposal guarantee in the form of a firm commitment, e.g., proposal bond supported by good and sufficient surety or sureties acceptable to Battelle, postal money order, certified check, cashier's check, or irrevocable letter of credit. Battelle will return proposal guarantees, other than proposal bonds—

(1) To unsuccessful proposers as soon as practicable after the opening of proposals; and

(2) To the successful proposer upon execution of Contractual documents and bonds (including any necessary coinsurance or reinsurance agreements), as required by the proposal as accepted.

(c) The amount of the proposal guarantee shall be 20% percent of the proposal price or **$3,000,000, whichever is less.**

(d) If the successful proposer, upon acceptance of its proposal by Battelle within the period specified for acceptance, fails to execute all Contractual documents or furnish executed bond(s) within 10 days after receipt of the forms by the proposer, Battelle may terminate the Contract for default.

(e) In the event the Contract is terminated for default, the proposer is liable for any cost of acquiring the Work that exceeds the amount of its proposal, and the proposal guarantee is available to offset the difference.

2. **PAYMENT AND PERFORMANCE BONDS FOR CONSTRUCTION WORK** *Adapted from FAR 52.228-15,*

Payment and Performance bonds, as well as Bid Bonds are required for this contract. “Original contract price” means the award price of the fixed price contract. Original contract price does not include the price of any options, except those options exercised at the time of contract award.

Contracts exceeding $150,000 (Miller Act):

(a) **Performance bonds** - Unless BATTELLE determines that a lesser amount is adequate for the protection of the Laboratory and the Government, the penal amount of performance bonds must equal

100 percent of the original contract price; and

If the contract price increases, an additional amount equal to 100 percent of the increase.

(b) **Payment bonds** - Unless BATTELLE makes a written determination supported by specific findings that a payment bond in this amount is impractical, the amount of the payment bond must equal –

100 percent of the original contract price; and

If the contract price increases, an additional amount equal to 100 percent of the increase.

The amount of the payment bond must be no less than the amount of the performance bond.

Reducing amounts. BATTELLE may reduce the amount of the security to support a bond, subject to the conditions of FAR 28.203-5(c) or 28.204(b).

ADDITIONAL BOND SECURITY

The Contractor shall promptly furnish additional security required to protect BATTELLE and persons supplying labor or materials under this contract if –

(a) Any surety upon any bond furnished with this contract becomes unacceptable to BATTELLE;

(b) Any surety fails to furnish reports on its financial condition as required by BATTELLE; or

(c) The contract price is increased so that the penal sum of any bond becomes inadequate in the opinion of BATTELLE.

3. IMPLEMENTATION OF THE HANFORD SITE STABILIZATION AGREEMENT

(a) The Hanford Site Stabilization Agreement (HSSA) for all construction work for the U. S. Department of Energy (DOE) at the Hanford Site, which is referenced in this Clause, consists of a Basic Agreement dated September 10, 1984, plus Appendix A, both of which may be periodically amended. The HSSA is hereby incorporated into this Contract by reference. The Contractor is responsible for obtaining the most current text from DOE.

(b) This Clause applies to employees performing work under Contracts (or subcontracts) administered by DOE which are subject to the *Davis-Bacon Act*, in the classifications set forth in the HSSA for work performed at the Hanford Site.

(c) Contractors and subcontractors at all tiers who are parties to an agreement(s) for construction work with a Local Union having jurisdiction over DOE construction work performed at the Hanford Site, or who are parties to a national labor agreement for such construction work, shall become signatory to the HSSA and shall abide by all of its provisions, including its Appendix A. Subcontractors at all tiers who have subcontracts with a signatory Contractor or subcontractor shall become signatory to the HSSA and shall abide by all of its provisions, including its Appendix A.

(d) Contractors and subcontractors at all tiers who are not signatory to the HSSA and who are not required under paragraph (c) above to become signatory to the HSSA, shall pay not less and no more than the wages, fringe benefits, and other employee compensation set forth in Appendix A thereto and shall adhere, except as otherwise directed by the Contracting Officer, to the following provisions of the Agreement:

(1) Article VII Employment (Section 2 only);
(2) Article XII Non-Signatory Contractor Requirements;
(3) Article XIII Hours of Work, Shifts, and Overtime;
(4) Article XIV Holidays;
(5) Article XV Wage Scales and Fringe Benefits (Sections 1 and 2 only);
(6) Article XVII Payment of Wages-Checking In and Out (Section 3 only);
(7) Article XX General Working Conditions; and
(8) Article XXI Safety and Health.
(e) The Contractor agrees to make no contributions in connection with this Contract to Industry Promotion Funds, or similar funds, except with the prior approval of the Contracting Officer.

(f) The obligation of the Contractor and its subcontractors to pay fringe benefits shall be discharged by making payments required by this Contract in accordance with the provisions of the amendments to the *Davis-Bacon Act* contained in the Act of July 2, 1964 (Public Law 88-349-78 Statutes 238-239), and U.S. Department of Labor regulations in implementation thereof (Code of Federal Regulations Title 29 Parts 1 and 5).

(g) The Contracting Officer may direct the Contractor to pay amounts for wages, fringe benefits, and other employee compensation if the HSSA, including its Appendix A, is modified by the involved parties.

(h) In the event of failure to comply with paragraphs (c) (d) (e) (f) and (g), or failure to perform any of the obligations imposed upon the Contractor and its subcontractors hereunder, the Contracting Officer may withhold any payments due to the Contractor and may terminate the Contract for default.

(i) The rights and remedies of the Government provided in this Clause shall not be exclusive and are in addition to any other rights and remedies of the Government provided by law or under this Contract.

(j) The requirements of this Clause are in addition to, and shall not relieve the Contractor of, any obligation imposed by other Clauses of this Contract, including Section I Clauses entitled, *FAR 52.222-4, Contract Work Hours and Safety Standards Act—Overtime Compensation, FAR 52.222-6, Davis-Bacon Act, FAR 52.222-7, Withholding of Funds, FAR 52.222-8, Payrolls and Basic Records, FAR 52.222-10, Compliance with Copeland Act Requirements,* and *FAR 52.222-12, Contract Termination – Debarment.*

(k) The Contractor agrees to maintain its proposal or proposal records showing rates and amounts used for computing wages and other compensation, and its payroll and personnel records during the course of work subject to this Clause, and to preserve such records for a period of three (3) years thereafter, for all employees performing such work. Such records will contain the name and address of each such employee, his/her correct classification, rate of pay, daily and weekly number of hours worked, and dates

and hours of the day within which work was performed, deductions made, and amounts for wages and other compensation covered by paragraphs (c) (d) (e) (f) and (g) hereof. The Contractor agrees to make these records available for inspection by the Contracting Officer and will permit him/her to interview employees during working hours on the job.

(l) The Contractor agrees to insert the provisions of this Clause including this paragraph

(k) In all subcontracts for the performance of work subject to the *Davis-Bacon Act*.

A copy of the *Hanford Site Stabilization Agreement* is located at: https://www.hanfordvitplant.com/hanford-site-stabilization-agreement

The U.S. Department of Labor wage determinations for the *Davis-Bacon Act* and S*ervice Contract Act* are located at: http://www.wdol.gov

4. Environmental Safety and Health - PNNL F&O Sponsored Work Sites (JSA) *(cl. 3113b - May 2020)*

A. In performing any work under this contract on property or facilities owned or controlled by Battelle that are identified as PNNL Work Sites (hereinafter "onsite"), the Contractor shall comply with all applicable federal, state and local environment, safety, and health laws and regulations. The Contractor shall also comply with 10 CFR 851, DOE Worker Safety and Health Program, and DEAR 970.5223-1, Integration of Environment, Safety and Health (ES&H) into Work Planning and Execution (Dec. 2000). In order to comply with the requirements of 10 CFR 851 and DEAR 970.5223-1, the Contractor shall be guided by the principles set forth below.

B. The Contractor shall perform work safely and in a manner that ensures adequate protection for employees, the public, and the environment, and shall be accountable for the safe performance of work. The Contractor shall exercise a degree of care commensurate with the work and the associated hazards. The Contractor shall ensure that management of ES&H functions and activities becomes an integral but visible part of the Contractor's work planning and execution processes. The Contractor shall, in the performance of work, ensure that--

1. Line management is responsible for the protection of employees, public, and the environment. Line management includes those contractor and subcontractor employees managing and supervising employees performing work.
2. Clear and unambiguous lines of authority and responsibility for ensuring (ES&H) are established and maintained at all organizational levels.
3. Personnel possess the experience, knowledge, skills, and abilities that are necessary to discharge their responsibilities, and shall retain records respecting such competency and qualifications, making them available upon request.

4. Resources are effectively allocated to address ES&H, programmatic, and operational considerations. Protecting employees, the public, and the environment is a priority whenever activities are planned and performed.
5. Before work is performed, the associated hazards are evaluated and a set of ES&H standards and requirements are established which, if properly implemented, provide adequate assurance that employees, the public, and the environment are protected from adverse consequences.
6. Administrative and engineering controls to prevent and mitigate hazards are tailored to the work being performed and associated hazards. Emphasis should be on designing the work and/or controls to reduce or eliminate the hazards and to prevent accidents and unplanned releases and exposures.

C. The Contractor, relative to the Statement of Work and contract specifications, shall be able to demonstrate through documentation and work practices that its performance of work under this contract--
   1. Fulfilled the scope of work as outlined in this contract
   2. Identified and analyzed specific, task-level hazards associated with the work
   3. Developed and implemented hazard controls related to the hazards
   4. Allowed the performance of work within the controls
   5. Provided feedback to Battelle and Contractor employees on adequacy of hazard controls

D. The Contractor shall perform work in accordance with a DOE-approved Worker Safety and Health Program (also referred to in the DEAR as a Safety Management Plan) as described below:
   1. The Contractor shall demonstrate well-established safety protocols applicable to the scope of work and consistent with the required elements stated in this clause. Prior to the initiation of any onsite work, the Contractor shall either--
      a. Accept and incorporate Battelle's PNNL Contractor Environment Safety and Health (CES&H) Manual as its own. The Battelle Contracts Representative can provide a hard copy of the manual upon request. In those cases where the Contractor's onsite activities are limited to an office or meeting environment, with no additional or unusual hazards, the CESH Manual requirements can be met through review of the PNNL Visitor Orientation Pamphlet. Both the CESH Manual and the Visitor Orientation Pamphlet are available on-line at http://www.pnnl.gov/contracts/Forms.aspx?area=Procurement.
      b. Submit its own 10 CFR 851 and DEAR 970.5223-1 compliant Worker Safety and Health Program (WSHP) document to the Battelle Contracts Representative. The Battelle Contracts Representative will coordinate the review and approval of the program document by DOE. The Contractor will be notified by the Battelle Contracts Representative of the program document's approval by DOE. Acceptance of the Contractor's program document will be at the sole discretion of DOE.

2. The Contractor will be provided a completed Division 01 General Requirements in the Invitation for Bid (IFB) or Request for Proposal (RFP). The completed Division 01 General Requirements which are a part of this contract, incorporate elements of effective job planning and facility hazard identification. Elements include identifying: the scope of work to be performed; facility operating requirements; potential hazards to Battelle and Contractor staff, the public and environment created by the work performed; hazard control methods and mitigation; and mechanisms to evaluate the adequacy of those controls. The Contract, General Provisions, Division 01 General Requirements, and ESH Manual are key control processes in the safe conduct of work at Battelle. The Contractor is expected to develop and submit for Battelle approval a Job Safety Analysis (JSA) evaluating their work sequence, hazards, and developing mitigation strategies for the identified hazards prior to initiating work onsite.

E. The Contractor shall perform the following additional hazard identification tasks consistent with an approved WSHP:

1. The Contractor shall be responsible for identifying all potential occupational exposures that its employees and the employees of its lower-tier subcontractors will be exposed to while performing any work under this contract.
2. The Contractor shall assure that its employees and those of any lower-tiered subcontractor are medically qualified to perform work associated with any potential occupational exposures that have been identified. Medical qualification and medical surveillance programs are the sole responsibility of the Contractor. In addition, the Contractor is responsible for maintaining any records associated with the administration of these programs.
3. For each of its employees and each of its lower-tier subcontract employees that the Contractor has identified as having potential occupational exposures that require enrollment in a medical surveillance or medical qualification program, the Contractor shall provide its Occupational Medical provider with the following information:
   a. Current information about actual or potential work-related site hazards (chemical, radiological, physical, biological, or ergonomic);
   b. Employee job-task and hazard analysis information, including essential job functions;
   c. Actual or potential work-site exposures of each employee; and
   d. Personnel actions resulting in a change of job functions such that a change of hazards, or exposures results.
4. For each of its employees and each of its lower-tier subcontract employees, a copy of the exposure information provided to the Contractor's occupational medical provider shall be submitted to the Battelle Contracts Representative and approved by Battelle before any of these employees begin work under this contract.

F. The Contractor shall notify the Battelle Contracts Representative immediately of any OSHA-recordable injuries/illnesses, any "off-normal occurrences," or Government property

damaged, that the Contractor determines to have occurred in the course of operations onsite and shall furnish such further information as the Battelle Contracts Representative may require. An "off-normal occurrence" is any unplanned or unexpected event, including near misses, or the discovery of a deficiency in a procedure, plan, or system that has real or potentially undesirable consequences to personnel, equipment, facilities, the environment, and/or programs.

G. The Contractor's onsite ES&H activities will be subject to review by the Technical Administrator of this contract. Other representatives of Battelle may conduct periodic inspections of the Contractor's equipment, work and storage areas for compliance with the applicable ES&H requirements. The Battelle Contracts Representative will notify the Contractor by a written Notice of Non-compliance of any observed non-compliance with applicable ES&H requirements. The Contractor shall immediately take appropriate corrective action. The Contractor shall advise the Battelle Contracts Representative, in writing, within five (5) working days of the corrective action taken on any safety non-compliance noted on the written Notice of Non-compliance. If the Contractor fails or refuses to correct the safety non-compliance, Battelle may perform, or cause to be performed, the necessary corrective work and unilaterally charge the Contractor for the cost thereof. Such charges will be deducted from payments otherwise due the Contractor under this contract.

H. The Contractor shall promptly evaluate and resolve any non-compliance with applicable ES&H requirements. If the Contractor fails to provide resolution or if, at any time, the Contractor's acts or failure to act causes substantial harm or an imminent danger to the environment, or health and safety of employees or the public, the Battelle Contracts Representative may issue an order stopping work in whole or in part and the Contractor shall be liable for the delay and any costs thereby incurred. Any stop-work order issued by Battelle under this clause (or issued by the Contractor to a subcontractor in accordance with this clause) shall be without prejudice to any other legal or contractual rights of Battelle. In the event that the Battelle Contracts Representative issues a stop-work order, an order authorizing the resumption of the work may be issued at the discretion of the Battelle Contracts Representative. The Contractor shall not be entitled to an extension of time, or additional cost or fee, or damages by reason of, or in connection with, any work stoppage ordered in accordance with this clause.

I. Employee Concerns Program

1. The Contractor, its agents, employees or subcontractors, are entitled to use the Battelle Employee Concerns Program and Hotline (509) 375-3999. The Hotline operates 24 hours per day, 7 days a week. Messages may be left anonymously, and all concerns are handled with confidentiality to the maximum extent possible. Employee concerns may also be submitted in writing to the Battelle Employee Concerns Office, Battelle, Pacific Northwest National Laboratory, P.O. Box 999, K1-42, Richland, Washington, 99352, or in person at the Staff Concerns Office, Battelle's Research Operation Building during normal business hours, Monday through Friday 7:30 a.m. to 4:30 p.m.

2. For the purpose of this document, allegations, concerns, and complaints are handled in a like manner and are referred to collectively as "employee concerns." A concern can consist of a declaration, statement, or assertion of impropriety or inadequacy on the part of one's employer or others at a DOE Site that has affected (or threatens to affect) aspects of operations, such as the environment, health, safety, quality, or security, and may include fraud, mismanagement, waste, or abuse of authority.
3. No retaliation or retribution shall be taken toward any individual as a result of filing an employee concern consistent with 10 CFR 708.

J. Civil Penalties and Indemnification

1. The 2002 Bob Stump National Defense Authorization Act amended the Atomic Energy Act by adding section 234C "Worker Health and Safety Rules for Department of Energy Nuclear Facilities." It required DOE to promulgate a worker safety and health rule, published in the Federal Register on February 9, 2006, as 10 CFR 851. It establishes worker safety and health requirements that govern the conduct of contractor activities at both nuclear and non-nuclear DOE Sites. Contractors that fail to comply with the Rule are subject to civil penalties or contract penalties.
2. The Contractor assumes full responsibility and shall indemnify, hold harmless, and defend Battelle, its directors, officers, and employees from any civil or contractual liability under section 234C of the Atomic Energy Act of 1954, as amended, or the implementing regulations, arising out of the activities of the Contractor, its subcontractors, suppliers, agents, employees, and their officers, or directors. The Contractor's obligation to indemnify and hold harmless shall expressly include attorney fees and other reasonable costs of defending any action or proceeding instituted under section 234C or DOE's implementing regulations.

K. Contractor is responsible to ensure that its direct hired and Subcontractor employees who will work on the Site be free of physical or cognitive impairment resulting from the use of alcohol or drugs, including legal drugs, when working or involved in any activity on Battelle/PNNL premises. In order to achieve the federal Drug Free Workplace Act standards, Battelle/PNNL prohibits its non-staff and subcontractors from illegally manufacturing, distributing, selling, possessing, or using illegal drugs, including marijuana, or being under the influence of alcohol while on Battelle/PNNL premises or during PNNL activities. Individuals suspected of being under the influence of any substance, legal or illegal, that may impair their ability to perform their duties are subject to termination of their work agreements and/or having access to the Battelle/PNNL premises revoked. If Battelle, or the Contractor or Subcontractor believes that a Contractor or Subcontractor employee's job performance is being adversely affected by drug or substance (including alcohol) use, Battelle may direct the Contractor to remove the employee. Examples of behavior or circumstances indicating possible drug or substance abuse are observed use, possession, sale or delivery, or credible information that an individual is using suspected of being impaired by drugs or abusing alcohol, or an accident or injury.

L. The Contractor is responsible for its subcontractors' compliance with the ES&H requirements of this contract. The Contractor shall include a clause substantially the same as this clause in lower-tier subcontracts involving work at on property or facilities owned or controlled by Battelle that are identified as PNNL Work Sites. Such subcontracts shall provide for the right to stop work under the conditions described herein.

5. Quality Requirements
Welding/Brazing *(cl. QA-171 / May 2019)*
Welded or brazed items shall be fabricated by qualified and certified personnel utilizing qualified procedures based on contract-specified nationally recognized welding or brazing codes and standards in effect on the contract date.
The Contractor or the subcontractor that the quality affecting work will be performed under shall maintain records of qualifications and procedures including welder qualification and certification documentation. Welder qualifications and certifications shall include documented evidence of continued performance of each welding process that the welder performs under this contract.
Pre-Work Evaluation Requirement: Prior to performance of any welding, Battelle's Acquisition Quality Support Services must evaluate the supplier's documentation for compliance with contractual requirements. At least 15 working days prior to performance of any welding, the Contractor shall deliver to Battelle's Contracts Representative for review and acceptance the following documentation:

- Welding procedure specification for each applicable welding process.
- Procedure qualification record for each applicable welding process and/or reference to applicable pre-qualified procedures indicating applicable code/standard and section.
- Welder qualification records for personnel performing the welding as required by the contract, including documented evidence of continued performance of each welding processes performed under this contract. Personnel shall have demonstrated sufficient education, experience, and training through documented test results or a demonstration of capabilities.
- Welder logs, providing evidence of continuous use of each process performed under this contract. Personnel shall have performed welding activities in the last 12 months, or as outlined in the applicable standard and must provide evidence of continuing satisfactory performance for each process.

Unless otherwise specified, Contractor shall provide all documents required by this contract to the Battelle Contracts Representative on or before the required due date for each contract deliverable. Battelle shall have the right to reject, as not in conformity with the requirements of this contract, any supplies or services for which all required reports, procedures, or certifications are not delivered.

Visual Weld Inspection *(cl. QA-177 / May 2019)*
Visual Weld Inspection (VWI) procedures shall be in accordance with and address the requirements of the applicable code or standard referenced in the contract. Unless specified otherwise in Contract documents, VWI personnel shall be certified in accordance with American Welding Society (AWS) requirements for a Certified Welding Inspector (CWI) or with American Society of Nondestructive Testing standard SNT-TC-1A or CP-189, latest version in effect unless an earlier edition is specified in the contract.

Pre-Work Evaluation Requirement: Prior to performance of any VWI, Battelle's Acquisition Quality Support Services must evaluate the supplier's documentation for compliance with contractual requirements. At least 15 working days prior to performing any VWI, the Contractor shall deliver to Battelle Contracts Representative for review and acceptance the following documentation:

- VWI Procedure(s) (e.g., qualification/certification procedures and VWI method/examination procedures)
- Personnel certifications including the results of required physical examinations (e.g., eye examine).
- The qualifications of VWI inspection and test personnel shall be documented in writing under the entity (e.g., Contractor's or the subcontractor that the quality affecting work will be performed to). The following information is to be provided:
    - employer's name
    - identification of person being certified
    - activities certified to perform
    - basis of qualification
    - education, experience, indoctrination, and training
    - test results, where applicable
    - capability demonstration results
    - results of periodic evaluation
    - results of physical examination (e.g., eye examination), when required
    - signature of employer's designated representative who is responsible for such certification
    - date of certification or recertification and certification expirations

Test Report: Visual Weld Inspection Report
Contractor shall submit VWI report(s) containing the actual results of the examination required by this contract. The report(s) shall identify what was examined by specific section, joints, views, weld map and/or serial numbers, and shall reference the qualified procedures used and specific code, standard or contract-specific acceptance criteria (e.g., AWS D1.1, Section 6.9, Table 1). The report(s) shall contain information as required by the governing code, standard or specific contract requirement.

Each VWI report shall be legible, reproducible, and contain the following:

1. The contract number
2. A clear identification of the item inspected, including, but not limited to, the use of serial, lot, batch, heat, or mill numbers
3. Date of the inspection
4. Type of observation
5. Results or acceptability
6. Reference to information on action taken in connection with any nonconformances identified
7. The report(s) shall be signed by the AWS-CWI who performed the examination
8. The report(s) shall be signed by the AWS-CWI who interpreted the results

Unless otherwise specified, Contractor shall provide all documents required by this contract to the Battelle Contracts Representative on or before the required due date for each contract

deliverable. Battelle shall have the right to reject, as not in conformity with the requirements of this contract, any supplies or services for which all required reports, procedures, or certifications are not delivered.

Test Report: Pressure and/or Leak Test *(cl. QA-189 / November 2016)*
Contractor shall submit a Pressure and/or Leak Test Report(s) that are legible, reproducible, and contain the following:

1. Battelle contract number
2. A clear identification of the item or component tested, including as applicable,
   - drawing number
   - sketch number
   - item and/or component number
   - serial/lot/batch and/or heat number
3. Acceptance criteria
4. Date of test
5. Certification level (as applicable) and name of person conducting and/or accepting results of test
6. Test procedure number and revision
7. Test method or technique
8. Actual test results
9. Description of test instruments used (e.g., gauges, pressure relief devices, standard leaks, etc.) including:
   - ranges
   - leak rates
   - identification
   - calibration due dates
10. Test conditions, test pressure, tracer gases and gas concentrations
11. Temperature measuring devices, identification, and actual test temperatures, as applicable to the method or technique being performed.
12. Description and/or sketch showing method or technique setup
13. Action(s) taken in connection with any deviations
14. The signature, date, and function of the individual accepting responsibility for the content of the report. Clear identification if an electronic signature is used.

Unless otherwise specified, Contractor shall provide all documents required by this contract to the Battelle Contracts Representative on or before the required due date for each contract deliverable. Battelle shall have the right to reject, as not in conformity with the requirements of this contract, any supplies or services for which all required reports, procedures, or certifications are not delivered.

Contractor Nonconformance Report *(cl 360 -- Nov 2014)*
Contractor is required to report to the Battelle Contracts Representative any nonconformance or deviation from Battelle's technical requirements. To comply with the reporting requirements the Contractor shall complete Battelle's Contractor Nonconformance Report (CNCR) which is available at http://www.pnnl.gov/contracts/Forms.aspx?area=Procurement. The completed CNCR shall be submitted by the Contractor to the Battelle Contracts Representative to request Battelle to accept a deliverable not meeting all of Battelle's technical requirements. The decision

whether to accept or reject such a request shall be within Battelle's sole discretion, and the Contractor shall not proceed in accordance with the requested deviation or present for inspection or acceptance any product produced in accordance with such deviation, unless and until Battelle's written approval on the CNCR is received by the Contractor. Battelle's rights and remedies provided in this clause are in addition to any and all other rights and remedies that Battelle may have under Federal or State law.

****** END OF SECTION ******

GENERAL PROVISIONS

Fixed Price Construction Contracts

For the Pacific Northwest National Laboratory
Operated by Battelle Memorial Institute

Battelle Memorial Institute has executed and is engaged in the performance of Prime Contract DE-AC05-76RL01830 with the United States Department of Energy (DOE), for the management, operation, and maintenance of the Pacific Northwest National Laboratory (PNNL) in Richland, Washington. This contract is entered into in furtherance of the performance of the work provided in the Prime Contract, and is subject to the following general provisions:

_____ 1
GENERAL _____ 2
1. Introduction _____ 2
2. Definitions _____ 3
3. Acceptance of Contract Terms and Conditions (cl 302 – October 2008) _____ 3
4. Order of Precedence - Construction _____ 3
5. Assignment (cl 357 - Jan 2003) _____ 3
6. Pacific Northwest National Laboratory or Battelle Name (cl 374 – October 2008) _____ 3
7. Insurance - Construction _____ 3
8. Labor Harmony _____ 4
9. Registration, Representations & Certifications _____ 4
10. Limitations on Subcontracting (FAR 52.219-14, Nov 2011) _____ 5
11. Performance and Payment Bonds—Construction (FAR 52.228-15, Oct 2010) _____ 5
12. Federal, State, and Local Taxes (FAR 52.229-3, Apr 2003) _____ 5
13. Payments – Construction _____ 6
14. Suspension of Work (FAR 52.242-14, Apr 1984) _____ 7
15. Stop-Work Order (FAR 52.242-15, Aug 1989) _____ 7
16. Changes (FAR 52.243-4, June 2007) _____ 8
17. Pricing of Adjustments - Construction _____ 8
18. Termination for Convenience of the Government (Fixed-Price) (FAR 52.249-2, May 2004) _____ 9
19. Default (Fixed-Price Construction) (FAR 52.249-10, Apr 1984) _____ 11
20. Failure to Perform - Construction _____ 11
21. Excusable Delays (FAR 52.249-14, Apr 1984) _____ 12
22. Disputes (FAR 52.233-1, May 2014) _____ 12
23. Indemnity (cl. 351C – Aug 2009) _____ 13
24. Public Release of Information _____ 13
25. Prohibition on Participation in Foreign Government-Sponsored Talent Recruitment Programs of a Foreign Country of Risk (cl.312 – December 2020) _____ 13
26. Unclassified Foreign Visits and Assignments (cl. 3114 –October 2020) _____ 14
27. Rights to Proposal Data _____ 14
28. Bankruptcy (cl. 318 - Nov 2008) _____ 14
29. Laws, Regulations, DOE Directives, and Indemnification (cl. ci-3121 – Mar 2014) _____ 14
MATERIAL REQUIREMENTS AND QUANTITIES _____ 14
30. Material Requirements (FAR 52.211-5, Aug 2000) _____ 14
31. Brand Name or Equal (FAR 52.211-6, Aug 1999) _____ 15
32. Variation in Estimated Quantity (FAR 52.211-18, Apr 1984) _____ 15
ENVIRONMENTAL SAFETY AND HEALTH _____ 15
33. Environment, Safety, and Health Requirements - Offsite (cl. 3113e – May 2012) _____ 15
34. Environment, Safety, and Health Requirements (10 CFR 851) _____ 15
35. Notifications and Investigations _____ 15
36. Solid Waste Management _____ 16
37. Maintenance, Service, Repair or Disposal of Refrigeration Equipment and Air Conditioners (FAR 52.223-12, June 2016) 16
38. Accident Prevention (FAR 52.236-13 Nov 1991) _____ 16

39. Sustainable Acquisition Requirements (cl. 381 – Oct 2015) 17
QUALITY ASSURANCE 17
40. Quality Assurance 17
41. Suspect/Counterfeit Items 17
42. Contractor Inspection Requirements (FAR 52.246-1, Apr 1984) 18
43. Inspection of Construction (FAR 52.246-12, Aug 1996) 18
44. Responsibility for Supplies (FAR 52.246-16, Apr 1984) 19
45. Warranty of Construction (FAR 52.246-21, Mar 1994) 19
CONSTRUCTION 19
46. Site Access Control 19
47. Prohibited Articles 21
48. Work Limitations, Restrictions & Requirements 21
49. Performance of Work by the Contractor (FAR 52.236-1, Apr 1984) 23
50. Differing Site Conditions (FAR 52.236-2, Apr 1984) 23
51. Site Investigation and Conditions Affecting the Work (FAR 52.236-3, Apr 1984) 23
52. Physical Data (FAR 52.236-4, Apr 1984) 23
53. Material and Workmanship (FAR 52.236-5, Apr 1984) 23
54. Superintendence by the Contractor (FAR 52.236-6, Apr 1984) 24
55. Permits and Responsibilities (FAR 52.236-7, Nov 1991) 24
56. Other Contracts (FAR 52.236-8, Apr 1984) 24
57. Protection of Existing Vegetation, Structures, Equipment, Utilities, and Improvements (FAR 52.236-9, Apr 1984) 24
58. Operations and Storage Areas (FAR 52.236-10, Apr 1984) 24
59. Use and Possession Prior to Completion (FAR 52.236-11, Apr 1984) 24
60. Cleaning Up (FAR 52.236-12Apr 1984) 25
61. Availability and Use of Utility Services (FAR 52.236-14, Apr 1984) 25
62. Schedules for Construction Contracts (FAR 52.236-15, Apr 1984) 25
63. Layout of Work (FAR 52.236-17, Apr 1984) 25
64. Organization and Direction of the Work (FAR 52.236-19, Apr 1984) 25
65. Specifications and Drawings for Construction (FAR 52.236-21, Feb 1997) 25
66. Back-Charges 26
67. Vendor Data Requirements 27
68. Cooperation with Others 27
CLAUSES INCORPORATED FOR CONTRACTS COVERED BY CONSTRUCTION WAGE RATE REQUIREMENTS – LABOR STANDARDS 27
69. Contract Work Hours and Safety Standards – Overtime Compensation (FAR 52.222-4, Mar 2018) 27
70. Construction Wage Rate Requirements (FAR 52.222-6, Aug 2018) 28
71. Withholding of Funds (FAR 52.222-7, May 2014) 29
72. Payrolls and Basic Records (FAR 52.222-8, Aug 2018) 30
73. Apprentices and Trainees (FAR 52.222-9, July 2005) 30
74. Compliance with Copeland Act Requirements (FAR 52.222-10, Feb 1988) 31
75. Subcontracts (Labor Standards) (FAR 52.222-11, May 2014) 31
76. Contract Termination—Debarment (FAR 52.222-12, May 2014) 32
77. Compliance with Construction Wage Rate Requirements and Related Act Regulations (FAR 52.222-13, May 2014) 32
78. Disputes Concerning Labor Standards (FAR 52.222-14, Feb 1988) 32
79. Notice of Labor Disputes (cl. 359 - Feb 1997) 32
80. Certification of Eligibility (FAR 52.222-15, May 2014) 32
81. Compliance with Contractor Code of Business Ethics and Conduct (FAR 52.203-13 Oct 2015) 32
CLAUSES INCORPORATED BY REFERENCE 33

GENERAL

1. Introduction

A. The construction covered by this Contract shall be furnished subject to the terms and conditions set forth herein.

B. This Contract is the complete and exclusive statement of the terms of the agreement between Contractor and Battelle.

C. No modification of this Contract (including any addition, deletion, or other modification proposed in

Contractor's acceptance) shall be binding on Battelle unless agreed to by an authorized Battelle Contracts representative in writing.

D. If any of the clauses included or incorporated into these General Provisions do not apply to the Contract Work, such clauses are considered to be self-deleting.

2. Definitions

As used throughout this Contract, the following terms shall have the meaning set forth below:

A. "Battelle" means Battelle Memorial Institute, in the performance of its prime Contract with The United States of America and includes any duly authorized representative thereof acting within authorized limits.

B. "Contracting Officer" means the Battelle Contracts Representative.

C. "Contractor" means the entity under Contract with Battelle responsible for execution of all construction work described within the Contract documents.

D. "Construction worksite," "Site of the work," and "Site" are equivalent terms for purpose of this Contract and have the meaning given in 10 CFR 851 for Construction worksite as follows:

E. "Construction worksite is the area within the limits necessary to perform the work described in the construction procurement or authorization document. It includes the facility being constructed or renovated along with all necessary staging and storage areas, as well as adjacent areas subject to project hazards."

F. "DOE" means U. S. Department of Energy or any duly authorized representative thereof.

G. "DEAR" means Department of Energy Acquisition Regulation, including all amendments and changes thereto in effect on the date of issuance of this Contract.

H. "FAR" means Federal Acquisition Regulation, including all amendments and changes thereto in effect on the date of issuance of this Contract.

I. "Government" means The United States of America, and shall include Battelle to the extent necessary to enable Battelle to administer this Contract and to perform its obligations under its Government prime Contract.

J. "Subcontract(s)" and "Subcontractor(s)" includes this Contract when used in a FAR or DEAR clause referring to a prime and Subcontractor relationship. Otherwise, it means Contractor's lower tier Subcontract(s) and Subcontractor(s), respectively. The term "Subcontract" includes purchase orders and changes, modifications, or amendments to Subcontracts and purchase orders.

3. Acceptance of Contract Terms and Conditions (cl 302 – October 2008)

The Contractor, by signing this Contract or performing the services and/or delivering the supplies identified herein, agrees to comply with all the terms and conditions and all specifications and other documents that this Contract incorporates by reference or attachment. Battelle hereby objects to any terms and conditions contained in any acknowledgment of this Contract that are different from or in addition to those mentioned in this document. Failure of Battelle to enforce any of the provisions of this Contract shall not be construed as evidence to interpret the requirements of this Contract, nor a waiver of any requirements, nor of the right of Battelle to enforce each and every provision. All rights and obligations shall survive final performance of this Contract.

4. Order of Precedence - Construction

Any inconsistency in this solicitation or Contract shall be resolved by giving precedence in the following order:

A. Contract Agreement (excluding specifications)

B. Representations and other instructions

C. General Provisions

D. Division 1 Administrative Requirements

E. Specifications

F. Drawings

5. Assignment (cl 357 - Jan 2003)

Battelle may assign this Contract to the U.S. Department of Energy (DOE) or a designee of DOE. Upon receipt by the Contractor of written notice that DOE or its designee has been assigned this Contract, Battelle shall be relieved of all responsibility hereunder, and the Contractor shall thereafter look solely to the assignee for performance of Battelle's obligations. The Contractor shall not assign this Contract or any interest therein, nor claims thereunder without the prior written consent of Battelle or Battelle's assignee. Any assignment, by operation of law or otherwise, without prior written consent of Battelle or Battelle's assignee shall be void.

6. Pacific Northwest National Laboratory or Battelle Name (cl 374 – October 2008)

The Contractor agrees not to use Pacific Northwest National Laboratory's or Battelle's name or identifying characteristics for advertising, sales promotion, raising of capital, recommending investments or other publicity purposes that implies endorsement by the Pacific Northwest National Laboratory or Battelle without the prior written consent of Battelle. This clause shall survive the termination or expiration of this contract.

7. Insurance - Construction

A. The Contractor shall, at its sole cost, obtain and maintain in force for the duration of the Contract (including the Guarantee period) insurance of the following types, with limits not less than those set forth below.

B. ***Schedule of Minimum Insurance Types and Amounts***.

1. Workers Compensation Insurance shall be at a minimum as indicated below or per the statutory limits of the State where the work is to be performed, whichever is higher:

   (i) $1,000,000 Minimum per accident;

   (ii) $1,000,000 minimum per employee for bodily injury and disease.

2. General Liability Insurance:

   (i) $5,000,000 general aggregate limit;

   (ii) $5,000,000 per occurrence for bodily injury

and property damage;

(iii) $5,000,000 per occurrence for personal and advertising injury liability;

(iv) $5,000,000 per occurrence for products/completed operations liability. The products/completed operations liability insurance shall be maintained in full force and effect for not less than three years following completion of Contractor's services.

3. Vehicle Liability Insurance:

   $2,000,000 combined single limit of liability for bodily injury and property damage per occurrence, covering the use of all owned, non-owned, and hired automobiles.

4. Tools and Equipment Insurance (Equipment Floater Insurance)

   Contractor shall carry and maintain Tools and Equipment Insurance during performance of its services under the Contract, covering physical damage to or loss of all major tools and equipment, construction office trailers, and their contents, and vehicles for which Contractor is responsible.

5. Builders Risk Insurance:

   Contractor shall carry and maintain Builder's Risk Insurance covering loss or damage to materials and equipment furnished by Contractor that is incorporated into the completed facility. Contractor shall be responsible for the payment of the applicable deductible (which will not exceed $5,000 per occurrence) for each loss to such materials or equipment which are in the care, custody and control of the Contractor.

C. ***Proof of Insurance***. Before commencing work, the Contractor shall furnish written proof to Battelle that the required insurance has been obtained. The policies evidencing the required insurance shall contain an endorsement to the effect that any cancellation or material change affecting Government or Battelle's interests shall not be effective for such period as the laws of the State in which this Contract is to be performed specify or until 30 days after the insurer or the Contractor gives written notice to Battelle, whichever period is longer.

D. ***Subcontractor's Commercial General Liability Insurance and Vehicle Liability Insurance***. The Contractor shall insert the substance of this clause, including this paragraph, in Subcontracts under this Contract that require work on either a Battelle or Government installation, and shall require Subcontractors to provide and maintain the kinds and minimum amounts of insurance required in the Schedule. The Contractor shall maintain a copy of all Subcontractors' proofs of required insurance, and shall make copies available to Battelle upon request.

E. ***Waiver of Subrogation***. The Contractor hereby releases the Government and Battelle, including their directors and employees, and shall cause Contractor's Insurers to waive their rights of subrogation against such released parties, for losses or claims for bodily injury, property damage or other insured claims arising out of Contractor's performance under the Contract.

F. ***Claims***. In the event that claims in excess of the insured amounts provided are filed by reason of any operations under the services provided by the Contractor, the amount of excess of such claims, or any portion thereof, may be withheld from payment due until such time as the Contractor shall furnish such additional security covering such claims as may be determined by Battelle.

8. Labor Harmony

A. Battelle maintains a neutral position regarding Project Labor Agreements. This Contract Work does not mandate nor preclude participation in a Project Labor Agreement if said participation promotes the economy and efficiency in Federal procurement ascribed by Executive Order titled, "Use of Project Labor Agreements for Federal Construction Projects," dated 2/6/09.

B. In accordance with applicable prior labor agreements, laws, regulations, codes and standards, the Contractor shall furnish labor that can work in harmony with all other elements of labor employed or to be employed on the work. Without limiting the generality of the foregoing, Labor Harmony shall include the provision of labor that will not cause, cause to be threatened or give rise to either directly or indirectly, any work disruption, slowdowns or stoppages by employees of other Contractors, while performing any work or activities incidental thereto.

C. Award of any construction Contract is contingent upon the Contractor having an acceptable Plan for harmonizing labor on the Battelle Work site.

D. The Contractor agrees to insert the substance of this clause, including paragraph (c), in every Subcontract issued in performance of this Contract.

9. Registration, Representations & Certifications

A. All Contractors shall be registered in the governments Central Contractor Registration (CCR) database. Offerors and Contractors may obtain information on registration and annual confirmation requirements via the internet at http://www.ccr.gov or by calling 1-888-227-2423, or 269-961-5757.

   1. By submission of an offer, the offeror acknowledges the requirement to be registered in the CCR database prior to award, during performance, and through final payment of any Contract, basic agreement, basic ordering agreement, or blanket purchasing agreement resulting from this solicitation.

   2. Failure to register shall be grounds for rejection of Contractor bids and proposals.

B. The Contractor is responsible for the accuracy and completeness of the data within the CCR database, and for any liability resulting from Battelle's reliance on inaccurate or incomplete data. To remain registered in the CCR database after the initial registration, the Contractor is required to review and update on an annual basis from the date of initial registration or subsequent updates its information in the CCR database to ensure it is current, accurate and complete. Updating information in the CCR does not alter the terms and conditions of this Contract and is not a substitute for a properly executed Contractual document.

C. In addition to registering in CCR, the offeror must also complete an annual representations and certifications electronically via the Online Representations and Certifications Application (ORCA) website at http://orca.bpn.gov. The Contractor is required to review and verify prior to submission of any offer that the representations and certifications currently posted electronically have been entered or updated within the last 12 months, and are current, accurate, complete, and applicable to this solicitation (including the business size standard applicable to the North American Industry Classification Code [NAICS] referenced for this solicitation), as of the date of this offer.

10. Limitations on Subcontracting (FAR 52.219-14, Nov 2011)

A. This clause does not apply to the unrestricted portion of a partial set-aside.

B. *Applicability*. This clause applies only to—

1. Contracts that have been set aside or reserved for small business concerns or 8(a) concerns;

2. Part or parts of a multiple-award contract that have been set aside for small business concerns or 8(a) concerns; and

3. Orders set aside for small business or 8(a) concerns under multiple-award contracts as described in 8.405-5 and 16.505(b)(2)(i)(F).

C. By submission of an offer and execution of a contract, the Offeror/Contractor agrees that in performance of the contract in the case of a contract for—

1. Services (except construction). At least 50 percent of the cost of contract performance incurred for personnel shall be expended for employees of the concern.

2. Supplies (other than procurement from a non-manufacturer of such supplies). The concern shall perform work for at least 50 percent of the cost of manufacturing the supplies, not including the cost of materials.

3. General construction. The concern will perform at least 15 percent of the cost of the contract, not including the cost of materials, with its own employees.

4. Construction by special trade contractors. The concern will perform at least 25 percent of the cost of the contract, not including the cost of materials, with its own employees.

11. Performance and Payment Bonds—Construction (FAR 52.228-15, Oct 2010)

A. *Definitions*. As used in this clause—

"Original contract price" means the award price of the contract; or, for requirements contracts, the price payable for the estimated total quantity; or, for indefinite-quantity contracts, the price payable for the specified minimum quantity. Original contract price does not include the price of any options, except those options exercised at the time of contract award.

B. *Amount of required bonds*. Unless the resulting contract price is $150,000 or less, the successful offeror shall furnish performance and payment bonds to the Contracting Officer as follows:

1. Performance bonds (Standard Form 25). The penal amount of performance bonds at the time of contract award shall be 100 percent of the original contract price.

2. Payment Bonds (Standard Form 25A). The penal amount of payment bonds at the time of contract award shall be 100 percent of the original contract price.

3. Additional bond protection.

(i) The Government may require additional performance and payment bond protection if the contract price is increased. The increase in protection generally will equal 100 percent of the increase in contract price.

(ii) The Government may secure the additional protection by directing the Contractor to increase the penal amount of the existing bond or to obtain an additional bond.

C. *Furnishing executed bonds*. The Contractor shall furnish all executed bonds, including any necessary reinsurance agreements, to the Contracting Officer, within the time period specified in the Bid Guarantee provision of the solicitation, or otherwise specified by the Contracting Officer, but in any event, before starting work.

D. *Surety or other security for bonds*. The bonds shall be in the form of firm commitment, supported by corporate sureties whose names appear on the list contained in Treasury Department Circular 570, individual sureties, or by other acceptable security such as postal money order, certified check, cashier's check, irrevocable letter of credit, or, in accordance with Treasury Department regulations, certain bonds or notes of the United States. Treasury Circular 570 is published in the *Federal Register* or may be obtained from the:

U.S. Department of the Treasury
Financial Management Service
Surety Bond Branch
3700 East West Highway, Room 6F01
Hyattsville, MD 20782.
Or via the internet at
http://www.fms.treas.gov/c570/.

E. *Notice of subcontractor waiver of protection (40 U.S.C. 3133(c))*. Any waiver of the right to sue on the payment bond is void unless it is in writing, signed by the person whose right is waived, and executed after such person has first furnished labor or material for use in the performance of the contract.

12. Federal, State, and Local Taxes (FAR 52.229-3, Apr 2003)

A. As used in this clause—

"After-imposed Federal tax" means any new or increased Federal excise tax or duty, or tax that was exempted or excluded on the contract date, but whose exemption was later revoked or reduced during the contract period on the transactions or property covered by this contract that the Contractor is required to pay or bear as the result of legislative, judicial, or administrative action taking effect after the contract date. It does not include social security tax or other employment taxes.

"After-relieved Federal tax" means any amount of Federal excise tax or duty, except social security or other employment taxes, that would otherwise have been payable on the transactions or property covered by this contract, but which the Contractor is not required to pay or bear, or for which the Contractor obtains a refund or drawback, as the result of legislative, judicial, or administrative action taking effect after the contract date.

"All applicable Federal, State, and local taxes and duties" means all taxes and duties, in effect on the contract date, that the taxing authority is imposing and collecting on the transactions or property covered by this contract.

"Contract date" means the date set for bid opening or, if this is a negotiated contract or a modification, the effective date of this contract or modification.

"Local taxes" includes taxes imposed by a possession or territory of the United States, Puerto Rico, or the Northern Mariana Islands, if the contract is performed wholly or partly in any of those areas.

B. The contract price includes all applicable Federal, State, and local taxes and duties.

C. The contract price shall be increased by the amount of any after-imposed Federal tax, provided the Contractor warrants in writing that no amount for such newly imposed Federal excise tax or duty or rate increase was included in the contract price, as a contingency reserve or otherwise.

D. The contract price shall be decreased by the amount of any after-relieved Federal tax.

E. The contract price shall be decreased by the amount of any Federal excise tax or duty, except social security or other employment taxes, that the Contractor is required to pay or bear, or does not obtain a refund of, through the Contractor's fault, negligence, or failure to follow instructions of the Contracting Officer.

F. No adjustment shall be made in the contract price under this clause unless the amount of the adjustment exceeds $250.

G. The Contractor shall promptly notify the Contracting Officer of all matters relating to any Federal excise tax or duty that reasonably may be expected to result in either an increase or decrease in the contract price and shall take appropriate action as the Contracting Officer directs.

H. The Government shall, without liability, furnish evidence appropriate to establish exemption from any Federal, State, or local tax when the Contractor requests such evidence and a reasonable basis exists to sustain the exemption.

13. Payments – Construction

A. ***Payment of Price.*** Battelle shall pay the Contractor the Contract price as provided in this Contract. Unless otherwise provided in the Contract Schedule, the terms of payment shall be thirty (30) days after receipt of the Contractor's properly submitted invoice.

B. ***Progress Payments***. Battelle shall make progress payments monthly as the work proceeds based on estimates of work accomplished which meets the standards of quality established under the Contract, as approved by Battelle.

1. The Contractor shall furnish a breakdown of the total Contract price showing the amount included therein for each principal category of the work, consistent with the "Schedule of Values", which shall substantiate the payment amount requested in order to provide a basis for determining progress payments, in such detail as requested by Battelle.

2. In the preparation of estimates Battelle may authorize material delivered on the site and preparatory work done to be taken into consideration. Material delivered to the Contractor at locations other than the site will not be approved for progress payments.

3. As part of the request for payment, the Contractor shall submit a report summarizing the month's injuries, illnesses, property damage, fires, "near misses", etc. The summary report should be formatted to include the following items:

   (i) Average number of employees during the month,

   (ii) Total Contractor hours worked on this Contract,

   (iii) Number of sub-tier Contractors,

   (iv) Number of sub-tier Contractor employees by sub-tier Contractor, and

   (v) Total sub-tier Contractor hours (by sub-tier Contractor) worked on this Contract.

4. Submit an electronic invoice in an acceptable format to Battelle at: ap.invoices@pnnl.gov. The electronic invoice shall be integrated with the Contract scheduling requirements and tied to the Contract schedule of values. If electronic transmittal is not possible, submit the invoice and all supporting documentation via mail to:

   Battelle, Pacific Northwest Division
   ATTN: ACCOUNTS PAYABLE
   PO Box 999, MSIN: J1-04
   Richland, WA 99352

C. ***Contractor Certification.*** Along with each request for progress payments, the Contractor shall furnish the following certification, or payment shall not be made:

I hereby certify, to the best of my knowledge and belief, that:

1. The amounts requested are only for performance in accordance with the specifications, terms, and conditions of the Contract;

2. Payments to Subcontractors and suppliers have been made from previous payments received under the Contract, and timely payments will be made from the proceeds of the payment covered by this certification, in accordance with sub-Contract agreements; and

3. This request for progress payments does not include any amounts that the Contractor intends to withhold or retain from a Subcontractor or supplier in accordance with the terms and conditions of the sub-Contract.

D. ***Refund of unearned amounts.*** If the Contractor, after making a certified request for progress payments, discovers that a portion or all of such request constitutes a payment for performance by the Contractor that fails to conform to the specifications, terms, and conditions of this Contract (hereinafter referred to as the "unearned amount"), the Contractor shall:

1. Notify Battelle of such performance deficiency; and

2. Be obligated to pay Battelle an amount (computed by Battelle in the manner provided in 31 U.S.C. 3903 (c) (1)) equal to interest on the unearned amount from the date of receipt of the unearned amount until:

   (i) The date the Contractor notifies Battelle that the performance deficiency has been corrected; or

   (ii) The date the Contractor reduces the amount of any subsequent certified request for progress payments by an amount equal to the unearned amount.

E. ***Retainage.*** In making progress payments, there shall be retained 10 percent of the estimated amount until final completion and acceptance of the Contract work. However, if Battelle finds that satisfactory progress was achieved during any period for which a progress payment is to be made, Battelle may authorize a reduction in retention. When the work is substantially complete, Battelle shall retain from previously withheld funds and future progress payments that amount it considers adequate for protection of Battelle and the Government and shall release to the Contractor all the remaining withheld funds. Also, on completion and acceptance of each separate building, public work, or other division of the Contract, for which the price is stated separately in the Contract, payment shall be made for the completed work without retention of a percentage.

F. ***Title, liability, and reservation of rights.*** All material and work covered by progress payments made shall, at the time of payment, become the sole property of Battelle, but this shall not be construed as:

1. Relieving the Contractor from the sole responsibility for all material and work upon which payments have been made or the restoration of any damaged work; or

2. Waiving the right of Battelle to require the fulfillment of all of the terms of the Contract.

G. ***Reimbursement for bond premiums***. If performance or payment bonds are required under this Contract, Battelle shall pay to the Contractor that portion of the Contract price equal to the total premiums paid by the Contractor to obtain bonds. This payment shall be paid at one time to the Contractor together with the first progress payment otherwise due after the Contractor has:

1. furnished the bonds;

2. furnished evidence of full payment to the surety; and

3. submitted a request for such payment. Payments for bond premiums shall not be made as increments of individual progress payments. The retainage provisions in paragraph (e) of this clause shall not apply to that portion of a progress payment attributable to bond premiums.

H. ***Final payment.*** Upon completion and acceptance of all work, the amount due the Contractor under this Contract shall be paid upon the presentation of a properly executed invoice and after the Contractor shall have furnished Battelle with a release of all claims against Battelle and the Government arising by virtue of this Contract, other than claims in stated amounts that the Contractor has specifically excepted from the operation of the release.

I. ***Limitation because of undefinitized work.*** Notwithstanding any provision of this Contract, progress payments shall not exceed 80 percent on work accomplished on undefinitized Contract actions. A “Contract action” is any action resulting in a Contract, as defined in FAR Subpart 2.1.

14. Suspension of Work (FAR 52.242-14, Apr 1984)

A. The Contracting Officer may order the Contractor, in writing, to suspend, delay, or interrupt all or any part of the work of this contract for the period of time that the Contracting Officer determines appropriate for the convenience of the Government.

B. If the performance of all or any part of the work is, for an unreasonable period of time, suspended, delayed, or interrupted (1) by an act of the Contracting Officer in the administration of this contract, or (2) by the Contracting Officer’s failure to act within the time specified in this contract (or within a reasonable time if not specified), an adjustment shall be made for any increase in the cost of performance of this contract (excluding profit) necessarily caused by the unreasonable suspension, delay, or interruption, and the contract modified in writing accordingly. However, no adjustment shall be made under this clause for any suspension, delay, or interruption to the extent that performance would have been so suspended, delayed, or interrupted by any other cause, including the fault or negligence of the Contractor, or for which an equitable adjustment is provided for or excluded under any other term or condition of this contract.

C. A claim under this clause shall not be allowed—

1. For any costs incurred more than 20 days before the Contractor shall have notified the Contracting Officer in writing of the act or failure to act involved (but this requirement shall not apply as to a claim resulting from a suspension order); and

2. Unless the claim, in an amount stated, is asserted in writing as soon as practicable after the termination of the suspension, delay, or interruption, but not later than the date of final payment under the contract.

15. Stop-Work Order (FAR 52.242-15, Aug 1989)

A. The Contracting Officer may, at any time, by written order to the Contractor, require the Contractor to stop all, or any part, of the work called for by this contract for a period of 90 days after the order is delivered to

the Contractor, and for any further period to which the parties may agree. The order shall be specifically identified as a stop-work order issued under this clause. Upon receipt of the order, the Contractor shall immediately comply with its terms and take all reasonable steps to minimize the incurrence of costs allocable to the work covered by the order during the period of work stoppage. Within a period of 90 days after a stop-work is delivered to the Contractor, or within any extension of that period to which the parties shall have agreed, the Contracting Officer shall either—

1. Cancel the stop-work order; or
2. Terminate the work covered by the order as provided in the Default, or the Termination for Convenience of the Government, clause of this contract.

B. If a stop-work order issued under this clause is canceled or the period of the order or any extension thereof expires, the Contractor shall resume work. The Contracting Officer shall make an equitable adjustment in the delivery schedule or contract price, or both, and the contract shall be modified, in writing, accordingly, if—

1. The stop-work order results in an increase in the time required for, or in the Contractor's cost properly allocable to, the performance of any part of this contract; and
2. The Contractor asserts its right to the adjustment within 30 days after the end of the period of work stoppage; provided that, if the Contracting Officer decides the facts justify the action, the Contracting Officer may receive and act upon the claim submitted at any time before final payment under this contract.

C. If a stop-work order is not canceled and the work covered by the order is terminated for the convenience of the Government, the Contracting Officer shall allow reasonable costs resulting from the stop-work order in arriving at the termination settlement.

D. If a stop-work order is not canceled and the work covered by the order is terminated for default, the Contracting Officer shall allow, by equitable adjustment or otherwise, reasonable costs resulting from the stop-work order.

16. Changes (FAR 52.243-4, June 2007)

A. The Contracting Officer may, at any time, without notice to the sureties, if any, by written order designated or indicated to be a change order, make changes in the work within the general scope of the contract, including changes—

1. In the specifications (including drawings and designs);
2. In the method or manner of performance of the work;
3. In the Government-furnished property or services; or
4. Directing acceleration in the performance of the work.

B. Any other written or oral order (which, as used in this paragraph (b), includes direction, instruction, interpretation, or determination) from the Contracting Officer that causes a change shall be treated as a change order under this clause; Provided, that the Contractor gives the Contracting Officer written notice stating—

1. The date, circumstances, and source of the order; and
2. That the Contractor regards the order as a change order.

C. Except as provided in this clause, no order, statement, or conduct of the Contracting Officer shall be treated as a change under this clause or entitle the Contractor to an equitable adjustment.

D. If any change under this clause causes an increase or decrease in the Contractor's cost of, or the time required for, the performance of any part of the work under this contract, whether or not changed by any such order, the Contracting Officer shall make an equitable adjustment and modify the contract in writing. However, except for an adjustment based on defective specifications, no adjustment for any change under paragraph (b) of this clause shall be made for any costs incurred more than 20 days before the Contractor gives written notice as required. In the case of defective specifications for which the Government is responsible, the equitable adjustment shall include any increased cost reasonably incurred by the Contractor in attempting to comply with the defective specifications.

E. The Contractor must assert its right to an adjustment under this clause within 30 days after (1) receipt of a written change order under paragraph (a) of this clause or (2) the furnishing of a written notice under paragraph (b) of this clause, by submitting to the Contracting Officer a written statement describing the general nature and amount of the proposal, unless this period is extended by the Government. The statement of proposal for adjustment may be included in the notice under paragraph (b) of this clause.

F. No proposal by the Contractor for an equitable adjustment shall be allowed if asserted after final payment under this contract.

17. Pricing of Adjustments - Construction

A. ***General***. When costs are a factor in any determination of a Contract price adjustment pursuant to the "Changes" clause or any other provision of this Contract, such costs shall be in accordance with the Contract cost principles and procedures, in Subpart 31 of the FAR, as supplemented or modified by DEAR Part 931 in effect on the Effective Date of the Contract, except as otherwise provided in this Contract with respect to facilities capital cost of money (CAS 414).

B. ***Requests for Equitable Adjustment***. Contractor shall submit any request for equitable adjustment pursuant the Changes clause within 10 working days after receipt of a notice of a change. The request for equitable adjustment shall include a detailed estimate with supporting calculations and pricing for the change together with any required adjustments in the schedule.

C. ***Net Cost of Change***. For adjustments that either increase or decrease the amount of the Contract Price, the application of markups for overhead and profit shall be on the net change in direct costs for the performance of the changed work.

D. ***Allowable Markups***. Allowable markup percentages on changes will not exceed the following:

1. **Changes < $100,000**. Work performing Contractor's actual overhead rate as established by audit within the last 12 months, not-to-exceed 15 percent on total direct costs, plus a negotiated allowance for profit, not-to-exceed 10 percent;

2. **Changes > $100,000**. Work performing Contractor's actual overhead rate as established by audit within the last 12 months, not-to-exceed 10% on total direct costs, plus a negotiated allowance for profit using the DEAR weighted guideline method, not to exceed 5 percent;

3. **Markups on Lower Tiers**. No more than three mark-ups, one overhead, one profit/fee applied by the Work performing Contractor, and one commission or markup inclusive of overhead and profit by the General Contractor not-to-exceed 10 percent will be allowed regardless of the number of tiers of Subcontractors or the Subcontract instrument (i.e., purchase order, Contract, etc.).

E. ***Premium Adjustments***. Costs of premium adjustments, consequent upon changes ordered, for Payment and Performance Bonds are allowable for the prime Contractor only.

F. ***Consumables***. Consumables shall not be considered on a percentage of cost bases.

G. ***Small Tools***. Consideration for Small tools is allowable at a rate *not to exceed* 3 percent of net labor cost regardless of Contractor assertions of actual cost or independent audit determinations.

H. ***Safety***. Additional costs for safety must be supported as an actual cost necessary for performance of the changed work and will not be allowed as a percentage of net labor costs.

I. ***Equipment***. Rates for rental of Contractor or Subcontractor owned equipment shall be fair and equitable. Actual cost data shall be used when such data can be determined for both ownership and operating costs for each piece of equipment or groups of similar equipment from the Contractor's accounting records. When such costs cannot be so determined, the "Rental Rate Blue Book for Construction Equipment" published by Dataquest, Inc. will be utilized for Contractor equipment in operation or on standby, provided such rental rate is reviewed by Battelle to ensure factors included within the rental rate exclude unallowable or unacceptable costs in accordance with FAR 31.105.

18. Termination for Convenience of the Government (Fixed-Price) (FAR 52.249-2, May 2004)

A. The Government may terminate performance of work under this contract in whole or, from time to time, in part if the Contracting Officer determines that a termination is in the Government's interest. The Contracting Officer shall terminate by delivering to the Contractor a Notice of Termination specifying the extent of termination and the effective date.

B. After receipt of a Notice of Termination, and except as directed by the Contracting Officer, the Contractor shall immediately proceed with the following obligations, regardless of any delay in determining or adjusting any amounts due under this clause:

1. Stop work as specified in the notice.

2. Place no further subcontracts or orders (referred to as subcontracts in this clause) for materials, services, or facilities, except as necessary to complete the continued portion of the contract.

3. Terminate all subcontracts to the extent they relate to the work terminated.

4. Assign to the Government, as directed by the Contracting Officer, all right, title, and interest of the Contractor under the subcontracts terminated, in which case the Government shall have the right to settle or to pay any termination settlement proposal arising out of those terminations.

5. With approval or ratification to the extent required by the Contracting Officer, settle all outstanding liabilities and termination settlement proposals arising from the termination of subcontracts; the approval or ratification will be final for purposes of this clause.

6. As directed by the Contracting Officer, transfer title and deliver to the Government—

   (i) The fabricated or un-fabricated parts, work in process, completed work, supplies, and other material produced or acquired for the work terminated; and

   (ii) The completed or partially completed plans, drawings, information, and other property that, if the contract had been completed, would be required to be furnished to the Government.

7. Complete performance of the work not terminated.

8. Take any action that may be necessary, or that the Contracting Officer may direct, for the protection and preservation of the property related to this contract that is in the possession of the Contractor and in which the Government has or may acquire an interest.

9. Use its best efforts to sell, as directed or authorized by the Contracting Officer, any property of the types referred to in paragraph (b)(6) of this clause; provided, however, that the Contractor (i) is not required to extend credit to any purchaser and (ii) may acquire the property under the conditions prescribed by, and at prices approved by, the Contracting Officer. The proceeds of any transfer or disposition will be applied to reduce any payments to be made by the Government under this contract, credited to the price or cost of the work, or paid in any other manner directed by the Contracting Officer.

C. The Contractor shall submit complete termination inventory schedules no later than 120 days from the effective date of termination, unless extended in

writing by the Contracting Officer upon written request of the Contractor within this 120-day period.

D. After expiration of the plant clearance period as defined in Subpart 49.001 of the Federal Acquisition Regulation, the Contractor may submit to the Contracting Officer a list, certified as to quantity and quality, of termination inventory not previously disposed of, excluding items authorized for disposition by the Contracting Officer. The Contractor may request the Government to remove those items or enter into an agreement for their storage. Within 15 days, the Government will accept title to those items and remove them or enter into a storage agreement. The Contracting Officer may verify the list upon removal of the items, or if stored, within 45 days from submission of the list, and shall correct the list, as necessary, before final settlement.

E. After termination, the Contractor shall submit a final termination settlement proposal to the Contracting Officer in the form and with the certification prescribed by the Contracting Officer. The Contractor shall submit the proposal promptly, but no later than 1 year from the effective date of termination, unless extended in writing by the Contracting Officer upon written request of the Contractor within this 1-year period. However, if the Contracting Officer determines that the facts justify it, a termination settlement proposal may be received and acted on after 1 year or any extension. If the Contractor fails to submit the proposal within the time allowed, the Contracting Officer may determine, on the basis of information available, the amount, if any, due the Contractor because of the termination and shall pay the amount determined.

F. Subject to paragraph (e) of this clause, the Contractor and the Contracting Officer may agree upon the whole or any part of the amount to be paid or remaining to be paid because of the termination. The amount may include a reasonable allowance for profit on work done. However, the agreed amount, whether under this paragraph (f) or paragraph (g) of this clause, exclusive of costs shown in paragraph (g)(3) of this clause, may not exceed the total contract price as reduced by (1) the amount of payments previously made and (2) the contract price of work not terminated. The contract shall be modified, and the Contractor paid the agreed amount. Paragraph (g) of this clause shall not limit, restrict, or affect the amount that may be agreed upon to be paid under this paragraph.

G. If the Contractor and Contracting Officer fail to agree on the whole amount to be paid the Contractor because of the termination of work, the Contracting Officer shall pay the Contractor the amounts determined as follows, but without duplication of any amounts agreed upon under paragraph (f) of this clause:

1. For contract work performed before the effective date of termination, the total (without duplication of any items) of—

   (i) The cost of this work;

   (ii) The cost of settling and paying termination settlement proposals under terminated subcontracts that are properly chargeable to the terminated portion of the contract if not included in subdivision (g)(1)(i) of this clause; and

   (iii) A sum, as profit on subdivision (g)(1)(i) of this clause, determined by the Contracting Officer under 49.202 of the Federal Acquisition Regulation, in effect on the date of this contract, to be fair and reasonable; however, if it appears that the Contractor would have sustained a loss on the entire contract had it been completed, the Contracting Officer shall allow no profit under this subdivision (g)(1)(iii) and shall reduce the settlement to reflect the indicated rate of loss.

2. The reasonable costs of settlement of the work terminated, including—

   (i) Accounting, legal, clerical, and other expenses reasonably necessary for the preparation of termination settlement proposals and supporting data;

   (ii) The termination and settlement of subcontracts (excluding the amounts of such settlements); and

   (iii) Storage, transportation, and other costs incurred, reasonably necessary for the preservation, protection, or disposition of the termination inventory.

H. Except for normal spoilage, and except to the extent that the Government expressly assumed the risk of loss, the Contracting Officer shall exclude from the amounts payable to the Contractor under paragraph (g) of this clause, the fair value, as determined by the Contracting Officer, of property that is destroyed, lost, stolen, or damaged so as to become undeliverable to the Government or to a buyer.

I. The cost principles and procedures of Part 31 of the Federal Acquisition Regulation, in effect on the date of this contract, shall govern all costs claimed, agreed to, or determined under this clause.

J. The Contractor shall have the right of appeal, under the Disputes clause, from any determination made by the Contracting Officer under paragraph (e), (g), or (l) of this clause, except that if the Contractor failed to submit the termination settlement proposal or request for equitable adjustment within the time provided in paragraph (e) or (l), respectively, and failed to request a time extension, there is no right of appeal.

K. In arriving at the amount due the Contractor under this clause, there shall be deducted—

1. All un-liquidated advance or other payments to the Contractor under the terminated portion of this contract;

2. Any claim which the Government has against the Contractor under this contract; and

3. The agreed price for, or the proceeds of sale of, materials, supplies, or other things acquired by the Contractor or sold under the provisions of this clause and not recovered by or credited to the Government.

L. If the termination is partial, the Contractor may file a proposal with the Contracting Officer for an equitable adjustment of the price(s) of the continued portion of

the contract. The Contracting Officer shall make any equitable adjustment agreed upon. Any proposal by the Contractor for an equitable adjustment under this clause shall be requested within 90 days from the effective date of termination unless extended in writing by the Contracting Officer.

M. (1) The Government may, under the terms and conditions it prescribes, make partial payments and payments against costs incurred by the Contractor for the terminated portion of the contract, if the Contracting Officer believes the total of these payments will not exceed the amount to which the Contractor will be entitled.

(2) If the total payments exceed the amount finally determined to be due, the Contractor shall repay the excess to the Government upon demand, together with interest computed at the rate established by the Secretary of the Treasury under 50 U.S.C. App. 1215(b)(2). Interest shall be computed for the period from the date the excess payment is received by the Contractor to the date the excess is repaid. Interest shall not be charged on any excess payment due to a reduction in the Contractor's termination settlement proposal because of retention or other disposition of termination inventory until 10 days after the date of the retention or disposition, or a later date determined by the Contracting Officer because of the circumstances.

N. Unless otherwise provided in this contract or by statute, the Contractor shall maintain all records and documents relating to the terminated portion of this contract for 3 years after final settlement. This includes all books and other evidence bearing on the Contractor's costs and expenses under this contract. The Contractor shall make these records and documents available to the Government, at the Contractor's office, at all reasonable times, without any direct charge. If approved by the Contracting Officer, photographs, microphotographs, or other authentic reproductions may be maintained instead of original records and documents.

19. Default (Fixed-Price Construction) (FAR 52.249-10, Apr 1984)

A. If the Contractor refuses or fails to prosecute the work or any separable part, with the diligence that will insure its completion within the time specified in this contract including any extension, or fails to complete the work within this time, the Government may, by written notice to the Contractor, terminate the right to proceed with the work (or the separable part of the work) that has been delayed. In this event, the Government may take over the work and complete it by contract or otherwise, and may take possession of and use any materials, appliances, and plant on the work site necessary for completing the work. The Contractor and its sureties shall be liable for any damage to the Government resulting from the Contractor's refusal or failure to complete the work within the specified time, whether or not the Contractor's right to proceed with the work is terminated. This liability includes any increased costs incurred by the Government in completing the work.

B. The Contractor's right to proceed shall not be terminated nor the Contractor charged with damages under this clause, if—

1. The delay in completing the work arises from unforeseeable causes beyond the control and without the fault or negligence of the Contractor. Examples of such causes include—

(i) Acts of God or of the public enemy,

(ii) Acts of the Government in either its sovereign or contractual capacity,

(iii) Acts of another Contractor in the performance of a contract with the Government,

(iv) Fires,

(v) Floods,

(vi) Epidemics,

(vii) Quarantine restrictions,

(viii) Strikes,

(ix) Freight embargoes,

(x) Unusually severe weather, or

(xi) Delays of subcontractors or suppliers at any tier arising from unforeseeable causes beyond the control and without the fault or negligence of both the Contractor and the subcontractors or suppliers; and

2. The Contractor, within 10 days from the beginning of any delay (unless extended by the Contracting Officer), notifies the Contracting Officer in writing of the causes of delay. The Contracting Officer shall ascertain the facts and the extent of delay. If, in the judgment of the Contracting Officer, the findings of fact warrant such action, the time for completing the work shall be extended. The findings of the Contracting Officer shall be final and conclusive on the parties, but subject to appeal under the Disputes clause.

C. If, after termination of the Contractor's right to proceed, it is determined that the Contractor was not in default, or that the delay was excusable, the rights and obligations of the parties will be the same as if the termination had been issued for the convenience of the Government.

D. The rights and remedies of the Government in this clause are in addition to any other rights and remedies provided by law or under this contract.

20. Failure to Perform - Construction

A. Subject to the Excusable Delays clause, if the Contractor fails to perform this Contract under its terms, Battelle shall give the Contractor written notice stating the failure. Thereafter, regardless of any other provision of this Contract, the Contractor shall not be entitled to an equitable adjustment under either this Contract or any related Contract, to the extent the equitable adjustment arises from the Contractor's failure to perform or from any reasonable remedial action taken by Battelle based upon the failure.

B. The failure of Battelle to insist, in one or more instances, upon the performance of any term of this Contract is not a waiver of Battelle's right to future performance of such term, and the Contractor's obligation for future performance of such term shall continue in effect.

C. The rights and remedies of Battelle in this clause are in addition to any other rights and remedies provided by law or under this Contract.

21. Excusable Delays (FAR 52.249-14, Apr 1984)

A. Except for defaults of subcontractors at any tier, the Contractor shall not be in default because of any failure to perform this contract under its terms if the failure arises from causes beyond the control and without the fault or negligence of the Contractor. Examples of these causes are (1) acts of God or of the public enemy, (2) acts of the Government in either its sovereign or contractual capacity, (3) fires, (4) floods, (5) epidemics, (6) quarantine restrictions, (7) strikes, (8) freight embargoes, and (9) unusually severe weather. In each instance, the failure to perform must be beyond the control and without the fault or negligence of the Contractor. "Default" includes failure to make progress in the work so as to endanger performance.

B. If the failure to perform is caused by the failure of a subcontractor at any tier to perform or make progress, and if the cause of the failure was beyond the control of both the Contractor and subcontractor, and without the fault or negligence of either, the Contractor shall not be deemed to be in default, unless—

1. The subcontracted supplies or services were obtainable from other sources;

2. The Contracting Officer ordered the Contractor in writing to purchase these supplies or services from the other source; and

3. The Contractor failed to comply reasonably with this order.

C. Upon request of the Contractor, the Contracting Officer shall ascertain the facts and extent of the failure. If the Contracting Officer determines that any failure to perform results from one or more of the causes above, the completion time shall be revised, subject to the rights of the Government under the termination clause of this contract.

22. Disputes (FAR 52.233-1, May 2014)

A. This contract is subject to the Contract Disputes Act of 1978, as amended (41 U.S.C. 601-613).

B. Except as provided in the Act, all disputes arising under or relating to this contract shall be resolved under this clause.

C. "Claim," as used in this clause, means a written demand or written assertion by one of the contracting parties seeking, as a matter of right, the payment of money in a sum certain, the adjustment or interpretation of contract terms, or other relief arising under or relating to this contract. However, a written demand or written assertion by the Contractor seeking the payment of money exceeding $100,000 is not a claim under the Act until certified. A voucher, invoice, or other routine request for payment that is not in dispute when submitted is not a claim under the Act. The submission may be converted to a claim under the Act, by complying with the submission and certification requirements of this clause, if it is disputed either as to liability or amount or is not acted upon in a reasonable time.

D. (1) A claim by the Contractor shall be made in writing and, unless otherwise stated in this contract, submitted within 6 years after accrual of the claim to the Contracting Officer for a written decision. A claim by the Government against the Contractor shall be subject to a written decision by the Contracting Officer.

(2)(i) The Contractor shall provide the certification specified in paragraph (d)(2)(iii) of this clause when submitting any claim exceeding $100,000.

(ii) The certification requirement does not apply to issues in controversy that have not been submitted as all or part of a claim.

(iii) The certification shall state as follows: "I certify that the claim is made in good faith; that the supporting data are accurate and complete to the best of my knowledge and belief; that the amount requested accurately reflects the contract adjustment for which the Contractor believes the Government is liable; and that I am duly authorized to certify the claim on behalf of the Contractor."

(3) The certification may be executed by any person duly authorized to bind the Contractor with respect to the claim.

E. For Contractor claims of $100,000 or less, the Contracting Officer must, if requested in writing by the Contractor, render a decision within 60 days of the request. For Contractor-certified claims over $100,000, the Contracting Officer must, within 60 days, decide the claim or notify the Contractor of the date by which the decision will be made.

F. The Contracting Officer's decision shall be final unless the Contractor appeals or files a suit as provided in the Act.

G. If the claim by the Contractor is submitted to the Contracting Officer or a claim by the Government is presented to the Contractor, the parties, by mutual consent, may agree to use alternative dispute resolution (ADR). If the Contractor refuses an offer for ADR, the Contractor shall inform the Contracting Officer, in writing, of the Contractor's specific reasons for rejecting the offer.

H. The Government shall pay interest on the amount found due and unpaid from (1) the date that the Contracting Officer receives the claim (certified, if required); or (2) the date that payment otherwise would be due, if that date is later, until the date of payment. With regard to claims having defective certifications, as defined in FAR 33.201, interest shall be paid from the date that the Contracting Officer initially receives the claim. Simple interest on claims shall be paid at the rate, fixed by the Secretary of the Treasury as provided in the Act, which is applicable to the period during which the Contracting Officer receives the claim and then at the rate applicable for each 6-month period as fixed by the Treasury Secretary during the pendency of the claim.

I. The Contractor shall proceed diligently with performance of this contract, pending final resolution of any request for relief, claim, appeal, or action arising under the contract, and comply with any decision of the Contracting Officer.

23. Indemnity (cl. 351C – Aug 2009)

Contractor shall indemnify and save harmless Battelle from and against any and all liabilities and losses for injury (including death) to persons (including but not limited to Contractor's employees) or damage to property to the extent caused by a negligent act or omission or willful misconduct of the Contractor, its agents, or employees that occur during the performance of this contract, including any and all expense, legal or otherwise, incurred in the investigation or defense of any claim.

This indemnification shall not include such injuries to any person or persons or damage to or destruction of any property to the extent caused by the negligence or omission of Battelle or its employees.

In no event shall either Contractor or Battelle be liable for any special, incidental, or consequential damages of any type or nature.

24. Public Release of Information

Information, data, photographs, sketches, and advertising relating to the work under this contract, which Contractor desires to release or publish, shall be submitted to Battelle for approval 60 days prior to the desired release date. As part of the approval request, Contractor shall identify the specific media to be used as well as other pertinent details of the proposed release. All releases, regardless of tier or supplier, must have Battelle's prior approval. Contractor shall include all provisions of this clause, including this sentence, in all lower-tier subcontracts under this contract.

25. Prohibition on Participation in Foreign Government-Sponsored Talent Recruitment Programs of a Foreign Country of Risk (cl.312 – December 2020)

Applies to research & development (R&D) or demonstration contracts, at any tier, performed on or at a DOE/NNSA site/facility, including DOE/NNSA/Battelle leased space.

A. Contractor Personnel participation in any Foreign Government-Sponsored Talent Recruitment Program of a Foreign Country of Risk is prohibited. Contractor shall utilize due diligence to ensure that Contractor Personnel performing work within the scope of this contract, working at any level, are not participants in a Foreign Government-Sponsored Talent Recruitment Program of a Foreign Country of Risk.

B. Contractor shall immediately notify the Battelle Contracts Representative if the Contractor has reason to believe that any Contractor Personnel are participants in a Foreign Government-Sponsored Talent Recruitment Program of a Foreign Country of Risk, and shall provide the following information:

   1. Country;
   2. Description of the activity/Foreign Government-Sponsored Talent Recruitment Program;
   3. Funding or other value received or expected;
   4. Duration;
   5. Technical area;
   6. Contractor action;
   7. Status or disposition; and
   8. Any other information requested by Battelle or the U.S. Government.

   Battelle is required to share this information with the U.S. Government, and the reported activity is subject to a final determination by the U.S. Government.

C. Contractor shall take appropriate action to ensure that Contractor Personnel currently participating in a disclosed or otherwise identified Foreign Government-Sponsored Talent Recruitment Program of a Foreign Country of Risk either stop performing work within the scope of the contract or stop participation in such activity within a reasonable period of time, not to exceed 30 days.

D. Failure by the Contractor to reasonably ensure compliance with this contract clause, may result in Battelle exercising contractual remedies in accordance with federal regulations and the terms of the contract, up to and including termination of this contract.

E. Contractor is responsible for flowing down the requirements of this clause to R&D or demonstration subcontracts at any tier to the extent necessary to ensure Contractor's compliance with the requirements, where the lower tier subcontractor's work under this contract is performed on or at a DOE/NNSA site/facility, including DOE/NNSA/Battelle leased space.

F. Battelle reserves the right to direct Contractor to remove any Contractor Personnel participating in a Foreign Government-Sponsored Talent Recruitment Program of a Foreign Country of Risk from performing any work under this contract on or at any facility of the Pacific Northwest National Laboratory (PNNL) or from any other DOE/NNSA site/facility (including DOE/NNSA/Battelle leased facilities). To the extent Battelle requires the Contractor Personnel participating in the Foreign Government-Sponsored Talent Recruitment Program of a Foreign Country of Risk to be removed from performing any further work under this contract, Contractor shall do so unless the Contractor Personnel agrees to discontinue participation in the Foreign Government-Sponsored Talent Recruitment Program of a Foreign Country of Risk. Contractor is not entitled to any claim for equitable adjustment against Battelle as a result of direction provided under this subparagraph.

G. The following definitions shall apply:

   1. "Contractor Personnel" for purposes of this clause mean:

      i. Any Contractor employee; and

      ii. Subcontractor employee, joint appointee from another institution, and any other individual performing R&D work, whether compensated or uncompensated, within the scope of this contract either on-site at the DOE/NNSA site/facility or in DOE/NNSA/contractor leased space.

   2. "Foreign Country of Risk" refers to any foreign country determined to be of risk, following consideration of, but not limited to, the Office of the Director of National Intelligence World Wide Threat Assessment and The National Counterintelligence Strategy of the United States of America, by the Under Secretary for Science in consultation with the Under

Secretary of Energy; the Under Secretary for Nuclear Security; and the Office of Intelligence and Counterintelligence.

3. "Foreign Government-Sponsored Talent Recruitment Program" refers to an effort directly or indirectly organized, managed, or funded by a foreign government to recruit science and technology professionals or students (regardless of citizenship or national origin, and whether having a full-time or part-time position). The term is more fully defined in DOE O 486.1A, Attachment 2, which is hereby incorporated by reference.

26. Unclassified Foreign Visits and Assignments (cl. 3114 –October 2020)

This clause applies when foreign nationals will have access to DOE owned or leased sites, information, technologies, or equipment under this contract.

All foreign national contractor personnel must be approved in writing by Battelle before being granted access to any PNNL or DOE facilities, systems, technologies or information under this contract. Contractor shall provide the following information as applicable by individual:
A. Non-U.S. Citizen Pre-Visit Form
B. Passport and visa documents (non-immigration documentation) or immigrant document (lawful permanent resident card)

Contractor shall provide a point-of-contact, through which, such information shall be provided.

27. Rights to Proposal Data

Except for the technical data contained on those pages of Contractor's proposal, which are specifically identified in this contract with specific reference to this clause and asserted by Contractor as being proprietary data, it is agreed that, as a condition of the award of this contract and notwithstanding the provisions of any notice

28. Bankruptcy (cl. 318 - Nov 2008)

If the Contractor enters into any proceeding related to bankruptcy, it shall give written notice to the Battelle Contracts Representative via certified mail within five days of initiation of the proceeding. The notification shall include the date on which the proceeding was filed, the identity and location of the court, and a listing of the Battelle purchase orders, contracts, or agreements affected.

29. Laws, Regulations, DOE Directives, and Indemnification (cl. ci-3121 – Mar 2014)

Contractor shall comply with all applicable federal, state, and local laws and ordinances and all pertinent orders, DOE directives, rules, and regulations (including DOE regulations) and such compliance shall be a material requirement of this Contract. Contractor shall, without additional cost to Battelle, be responsible for obtaining any necessary licenses and permits.

To the extent authorized by law, Contractor shall indemnify and hold harmless the Government, Battelle, and each of their respective officers, directors, employees, agents, and successors in interest from and against all liability, claims, suits, damages, losses, costs, fines, civil penalties, remediation, or corrective actions, and any associated expense (including, without limitation, costs of: (i) defense; (ii) settlement; (iii) reasonable attorney's fees; and (iv) costs incurred in enforcing this indemnification) arising out of Contractor's non-compliance with any such laws and regulations.

Regardless of the performer of the work, the Contractor is responsible for compliance with the requirements of this clause. The Contractor is responsible for flowing down the requirements of this clause to subcontracts at any tier to the extent necessary to ensure the contractor's compliance with the requirements.

MATERIAL REQUIREMENTS AND QUANTITIES

30. Material Requirements (FAR 52.211-5, Aug 2000)

A. *Definitions*.

As used in this clause—

"New" means composed of previously unused components, whether manufactured from virgin material, recovered material in the form of raw material, or materials and by-products generated from, and reused within, an original manufacturing process; *provided* that the supplies meet contract requirements, including but not limited to, performance, reliability, and life expectancy.

"Reconditioned" means restored to the original normal operating condition by readjustments and material replacement.

"Recovered material" means waste materials and by-products recovered or diverted from solid waste, but the term does not include those materials and by-products generated from, and commonly reused within, an original manufacturing process.

"Remanufactured" means factory rebuilt to original specifications.

"Virgin material" means—

1. Previously unused raw material, including previously unused copper, aluminum, lead, zinc, iron, other metal or metal ore; or
2. Any undeveloped resource that is, or with new technology will become, a source of raw materials.

B. Unless this contract otherwise requires virgin material or supplies composed of or manufactured from virgin material, the Contractor shall provide supplies that are new, reconditioned, or remanufactured, as defined in this clause.

C. A proposal to provide unused former Government surplus property shall include a complete description of the material, the quantity, the name of the Government agency from which acquired, and the date of acquisition.

D. A proposal to provide used, reconditioned, or remanufactured supplies shall include a detailed description of such supplies and shall be submitted to the Contracting Officer for approval.

E. Used, reconditioned, or remanufactured supplies, or unused former Government surplus property, may be used in contract performance if the Contractor has proposed the use of such supplies, and the Contracting Officer has authorized their use.

31. Brand Name or Equal (FAR 52.211-6, Aug 1999)

A. If an item in this solicitation is identified as "brand name or equal," the purchase description reflects the characteristics and level of quality that will satisfy the Government's needs. The salient physical, functional, or performance characteristics that "equal" products must meet are specified in the solicitation.

B. To be considered for award, offers of "equal" products, including "equal" products of the brand name manufacturer, must—

1. Meet the salient physical, functional, or performance characteristic specified in this solicitation;

2. Clearly identify the item by—

(i) Brand name, if any; and

(ii) Make or model number;

3. Include descriptive literature such as illustrations, drawings, or a clear reference to previously furnished descriptive data or information available to the Contracting Officer; and

4. Clearly describe any modifications the offeror plans to make in a product to make it conform to the solicitation requirements. Mark any descriptive material to clearly show the modifications.

C. The Contracting Officer will evaluate "equal" products on the basis of information furnished by the offeror or identified in the offer and reasonably available to the Contracting Officer. The Contracting Officer is not responsible for locating or obtaining any information not identified in the offer.

D. Unless the offeror clearly indicates in its offer that the product being offered is an "equal" product, the offeror shall provide the brand name product referenced in the solicitation.

32. Variation in Estimated Quantity (FAR 52.211-18, Apr 1984)

If the quantity of a unit-priced item in this contract is an estimated quantity and the actual quantity of the unit-priced item varies more than 15 percent above or below the estimated quantity, an equitable adjustment in the contract price shall be made upon demand of either party. The equitable adjustment shall be based upon any increase or decrease in costs due solely to the variation above 115 percent or below 85 percent of the estimated quantity. If the quantity variation is such as to cause an increase in the time necessary for completion, the Contractor may request, in writing, an extension of time, to be received by the Contracting Officer within 10 days from the beginning of the delay, or within such further period as may be granted by the Contracting Officer before the date of final settlement of the contract. Upon the receipt of a written request for an extension, the Contracting Officer shall ascertain the facts and make an adjustment for extending the completion date as, in the judgment of the Contracting Officer, is justified.

ENVIRONMENTAL SAFETY AND HEALTH

33. Environment, Safety, and Health Requirements - Offsite (cl. 3113e – May 2012)

A. In performing work under this contract at its own facilities or any other location that is not a DOE-owned or leased facility, the Contractor shall comply with all applicable federal, state, and local environment, safety, and health laws and regulations. The Contractor shall also perform work safely, in a manner that ensures adequate protection for employees, the public, and the environment, and shall be accountable for the safe performance of work. The Contractor shall exercise a degree of care commensurate with the work and the associated hazards. The Contractor shall ensure that management of environment, safety, and health functions and activities becomes an integral but visible part of the Contractor's work planning and execution processes.

B. The Contractor is responsible for its subcontractors' compliance with the environment, safety, and health requirements of this contract.

34. Environment, Safety, and Health Requirements (10 CFR 851)

Contractor shall refer to the Contract Schedule for any other Environment, Safety, and Health requirements pertaining to 10 CFR 851, and shall comply with such requirements, when performing any work under this contract on property or facilities owned or controlled by Battelle that are identified as PNNL Work Sites or on property or facilities owned or controlled by the United States Department of Energy (DOE), other than PNNL.

35. Notifications and Investigations

A. ***Emergency Notifications***

1. For onsite emergencies (police, fire, rescue, hazmat) call 509-375-2400.

2. For offsite emergencies (police, fire, rescue, hazmat) call 911.

B. ***Event Notification***

The Contractor shall notify the Battelle Construction Manager or Battelle Contracts Representative immediately of any OSHA-recordable injuries/illnesses, any "off-normal occurrences," or Government property damaged that the Contractor determines to have occurred in the course of operations onsite and shall furnish such further information as the Battelle Construction Manager or Battelle Contracts Representative may require. An "off-normal occurrence" is any unplanned or unexpected event, or the discovery of a deficiency in a procedure, plan, or system that has real or potentially undesirable consequences to personnel, equipment, facilities, the environment, and/or programs.

C. ***Accident Investigation***

1. The Contractor shall cooperate in the conduct of accident investigations which result in recordable injury/illness, property damage, fire, radiation event, and fatality.

2. When a Contractor employee is involved in a serious event or accident, the Contractor shall implement the following actions:

A. Secure the event scene from disturbance and unauthorized entry pending arrival of Battelle Representatives.

B. Keep equipment or articles involved in the event from being operated, moved, or

otherwise altered or repaired.

36. Solid Waste Management

A. Solid Waste Management. The Contractor is responsible to manage solid waste in accordance with all applicable Federal, State and local laws. The Contractor shall follow Battelle's Standards Based Management System requirements for accumulation, interim storage and final disposal of the following types of solid waste:

1. Hazardous waste including soil or debris contaminated with hazardous waste.
2. Radioactive contaminated waste, materials and equipment.
3. Materials containing asbestos.
4. Materials containing polychlorinated biphenyls (PCBs).
5. Unused residual construction materials, not the property of Battelle, may be retained by the Contractor for future use or disposal by the Contractor. Such materials must otherwise be managed in accordance with Battelle's SBMS requirements while on Battelle managed property.

B. Environmental Permits / Notifications. The Contractor shall coordinate the preparation of environmental permit applications / notifications with Battelle's ES&H Organization for the purpose of integrating new and existing environmental approvals. The Contractor shall Notify Battelle, prior to commencing construction, in the following circumstances:

1. Clean Air Act Permits.
   (i). Notice of Intent to Remove Asbestos. The Contractor shall contact Battelle before proceeding with work that could disturb asbestos and materials containing asbestos. A representative from Battelle's ES&H organization will assist the Contractor in preparing the Notice of Intent to remove asbestos for submittal to the appropriate regulatory agency.
   (ii). Construction / Demolition activities which could disturb / disperse radioactive contamination (e.g. excavation of contaminated soils or demolition of contaminated structures)
2. Clean Water Act Permits. The Contractor shall notify Battelle prior to commencing construction activities which may require clean water act permits including but not limited to:
   (i). Disturbing greater than one acre of land
   (ii). Construction of ground water wells
   (iii). Discharge of liquid effluent (to ground; or existing sewer systems)
   (iv). Installation of temporary or permanent septic systems
   (v). Placement or installation of above-ground tanks for fuel storage
3. Underground Storage Tanks. The Contractor shall notify Battelle prior to commencing construction activities to install or remove any underground storage tank.

C. Spills and Releases. The Contractor shall manage hazardous substances (as defined by State of Washington regulations, including petroleum) in accordance with regulatory requirements and in a manner that prevents accidental spillage or release to the environment. In the event of a spill or release, the Contractor shall immediately:

1. Notify the Battelle Construction Manager of the spill; and
2. Respond to, control, and remediate any spill or release of hazardous substances or hazardous waste, managing spill residues in accordance with applicable Federal, DOE, State and Local regulations and requirements.

37. Maintenance, Service, Repair or Disposal of Refrigeration Equipment and Air Conditioners (FAR 52.223-12, June 2016)

A. *Definitions*. As used in this clause—

"Recycling" means the series of activities, including collection, separation, and processing, by which products or other materials are recovered from the solid waste stream for use in the form of raw materials in the manufacture of products other than fuel for producing heat or power by combustion.

"Waste prevention" means any change in the design, manufacturing, purchase, or use of materials or products (including packaging) to reduce their amount or toxicity before they are discarded. Waste prevention also refers to the reuse of products or materials.

"Waste reduction" means preventing or decreasing the amount of waste being generated through waste prevention, recycling, or purchasing recycled and environmentally preferable products.

B. Consistent with the requirements of section 3(e) of Executive Order 13423, the Contractor shall establish a program to promote cost-effective waste reduction in all operations and facilities covered by this contract. The Contractor's programs shall comply with applicable Federal, State, and local requirements, specifically including Section 6002 of the Resource Conservation and Recovery Act (42 U.S.C. 6962, *et seq*.) and implementing regulations (40 CFR Part 247).

38. Accident Prevention (FAR 52.236-13 Nov 1991)

A. The Contractor shall provide and maintain work environments and procedures which will—

1. Safeguard the public and Government personnel, property, materials, supplies, and equipment exposed to Contractor operations and activities;
2. Avoid interruptions of Government operations and delays in project completion dates; and
3. Control costs in the performance of this contract.

B. For these purposes on contracts for construction or dismantling, demolition, or removal of improvements, the Contractor shall—

1. Provide appropriate safety barricades, signs, and

signal lights;

2. Comply with the standards issued by the Secretary of Labor at 29 CFR Part 1926 and 29 CFR Part 1910; and

3. Ensure that any additional measures the Contracting Officer determines to be reasonably necessary for the purposes are taken.

C. If this contract is for construction or dismantling, demolition or removal of improvements with any Department of Defense agency or component, the Contractor shall comply with all pertinent provisions of the latest version of U.S. Army Corps of Engineers Safety and Health Requirements Manual, EM 385-1-1, in effect on the date of the solicitation.

D. Whenever the Contracting Officer becomes aware of any noncompliance with these requirements or any condition which poses a serious or imminent danger to the health or safety of the public or Government personnel, the Contracting Officer shall notify the Contractor orally, with written confirmation, and request immediate initiation of corrective action. This notice, when delivered to the Contractor or the Contractor's representative at the work site, shall be deemed sufficient notice of the noncompliance and that corrective action is required. After receiving the notice, the Contractor shall immediately take corrective action. If the Contractor fails or refuses to promptly take corrective action, the Contracting Officer may issue an order stopping all or part of the work until satisfactory corrective action has been taken. The Contractor shall not be entitled to any equitable adjustment of the contract price or extension of the performance schedule on any stop work order issued under this clause.

E. The Contractor shall insert this clause, including this paragraph (e), with appropriate changes in the designation of the parties, in subcontracts.

39. Sustainable Acquisition Requirements (cl. 381 – Oct 2015)

Battelle is committed to managing its operations in a sustainable manner which promotes the natural environment and protects the health and well-being of its employees and contractor service providers. In the performance of work under this contract, the Contractor shall provide products that comply with Federal law as follows (regardless of any notations on the respective websites):

Recycled Content as designated by the Environmental Protection Agency (EPA) - http://www.epa.gov/epawaste/conserve/tools/cpg/products/index.htm

Biobased Products as designated by the United States Department of Agriculture (USDA) - http://www.biopreferred.gov/BioPreferred/faces/pages/ProductCategories.xhtml

Energy-Efficient Products such as Energy Star certified and FEMP-designated products - http://www.energystar.gov/index.cfm?c=product_specs.pt_product_specs and http://www1.eere.energy.gov/femp/technologies/eep_purchasingspecs.html

Water-Efficient Products as designated by the EPA for their WaterSense® label program - http://www.epa.gov/watersense/products/index.html

Environmentally preferable and energy efficient electronics, including desktop computers, laptops and monitors, as specified at the Green Electronics Council's Electronic Products Environmental Assessment Tool (EPEAT) registry- http://ww2.epeat.net/searchoptions.aspx)

Non-Ozone Depleting Alternative Products as designated by the EPA - http://www.epa.gov/ozone/snap/index.html

Low-Emitting Volatile Organic Compounds (VOC) Materials as designated by the Federal Leadership in High Performance and Sustainable Buildings Guiding Principles (including adhesives, sealants, paints, carpet systems, and furnishings) for building modifications, maintenance, and cleaning - http://www.epa.gov/greeningepa/projects/requirements.htm

QUALITY ASSURANCE

40. Quality Assurance

The Contractor shall assure that all work (e.g., submittals, products, manufacture, fabrication, installation of products and components, workmanship, inspection, and testing) performed by it or its Subcontractors and suppliers is in compliance with all contract documents (i.e., technical specifications, drawings, and Division 1). Work may include products and services (e.g., welding, nondestructive examination, soldering workmanship, manufacturer of radiation calibration standards, and equipment) that necessitate additional or special Quality Assurance / Quality Control, requirements, including the need for a documented Quality Assurance program. When such requirements are applicable to the Contractor's work, they will be identified specifically in the contract documents. The Contractor shall require, in writing, Subcontractors of all tiers to comply with all applicable contractual requirements.

41. Suspect/Counterfeit Items

A. Battelle's Suspect / Counterfeit Items (S/CI) program responds to the S/CI requirements in the following documents:

1. DOE Order 414.1C, —Quality Assurance Attachment 3, addresses the requirement for the S/CI prevention process and the control of S/CIs;

2. DOE G 414.1-3, —Suspect/Counterfeit Items Guide for Use with 10 CFR 830, Subpart A, Energy/Nuclear Safety Management/Quality Assurance Requirements and DOE O 414.1B, Quality Assurance;

3. DOE Order 231.1A Change 1, —Environment, Safety, and Health Reporting, and DOE Order 221.1, —Reporting Fraud, Waste, and Abuse to the Office of Inspector General addresses reporting requirements for discovery of S/CIs.

B. S/CIs may pose immediate and potential threats to the safety of Battelle, DOE and contractor workers, the public, and the environment. Failure of a safety or mission critical system due to an S/CI could also have security implications at DOE facilities. The most common S/CIs found at Battelle and DOE facilities have been threaded fasteners fraudulently marked as high-strength bolts, and refurbished electrical circuit

breakers sold and distributed under false certifications. Falsified documentation has also misled purchasers into accepting S/CIs that do not conform to specified requirements. Forms of misrepresentation include the following:

1. Falsified product sources (counterfeits);
2. Falsified or modified quality records;
3. False marking as to class, type, or grade;
4. Mixing of unmarked with marked materials;
5. False labeling as to qualification or acceptance by testing/certifying organizations; and
6. Used products misrepresented as new products.

C. S/CI Awareness Training Manual developed by DOE-Office of Corporate Safety Analysis (HS-30) that can help to identify and disposition S/CI's discovered at Battelle and DOE facilities can be accessed at the following linkhttp://energy.gov/sites/prod/files/2014/06/f16/SCI_Training_Manual.pdf.

D. The Contractor shall assure that all products delivered on this contract do not contain S/CI parts. If S/CI parts are discovered, notify Battelle for further direction. All discrepant part(s)/product(s) will be replaced at the Contractor's expense.

42. Contractor Inspection Requirements (FAR 52.246-1, Apr 1984)

The Contractor is responsible for performing or having performed all inspections and tests necessary to substantiate that the supplies or services furnished under this contract conform to contract requirements, including any applicable technical requirements for specified manufacturers' parts. This clause takes precedence over any Government inspection and testing required in the contract's specifications, except for specialized inspections or tests specified to be performed solely by the Government.

43. Inspection of Construction (FAR 52.246-12, Aug 1996)

A. *Definition.* "Work" includes, but is not limited to, materials, workmanship, and manufacture and fabrication of components.

B. The Contractor shall maintain an adequate inspection system and perform such inspections as will ensure that the work performed under the contract conforms to contract requirements. The Contractor shall maintain complete inspection records and make them available to the Government. All work shall be conducted under the general direction of the Contracting Officer and is subject to Government inspection and test at all places and at all reasonable times before acceptance to ensure strict compliance with the terms of the contract.

C. Government inspections and tests are for the sole benefit of the Government and do not—

1. Relieve the Contractor of responsibility for providing adequate quality control measures;
2. Relieve the Contractor of responsibility for damage to or loss of the material before acceptance;
3. Constitute or imply acceptance; or
4. Affect the continuing rights of the Government after acceptance of the completed work under paragraph (i) of this section.

D. The presence or absence of a Government inspector does not relieve the Contractor from any contract requirement, nor is the inspector authorized to change any term or condition of the specification without the Contracting Officer's written authorization.

E. The Contractor shall promptly furnish, at no increase in contract price, all facilities, labor, and material reasonably needed for performing such safe and convenient inspections and tests as may be required by the Contracting Officer. The Government may charge to the Contractor any additional cost of inspection or test when work is not ready at the time specified by the Contractor for inspection or test, or when prior rejection makes re-inspection or retest necessary. The Government shall perform all inspections and tests in a manner that will not unnecessarily delay the work. Special, full size, and performance tests shall be performed as described in the contract.

F. The Contractor shall, without charge, replace or correct work found by the Government not to conform to contract requirements, unless in the public interest the Government consents to accept the work with an appropriate adjustment in contract price. The Contractor shall promptly segregate and remove rejected material from the premises.

G. If the Contractor does not promptly replace or correct rejected work, the Government may—

1. By contract or otherwise, replace or correct the work and charge the cost to the Contractor; or
2. Terminate for default the Contractor's right to proceed.

H. If, before acceptance of the entire work, the Government decides to examine already completed work by removing it or tearing it out, the Contractor, on request, shall promptly furnish all necessary facilities, labor, and material. If the work is found to be defective or nonconforming in any material respect due to the fault of the Contractor or its subcontractors, the Contractor shall defray the expenses of the examination and of satisfactory reconstruction. However, if the work is found to meet contract requirements, the Contracting Officer shall make an equitable adjustment for the additional services involved in the examination and reconstruction, including, if completion of the work was thereby delayed, an extension of time.

I. Unless otherwise specified in the contract, the Government shall accept, as promptly as practicable after completion and inspection, all work required by the contract or that portion of the work the Contracting Officer determines can be accepted separately. Acceptance shall be final and conclusive except for latent defects, fraud, gross mistakes amounting to fraud, or the Government's rights under any warranty or guarantee.

44. Responsibility for Supplies (FAR 52.246-16, Apr 1984)

A. Title to supplies furnished under this contract shall pass to the Government upon formal acceptance, regardless of when or where the Government takes physical possession, unless the contract specifically provides for earlier passage of title.

B. Unless the contract specifically provides otherwise, risk of loss of or damage to supplies shall remain with the Contractor until, and shall pass to the Government upon—

1. Delivery of the supplies to a carrier, if transportation is f.o.b. origin; or

2. Acceptance by the Government or delivery of the supplies to the Government at the destination specified in the contract, whichever is later, if transportation is f.o.b. destination.

C. Paragraph (b) of this clause shall not apply to supplies that so fail to conform to contract requirements as to give a right of rejection. The risk of loss of or damage to such nonconforming supplies remains with the Contractor until cure or acceptance. After cure or acceptance, paragraph (b) of this clause shall apply.

D. Under paragraph (b) of this clause, the Contractor shall not be liable for loss of or damage to supplies caused by the negligence of officers, agents, or employees of the Government acting within the scope of their employment.

45. Warranty of Construction (FAR 52.246-21, Mar 1994)

A. In addition to any other warranties in this contract, the Contractor warrants, except as provided in paragraph (i) of this clause, that work performed under this contract conforms to the contract requirements and is free of any defect in equipment, material, or design furnished, or workmanship performed by the Contractor or any subcontractor or supplier at any tier.

B. This warranty shall continue for a period of 1 year from the date of final acceptance of the work. If the Government takes possession of any part of the work before final acceptance, this warranty shall continue for a period of 1 year from the date the Government takes possession.

C. The Contractor shall remedy at the Contractor's expense any failure to conform, or any defect. In addition, the Contractor shall remedy at the Contractor's expense any damage to Government-owned or controlled real or personal property, when that damage is the result of—

1. The Contractor's failure to conform to contract requirements; or

2. Any defect of equipment, material, workmanship, or design furnished.

D. The Contractor shall restore any work damaged in fulfilling the terms and conditions of this clause. The Contractor's warranty with respect to work repaired or replaced will run for 1 year from the date of repair or replacement.

E. The Contracting Officer shall notify the Contractor, in writing, within a reasonable time after the discovery of any failure, defect, or damage.

F. If the Contractor fails to remedy any failure, defect, or damage within a reasonable time after receipt of notice, the Government shall have the right to replace, repair, or otherwise remedy the failure, defect, or damage at the Contractor's expense.

G. With respect to all warranties, express or implied, from subcontractors, manufacturers, or suppliers for work performed and materials furnished under this contract, the Contractor shall—

A. Obtain all warranties that would be given in normal commercial practice;

B. Require all warranties to be executed, in writing, for the benefit of the Government, if directed by the Contracting Officer; and

C. Enforce all warranties for the benefit of the Government, if directed by the Contracting Officer.

H. In the event the Contractor's warranty under paragraph (b) of this clause has expired, the Government may bring suit at its expense to enforce a subcontractor's, manufacturer's, or supplier's warranty.

I. Unless a defect is caused by the negligence of the Contractor or subcontractor or supplier at any tier, the Contractor shall not be liable for the repair of any defects of material or design furnished by the Government nor for the repair of any damage that results from any defect in Government-furnished material or design.

J. This warranty shall not limit the Government's rights under the Inspection and Acceptance clause of this contract with respect to latent defects, gross mistakes, or fraud.

CONSTRUCTION

46. Site Access Control

A. Any person performing work in Battelle facilities is required to wear a security badge identifying him/her. Only individuals possessing proof of valid United States Citizenship may be issued a security badge. Individuals requiring a badge for access where the presentation of identification (ID) is required must either present a driver's license or ID card from a REAL ID compliant state, or an alternate acceptable form of ID, before "unescorted" access will be given. If work is performed on site, but not within a facility then a security badge is not required.

B. Contractor shall be responsible for controlling access to the Site and ensuring that all Contractor personnel including Subcontractor personnel, delivery drivers and vendors have received adequate and appropriate security and site orientation. Visible symbols such as hard hat stickers, badges, etc., shall be used to indicate the person has Contractor authorization to be on the Site.

C. Unless Battelle issued badges are identified elsewhere in the contract documents as a condition of site access, Contractor shall have general use of areas designated in the contract documents for construction operations during the contract performance period.

D. Personnel protective equipment (PPE) requirements shall be appropriate to the identified hazards present and shall be as indicated in the General and Administrative Requirements for the Work (Division I Requirements) and on the Contractors approved Job Safety Analysis (JSA).

E. Contractor is responsible to ensure that it's direct hired and Subcontractor employees who will work on the Site and are newly hired for the Work, present proof of a negative drug screen dated within the last three (3) months prior to authorizing initial site access. Contractor employees hired prior to the start of this Work and now assigned to this Work must present proof of a negative drug screen dated within the last 12 months.

1. Only drug tests by a Substance Abuse and Mental Health Services (SAMHSA) certified laboratory will be considered acceptable as proof of a negative drug screen.

2. A confirmed positive will deny employee access to the Site for a minimum of one (1) year.

3. Suspect Behavior or Circumstances. If Battelle, or the Contractor or Subcontractor believes that a Contractor or Subcontractor employee's job performance is being adversely affected by drug or substance (including alcohol) use, Battelle may direct the Contractor to remove the employee from the Site and require the employee to submit to drug testing at Contractor's expense. Examples of behavior or circumstances indicating possible drug or substance abuse are possession, sale or delivery, or credible information that an individual is using drugs or abusing alcohol, or an accident or injury.

F. ***Disciplinary Policy and Suspension of Access***

1. General. It is the Contractor's responsibility to implement a policy which provides for discipline of unacceptable behaviors. Disciplinary policy should categorize the severity of the misconduct with a graded approach to implementing the disciplinary actions that result.

2. Contractor may adopt Battelle's model disciplinary policy or submit for approval a Contractor plan.

3. If the Contractor or its Subcontractors fail to have or enforce an approved plan or fail to take appropriate disciplinary action(s) as a result of identified employee misconduct, Battelle will respond to misconduct using a graded approach, considering the nature and severity of the misconduct in accordance with the following general guidelines.

(i). First Infraction. A first infraction could result in actions ranging from a verbal reprimand to denying the employee further access to the site for the remainder of the work.

(ii). Second Infraction. A second infraction, not necessarily of the same type, could result in actions ranging from a written reprimand to denying the employee further access to the site for the remainder of the work.

(iii). Third Infraction. A third infraction could result in suspension from the site ranging from 3-days to 365 days, or the remainder of the work, whichever is longer.

G. ***Battelle Issued Badges***

1. If a Battelle issued badge is required for persons performing work on the Site, Battelle's Badging office is located in the Environmental Technology Building (ETB), Room 1104. The ETB Building address is 3200 Q Avenue, Richland WA 99352. Badges may be picked up between the hours of 7:30 A.M. to 4:00 P.M. Monday through Friday (excluding holidays).

2. Employee Termination / Completion of the Work. Upon termination of employment or completion of the Contractors work, and before final payment shall be made, all badges and dosimeters issued to Contractor employees shall be returned to the issuing office.

3. Lost badges and/or dosimeter shall be reported immediately upon discovery to Battelle. Battelle will charge Contractor $100 for each badge or dosimeter not returned. The charge shall be deducted from payments otherwise due the Contractor. Refund of charges, previously collected for badges and/or dosimeters subsequently found will not be made after the date of final payment to the Contractor.

4. Training required for a Battelle issued Badge

(i). GERT / LAB Orientation. If Contractor employees are required to successfully complete General Employee Radiation Training (GERT) / Battelle Laboratory (LAB) Orientation, GERT / LAB Orientation is estimated to take four (4) hours. The employee cost of the orientation shall be by the Contractor.

(ii). Vendor/Contractor Orientation for non-Battelle personnel. If Contractor employees are required to successfully complete Vendor/Contractor Orientation, it is estimated to take 2 ½ hours. The employee cost of the orientation shall be by the Contractor.

(iii). Other Required Training. Other Battelle sponsored training identified as required for performance of the contract work will be provided to the Contractor at no cost for the trainer and/or course fees. Contractor shall be responsible for the cost of the employee's time to attend. Contractor shall allow Battelle two (2) weeks to schedule the training after proper notification.

(iv). Failed Training / Tests and Contractor —No-Shows. Contractor shall be responsible for the trainer / classroom costs associated with Contractor employees that have either failed to successfully complete a required training or have failed to show up for a scheduled training date. Costs to be charged the Contractor for retaking failed training or rescheduling due to no-shows is: $352.25 (each) for Radiation Worker I and/or II including GAP and refresher training; Lock & Tag training is $348.85; Respiratory Protection Worker training is $352.25;

Asbestos Awareness, Hot Work Fire Watch and Lock-Out-Tag-Out Gap training are all $350.75, all other Battelle sponsored training is $32.11.

(v). Offsite Training. Contractor shall be responsible for all offsite training as required for performance of the contract work. Training offered at the HAMMER facility is considered offsite, therefore the Contractor shall be responsible for course registration and payment of any fees. Quantitative Mask-Fit or additional respiratory training conducted at the HAMMER facility is considered offsite training, therefore the Contractor shall be responsible for course registration and payment of any fees.

47. Prohibited Articles

A. Prohibited Articles Anywhere. The following are Prohibited Articles anywhere on the Site and offsite locations under the cognizance of Battelle or the DOE:

1. Dangerous weapons
2. Explosives, ammunition, and incendiary devices
3. Controlled substances and drug paraphernalia
4. Alcoholic beverages
5. Contraband (includes other items prohibited by law).

B. Exclusion, Limited and/or Protected Areas. The following are Prohibited Articles within Exclusion, Limited and/or Protected Areas:

1. All items listed above, and
2. Privately owned recording equipment
3. Privately owned cameras (still, motion, video)
4. Privately owned computers and associated media (including palm pilots)
5. Privately owned cellular telephones
6. Privately owned radio transmitters.

48. Work Limitations, Restrictions & Requirements

A. ***Time***. "Time," if stated as a number of days, is calculated using calendar days, unless otherwise specified, and will include Saturdays, Sundays, and legal holidays. If the last day of the Contract period of performance falls on a Saturday, Sunday, or legal holiday, then the period shall include the next working day. The following holidays shall be non-work days under this Contract unless otherwise directed by Battelle:

New Year's Day

Memorial Day

Independence Day

Labor Day

Thanksgiving Day and the day after

Christmas Eve and Christmas Day

B. ***Working Hours***. Unless identified otherwise in the Division 1 General Requirements for the contract work, normal working hours are Monday through Friday from 7:00am to 3:30pm. The Contractor shall not perform work at the Site other than during normal working hours without prior written approval. The Contractor shall give Battelle at least two (2) hours prior notice if its employees are to be working after the normal shift period Monday through Friday. The Contractor shall give Battelle notice on the prior working day if its employees will be working before normal shift hours, Monday through Friday, or will be working at any time on Saturday, Sunday, or holidays. The notice shall include the type of work to be performed, location of work, date and hours of work, and description of any heavy equipment to be used. Battelle advance approval is required any time work is to be performed at other than normal shift periods.

C. ***Overhead Work Restrictions***. Under no conditions shall the Contractor operate or move cranes, hoists or similar equipment within 20 feet of overhead electrical conductors, guy wires, or substations, unless prior authorization for such operations is obtained from Battelle, giving full details of the method of equipment operations. Authorization from Battelle shall also be obtained when transporting materials, machinery, or other equipment, which establishes a height exceeding 15 feet from the road and/or ground surface.

D. ***Oversize Loads***. An Oversize Load permit is required when the vehicle or load exceeds: Width -8'-6" x Height –14ft x Length –40ft (single unit), or 48ft (single trailing unit). Contact Battelle to obtain the permit.

E. ***Moving Heavy Equipment***. The Contractor shall notify Battelle at least two (2) working days prior to the date it proposes to move any heavy equipment into or from the Worksite and shall not move any such equipment into or from the Worksite until receipt of written approval from Battelle. Heavy equipment will not be allowed to travel across existing paved roadways unless rubber tires or other adequate protection such as heavy planking protects such roadway. Movement of heavy equipment equipped with crawler-type treads on existing paved surfaces is forbidden and such equipment must be transported to the Worksite on rubber- tired trailers. Upon completion of the Work, the equipment shall be promptly removed from the Worksite.

F. ***System Outages***. Work, which requires any existing building utility system (including fire protection) to be taken out of service, shall be scheduled and performed so that the length of time the utility is out of service is held to a minimum. All material for the alteration and tie-in work shall be on hand when each utility service interruption is scheduled. The Contractor shall notify Battelle not less than five (5) working days prior to each required utility shutdown. All tie-in work shall be scheduled and performed so that the shutdown time will not exceed four (4) hours for water and two (2) hours for electrical or fire alarm. Battelle shall approve methods of performing the tie-in work prior to any utility system outage. Prior approval must be obtained for connection to and use of existing fire hydrants.

G. ***Excavation Requirements***.

1. Definition: "Excavations include any operation in which earth, rock, or other material in the ground

(below existing grade) is moved, removed, or otherwise displaced by means or use of any hand tools, mechanical equipment or explosives."

2. Excavation permitting is required when grading, trenching, digging, ditching, drilling, tunneling, scraping, pipe plowing, and driving ground rods or posts, at a depth of 12 inches or greater.

3. Where required, the Contractor shall provide an adequate supporting mechanism to prevent undermining or movement of any load bearing concrete slabs or footings. All excavations shall comply with OSHA and DOSH regulations.

4. In the event any underground pipe line, conduit or other object not shown on the drawings or otherwise indicated in the Specifications is encountered, the Contractor shall immediately stop work and notify Battelle.

5. Except as otherwise specified, protection (and restoration) of existing facilities shall be as specified in section titled "Protection of Existing Utilities." All underground piping, conduits, ducts, and other utilities shall be satisfactorily shored, braced and/or guyed as specified in the above referenced section.

6. Contractors shall hand-dig within five (5) feet of all known utilities.

H. ***Blind Penetration Requirements***.

1. All "Blind Penetrations" where the Contractor must penetrate into or through a wall, ceiling, floor or similar obstruction and the path of the penetration is not visible requires a Battelle Permit. The Contractor shall notify Battelle five (5) days in advance of any planned Blind Penetrations to allow Battelle time to issue the permit.

2. The Contractor shall perform a sub-surface scan using penetrating radar of the surface to be blind penetrated. The Contractor shall physically mark the location of any suspected embedment and do not proceed without release by Battelle if a suspected embedment is marked within 8 inches of the planned penetration.

3. All potentially energized circuits or sources in the proximity of the penetration shall be locked out and tagged by the Contractor in a de-energized condition.

4. All energized Contractor equipment used in blind penetrations shall be equipped with a "kill switch" or "drill stop" to effectively stop the Contractor equipment when the drill or energized penetrating equipment comes in contact with any metallic object.

5. Contractor shall notify Battelle immediately upon hitting an obstruction and/or the kill switch de-energizes the penetrating equipment. Disengaging the kill switch requires Battelle concurrence.

6. In addition to whatever other PPE the Contractor considers necessary for a Blind Penetration, the worker performing the penetration operation shall wear class 00, 500 volt rated, insulated gloves or insulated gloves rated for the voltage potential during the penetrating activity.

I. ***Adverse Weather Conditions.*** To insure worker safety, work or portions of work may be temporarily and incrementally shut down due to high winds, lighting, or other inclement weather as determined by Battelle. Contractor will not be additionally compensated in terms of cost or schedule for weather related shutdowns. Battelle will issue weather warnings via radio, telephone, public announcement, or in person. The Contractor shall ensure that all contractor and subcontractor personnel are apprised of the warnings and take the required actions as stated below.

1. Sustained winds greater than 15 mph – the necessity for crane operations will be closely scrutinized

2. Sustained winds greater than 25 mph and/or gusts greater than 40 mph – all crane activities must cease and be secured. All loose outdoor material shall be secured. The Contractor's Safety Supervisor shall evaluate work on roofs or elevated work surfaces before continuing. All personnel working outdoors are required to wear safety goggles. Depending on dust hazards, work may be stopped. Personnel may be directed to shelter.

3. Sustained winds greater than 30 mph and/or gusts greater than 45 mph – all outdoor work activities may be stopped. Personnel may be directed to shelter.

4. Sustained winds greater than 50 mph – outdoor work activities will be curtailed and limited to those approved by Battelle and Contractor's Safety Supervisor. Personnel will be directed to shelter. Site closure may be implemented and all work activities ceased.

5. Thunderstorm/lighting advisory based on lighting activity within a 30 mile radius of the site – Contractor personnel shall not work on roofs or elevated surfaces. Personnel shall stay away from equipment such as drilling rigs, cranes, boom trucks, or elevated work platforms. The "30-30 Rule" states, when you see lightning, count the time until you hear thunder. If this time is 30 seconds or less go immediately to a safe location. These protective measures shall remain in place until Battelle cancels the warning. The Hanford Weather Station (373-2716) or the National Weather Service Office (NWSO) located in Pendleton (541 276-7832) can be used to detect, locate, and determine if the hazardous weather pattern has dissipated or moved pass the 30 mile radius.

6. Contractor shall be responsible to provide snow removal and ensure safe walking and transfer conditions for walkways and access points around all site offices and work areas and the job-site within the project boundaries.

7. In response to winter storm conditions, Battelle may close or delay the site operation. If so, Battelle will make appropriate announcements and coordinate closures or early dismissals. Battelle's inclement weather hotline phone number is 509 375-2124.

8. Access to PNNL facility roofs during inclement weather may be restricted or delayed until the appropriate mitigation of snow, ice, or frost can be eliminated. Authorization to access facility roofs are controlled by the Building Manager.

49. Performance of Work by the Contractor (FAR 52.236-1, Apr 1984)

The Contractor shall perform on the site, and with its own organization, work equivalent to at least fifteen percent [15%] of the total amount of work to be performed under the contract. This percentage may be reduced by a supplemental agreement to this contract if, during performing the work, the Contractor requests a reduction and the Contracting Officer determines that the reduction would be to the advantage of the Government.

50. Differing Site Conditions (FAR 52.236-2, Apr 1984)

A. The Contractor shall promptly, and before the conditions are disturbed, give a written notice to the Contracting Officer of—

   1. Subsurface or latent physical conditions at the site which differ materially from those indicated in this contract; or

   2. Unknown physical conditions at the site, of an unusual nature, which differ materially from those ordinarily encountered and generally recognized as inhering in work of the character provided for in the contract.

B. The Contracting Officer shall investigate the site conditions promptly after receiving the notice. If the conditions do materially so differ and cause an increase or decrease in the Contractor's cost of, or the time required for, performing any part of the work under this contract, whether or not changed as a result of the conditions, an equitable adjustment shall be made under this clause and the contract modified in writing accordingly.

C. No request by the Contractor for an equitable adjustment to the contract under this clause shall be allowed, unless the Contractor has given the written notice required; *provided*, that the time prescribed in paragraph (a) of this clause for giving written notice may be extended by the Contracting Officer.

D. No request by the Contractor for an equitable adjustment to the contract for differing site conditions shall be allowed if made after final payment under this contract.

51. Site Investigation and Conditions Affecting the Work (FAR 52.236-3, Apr 1984)

A. The Contractor acknowledges that it has taken steps reasonably necessary to ascertain the nature and location of the work, and that it has investigated and satisfied itself as to the general and local conditions which can affect the work or its cost, including but not limited to (1) conditions bearing upon transportation, disposal, handling, and storage of materials; (2) the availability of labor, water, electric power, and roads; (3) uncertainties of weather, river stages, tides, or similar physical conditions at the site; (4) the conformation and conditions of the ground; and (5) the character of equipment and facilities needed preliminary to and during work performance. The Contractor also acknowledges that it has satisfied itself as to the character, quality, and quantity of surface and subsurface materials or obstacles to be encountered insofar as this information is reasonably ascertainable from an inspection of the site, including all exploratory work done by the Government, as well as from the drawings and specifications made a part of this contract. Any failure of the Contractor to take the actions described and acknowledged in this paragraph will not relieve the Contractor from responsibility for estimating properly the difficulty and cost of successfully performing the work, or for proceeding to successfully perform the work without additional expense to the Government.

B. The Government assumes no responsibility for any conclusions or interpretations made by the Contractor based on the information made available by the Government. Nor does the Government assume responsibility for any understanding reached or representation made concerning conditions which can affect the work by any of its officers or agents before the execution of this contract, unless that understanding or representation is expressly stated in this contract.

52. Physical Data (FAR 52.236-4, Apr 1984)

Data and information furnished or referred to below is for the Contractor's information. The Government shall not be responsible for any interpretation of or conclusion drawn from the data or information by the Contractor.

53. Material and Workmanship (FAR 52.236-5, Apr 1984)

A. All equipment, material, and articles incorporated into the work covered by this contract shall be new and of the most suitable grade for the purpose intended, unless otherwise specifically provided in this contract. References in the specifications to equipment, material, articles, or patented processes by trade name, make, or catalog number, shall be regarded as establishing a standard of quality and shall not be construed as limiting competition. The Contractor may, at its option, use any equipment, material, article, or process that, in the judgment of the Contracting Officer, is equal to that named in the specifications, unless otherwise specifically provided in this contract.

B. The Contractor shall obtain the Contracting Officer's approval of the machinery and mechanical and other equipment to be incorporated into the work. When requesting approval, the Contractor shall furnish to the Contracting Officer the name of the manufacturer, the model number, and other information concerning the performance, capacity, nature, and rating of the machinery and mechanical and other equipment. When required by this contract or by the Contracting Officer, the Contractor shall also obtain the Contracting Officer's approval of the material or articles which the Contractor contemplates incorporating into the work. When requesting approval, the Contractor shall provide full information concerning the material or articles. When directed to do so, the Contractor shall submit samples for approval at the Contractor's expense, with all shipping charges prepaid. Machinery, equipment, material, and articles that do not have the required approval shall be installed or used at the risk of subsequent rejection.

C. All work under this contract shall be performed in a skillful and workmanlike manner. The Contracting Officer may require, in writing, that the Contractor remove from the work any employee the Contracting Officer deems incompetent, careless, or otherwise objectionable.

54. Superintendence by the Contractor (FAR 52.236-6, Apr 1984)

At all times during performance of this contract and until the work is completed and accepted, the Contractor shall directly superintend the work or assign and have on the worksite a competent superintendent who is satisfactory to the Contracting Officer and has authority to act for the Contractor.

55. Permits and Responsibilities (FAR 52.236-7, Nov 1991)

The Contractor shall, without additional expense to the Government, be responsible for obtaining any necessary licenses and permits, and for complying with any Federal, State, and municipal laws, codes, and regulations applicable to the performance of the work. The Contractor shall also be responsible for all damages to persons or property that occur as a result of the Contractor's fault or negligence. The Contractor shall also be responsible for all materials delivered and work performed until completion and acceptance of the entire work, except for any completed unit of work which may have been accepted under the contract.

56. Other Contracts (FAR 52.236-8, Apr 1984)

The Government may undertake or award other contracts for additional work at or near the site of the work under this contract. The Contractor shall fully cooperate with the other contractors and with Government employees and shall carefully adapt scheduling and performing the work under this contract to accommodate the additional work, heeding any direction that may be provided by the Contracting Officer. The Contractor shall not commit or permit any act that will interfere with the performance of work by any other contractor or by Government employees.

57. Protection of Existing Vegetation, Structures, Equipment, Utilities, and Improvements (FAR 52.236-9, Apr 1984)

A. The Contractor shall preserve and protect all structures, equipment, and vegetation (such as trees, shrubs, and grass) on or adjacent to the work site, which are not to be removed and which do not unreasonably interfere with the work required under this contract. The Contractor shall only remove trees when specifically authorized to do so, and shall avoid damaging vegetation that will remain in place. If any limbs or branches of trees are broken during contract performance, or by the careless operation of equipment, or by workmen, the Contractor shall trim those limbs or branches with a clean cut and paint the cut with a tree-pruning compound as directed by the Contracting Officer.

B. The Contractor shall protect from damage all existing improvements and utilities (1) at or near the work site, and (2) on adjacent property of a third party, the locations of which are made known to or should be known by the Contractor. The Contractor shall repair any damage to those facilities, including those that are the property of a third party, resulting from failure to comply with the requirements of this contract or failure to exercise reasonable care in performing the work. If the Contractor fails or refuses to repair the damage promptly, the Contracting Officer may have the necessary work performed and charge the cost to the Contractor.

58. Operations and Storage Areas (FAR 52.236-10, Apr 1984)

A. The Contractor shall confine all operations (including storage of materials) on Government premises to areas authorized or approved by the Contracting Officer. The Contractor shall hold and save the Government, its officers and agents, free and harmless from liability of any nature occasioned by the Contractor's performance.

B. Temporary buildings (*e.g.,* storage sheds, shops, offices) and utilities may be erected by the Contractor only with the approval of the Contracting Officer and shall be built with labor and materials furnished by the Contractor without expense to the Government. The temporary buildings and utilities shall remain the property of the Contractor and shall be removed by the Contractor at its expense upon completion of the work. With the written consent of the Contracting Officer, the buildings and utilities may be abandoned and need not be removed.

C. The Contractor shall, under regulations prescribed by the Contracting Officer, use only established roadways, or use temporary roadways constructed by the Contractor when and as authorized by the Contracting Officer. When materials are transported in prosecuting the work, vehicles shall not be loaded beyond the loading capacity recommended by the manufacturer of the vehicle or prescribed by any Federal, State, or local law or regulation. When it is necessary to cross curbs or sidewalks, the Contractor shall protect them from damage. The Contractor shall repair or pay for the repair of any damaged curbs, sidewalks, or roads.

59. Use and Possession Prior to Completion (FAR 52.236-11, Apr 1984)

A. The Government shall have the right to take possession of or use any completed or partially completed part of the work. Before taking possession of or using any work, the Contracting Officer shall furnish the Contractor a list of items of work remaining to be performed or corrected on those portions of the work that the Government intends to take possession of or use. However, failure of the Contracting Officer to list any item of work shall not relieve the Contractor of responsibility for complying with the terms of the contract. The Government's possession or use shall not be deemed an acceptance of any work under the contract.

B. While the Government has such possession or use, the Contractor shall be relieved of the responsibility for the loss of or damage to the work resulting from the Government's possession or use, notwithstanding the terms of the clause in this contract entitled "Permits and Responsibilities." If prior possession or use by the Government delays the progress of the work or causes additional expense to the Contractor, an equitable adjustment shall be made in the contract price or the time of completion, and the contract shall be modified in writing accordingly.

60. Cleaning Up (FAR 52.236-12Apr 1984)
The Contractor shall at all times keep the work area, including storage areas, free from accumulations of waste materials. Before completing the work, the Contractor shall remove from the work and premises any rubbish, tools, scaffolding, equipment, and materials that are not the property of the Government. Upon completing the work, the Contractor shall leave the work area in a clean, neat, and orderly condition satisfactory to the Contracting Officer.

61. Availability and Use of Utility Services (FAR 52.236-14, Apr 1984)

A. The Government shall make all reasonably required amounts of utilities available to the Contractor from existing outlets and supplies, as specified in the contract. Unless otherwise provided in the contract, the amount of each utility service consumed shall be charged to or paid for by the Contractor at prevailing rates charged to the Government or, where the utility is produced by the Government, at reasonable rates determined by the Contracting Officer. The Contractor shall carefully conserve any utilities furnished without charge.

B. The Contractor, at its expense and in a workmanlike manner satisfactory to the Contracting Officer, shall install and maintain all necessary temporary connections and distribution lines, and all meters required to measure the amount of each utility used for the purpose of determining charges. Before final acceptance of the work by the Government, the Contractor shall remove all the temporary connections, distribution lines, meters, and associated paraphernalia.

62. Schedules for Construction Contracts (FAR 52.236-15, Apr 1984)

A. The Contractor shall, within five days after the work commences on the contract or another period of time determined by the Contracting Officer, prepare and submit to the Contracting Officer for approval three copies of a practicable schedule showing the order in which the Contractor proposes to perform the work, and the dates on which the Contractor contemplates starting and completing the several salient features of the work (including acquiring materials, plant, and equipment). The schedule shall be in the form of a progress chart of suitable scale to indicate appropriately the percentage of work scheduled for completion by any given date during the period. If the Contractor fails to submit a schedule within the time prescribed, the Contracting Officer may withhold approval of progress payments until the Contractor submits the required schedule.

B. The Contractor shall enter the actual progress on the chart as directed by the Contracting Officer, and upon doing so shall immediately deliver three copies of the annotated schedule to the Contracting Officer. If, in the opinion of the Contracting Officer, the Contractor falls behind the approved schedule, the Contractor shall take steps necessary to improve its progress, including those that may be required by the Contracting Officer, without additional cost to the Government. In this circumstance, the Contracting Officer may require the Contractor to increase the number of shifts, overtime operations, days of work, and/or the amount of construction plant, and to submit for approval any supplementary schedule or schedules in chart form as the Contracting Officer deems necessary to demonstrate how the approved rate of progress will be regained.

C. Failure of the Contractor to comply with the requirements of the Contracting Officer under this clause shall be grounds for a determination by the Contracting Officer that the Contractor is not prosecuting the work with sufficient diligence to ensure completion within the time specified in the contract. Upon making this determination, the Contracting Officer may terminate the Contractor's right to proceed with the work, or any separable part of it, in accordance with the default terms of this contract.

63. Layout of Work (FAR 52.236-17, Apr 1984)

The Contractor shall lay out its work from Government established base lines and bench marks indicated on the drawings, and shall be responsible for all measurements in connection with the layout. The Contractor shall furnish, at its own expense, all stakes, templates, platforms, equipment, tools, materials, and labor required to lay out any part of the work. The Contractor shall be responsible for executing the work to the lines and grades that may be established or indicated by the Contracting Officer. The Contractor shall also be responsible for maintaining and preserving all stakes and other marks established by the Contracting Officer until authorized to remove them. If such marks are destroyed by the Contractor or through its negligence before their removal is authorized, the Contracting Officer may replace them and deduct the expense of the replacement from any amounts due or to become due to the Contractor.

64. Organization and Direction of the Work (FAR 52.236-19, Apr 1984)

A. When this contract is executed, the Contractor shall submit to the Contracting Officer a chart showing the general executive and administrative organization, the personnel to be employed in connection with the work under this contract, and their respective duties. The Contractor shall keep the data furnished current by supplementing it as additional information becomes available.

B. Work performance under this contract shall be under the full-time resident direction of (1) the Contractor, if the Contractor is an individual; (2) one or more principal partners, if the Contractor is a partnership; or (3) one or more senior officers, if Contractor is a corporation, association, or similar legal entity. However, if the Contracting Officer approves, the Contractor may be represented in the direction of the work by a specific person or persons holding positions other than those identified in this paragraph.

65. Specifications and Drawings for Construction (FAR 52.236-21, Feb 1997)

A. The Contractor shall keep on the work site a copy of the drawings and specifications and shall at all times give the Contracting Officer access thereto. Anything mentioned in the specifications and not shown on the drawings, or shown on the drawings and not mentioned in the specifications, shall be of like effect as if shown or mentioned in both. In case of difference between drawings and specifications, the specifications shall govern. In case of discrepancy in the figures, in the drawings, or in the specifications,

the matter shall be promptly submitted to the Contracting Officer, who shall promptly make a determination in writing. Any adjustment by the Contractor without such a determination shall be at its own risk and expense. The Contracting Officer shall furnish from time to time such detailed drawings and other information as considered necessary, unless otherwise provided.

B. Wherever in the specifications or upon the drawings the words "directed," "required," "ordered," "designated," "prescribed," or words of like import are used, it shall be understood that the "direction," "requirement," "order," "designation," or "prescription," of the Contracting Officer is intended and similarly the words "approved," "acceptable," "satisfactory," or words of like import shall mean "approved by," or "acceptable to," or "satisfactory to" the Contracting Officer, unless otherwise expressly stated.

C. Where "as shown," "as indicated," "as detailed," or words of similar import are used, it shall be understood that the reference is made to the drawings accompanying this contract unless stated otherwise. The word "provided" as used herein shall be understood to mean "provide complete in place," that is "furnished and installed."

D. Shop drawings means drawings, submitted to the Government by the Contractor, subcontractor, or any lower tier subcontractor pursuant to a construction contract, showing in detail (1) the proposed fabrication and assembly of structural elements, and (2) the installation (*i.e.,* fit, and attachment details) of materials or equipment. It includes drawings, diagrams, layouts, schematics, descriptive literature, illustrations, schedules, performance and test data, and similar materials furnished by the contractor to explain in detail specific portions of the work required by the contract. The Government may duplicate, use, and disclose in any manner and for any purpose shop drawings delivered under this contract.

E. If this contract requires shop drawings, the Contractor shall coordinate all such drawings, and review them for accuracy, completeness, and compliance with contract requirements and shall indicate its approval thereon as evidence of such coordination and review. Shop drawings submitted to the Contracting Officer without evidence of the Contractor's approval may be returned for resubmission. The Contracting Officer will indicate an approval or disapproval of the shop drawings and if not approved as submitted shall indicate the Government's reasons therefor. Any work done before such approval shall be at the Contractor's risk. Approval by the Contracting Officer shall not relieve the Contractor from responsibility for any errors or omissions in such drawings, nor from responsibility for complying with the requirements of this contract, except with respect to variations described and approved in accordance with (f) of this clause.

F. If shop drawings show variations from the contract requirements, the Contractor shall describe such variations in writing, separate from the drawings, at the time of submission. If the Contracting Officer approves any such variation, the Contracting Officer shall issue an appropriate contract modification, except that, if the variation is minor or does not involve a change in price or in time of performance, a modification need not be issued.

G. The Contractor shall submit to the Contracting Officer for approval four copies (unless otherwise indicated) of all shop drawings as called for under the various headings of these specifications. Three sets (unless otherwise indicated) of all shop drawings, will be retained by the Contracting Officer and one set will be returned to the Contractor. Upon completing the work under this contract, the Contractor shall furnish a complete set of all shop drawings as finally approved. These drawings shall show all changes and revisions made up to the time the equipment is completed and accepted.

66. Back-Charges

A. When costs are sustained by Battelle or the Government as a result of Contractor failure in whole or in part to execute its responsibility under the terms of this Agreement, such costs are considered the responsibility of the Contractor and will be "back-charged." Contractor actions having potential to result in back-charges include:

1. Environmental, safety, health, or quality assurance violations;
2. Rework necessary to meet Contract requirements;
3. Support of Contractor's recovery schedule;
4. Inspections by Battelle not performed, as scheduled, due to incomplete or inadequate status of the work for which Contractor is at fault;
5. Inspections that must be repeated by Battelle due to errors, omissions, mismanagement or any fault of Contractor;
6. Vendor data review and processing as a result of re-submittals in excess of three (3), which are attributable to inadequate Contractor coordination or preparation;
7. Contractor's failure to restore all Battelle and/or Government-owned property, facilities, utilities, or systems, including replacement of survey stakes, to "like-for-like" condition after use or damage by Contractor;
8. Contractor's failure to adequately repair and/or replace property of a third party damaged by Subcontractor;
9. Subcontractor's failure to maintain the cleanliness and orderly arrangement of the work site during construction and at final acceptance, within reason, to the satisfaction of Contractor;
10. Subcontractor's failure to return or transfer to another project all security badges will result in a charge to the Subcontractor in the amount of $250.00 per badge; and
11. Hazardous or environmentally detrimental spills caused by Subcontractor with clean-up performed by Contractor will be charged to Subcontractor.

B. Notification

Upon identification of an actual or anticipated back-charge, Battelle will provide Contractor a written notice which shall describe the work to be performed, the schedule for performance, and the cost to be charged the Contractor. The cost may include:

1. actual labor cost,
2. actual material cost including transportation, and
3. taxes, levies, duties and assessments.

C. Contractor Acceptance

Contractor is required to accept the back-charge or re-perform work at Contractor's cost. In the event Contractor refuses to accept or agrees to performance of the work within 24 hours after receipt of Battelle's notice, Battelle may elect to proceed with the back-charge work and withhold (set-off) the cost from Contractor's payment. Battelle has the right to set-off such cost against any amount payable to the Contractor whether or not in connection with this Agreement.

67. Vendor Data Requirements

A. Contractor shall furnish to Battelle copies of required data for disposition sufficiently in advance of the date that the material/equipment is required to be installed to meet the accepted construction schedule. The Vendor Data Schedule (VDS) (also called a “submittal log”) summarizes the submittal requirements of the Subcontract and generally specifies the timing for each required submittal. Vendor data for all material and equipment requiring a disposition shall be submitted, reviewed, assigned a disposition code by Battelle and returned to Contractor.

B. Contractor shall perform no work for which the vendor data has not been reviewed and dispositioned. Any delay caused by Contractor's failure to submit vendor data in a timely manner for Battelle review will not be excusable or compensable. If submitted vendor data items are unacceptable, no excusable delay shall accrue there from, regardless of the number of re-submittals made by Contractor or lower- tiers.

C. Battelle’s vendor data disposition will not affect or relieve Contractor from responsibility for performance of work in compliance with the Contract. Vendor data causing any change to design details, layouts, calculations, analyses, test methods, procedures or any other Contract requirement shall be submitted with a written description of the affected change.

D. Contractor shall submit, concurrent with each invoice, an updated Construction Vendor Data Submittal Log (CVDSL). Failure to submit the CVDSL may result in withholding of payment until CVDSL receipt. Information provided on the CVDSL shall correlate with Contractor’s accepted construction schedule to assure prosecution of the work in accordance with the said construction schedule. The CVDSL shall clearly indicate expected or actual submittal dates and the disposition status of all submitted data.

E. Substitutions require Battelle approval. Refer to the clause title “Brand Name or Equal.”

F. Samples.

1. When samples are required, they shall be furnished at Contractor’s expense in accordance with the clause entitled "Material and Workmanship." Samples shall be submitted within the time specified, or if no time is specified, within a reasonable time before use to permit inspection and testing. Samples shall be shipped prepaid, delivered as directed by Battelle, and shall be properly marked to show the name of the material, trademark of manufacturer, place of origin, number and name of work where the material represented by the sample will be used, and the name of the Contractor submitting the sample.
2. Samples not subject to destructive testing may be retained by Battelle until completion of the construction. If requested in writing by the Contractor at the time of submission, samples will be returned at Contractor’s expense upon completion of the construction. Failure of any samples to pass specified requirements will be sufficient cause for refusal to consider further any samples from the same manufacturer whose materials failed to pass testing requirements.

68. Cooperation with Others

A. Contractor may undertake or award other subcontracts at or near the site of the work under the Subcontract. Subcontractor shall fully cooperate with the other Subcontractors and with Contractor employees and shall carefully adapt scheduling and performing the work under the Subcontract to accommodate the work by others, heeding any direction that may be provided by Contractor. Subcontractor shall not commit or permit any act that shall interfere with the performance of work by any other Subcontractor or Contractor employees.

B. Concurrent Work and Interface Responsibilities

1. When portions of the construction work under the Subcontract are performed near active operating areas, Subcontractor shall plan its construction work so as not to interfere with the operation of these facilities and shall maintain free and clear access to same for routine operational and maintenance activities performed by Contractor.
2. In addition, Subcontractor shall carefully coordinate all construction activities with Contractor so as to avoid conflicts and unnecessary delays in construction. Except for authorized shutdowns for the tie-in of newly constructed facilities, construction activities shall not disrupt normal operation of existing plant facilities.

CLAUSES INCORPORATED FOR CONTRACTS COVERED BY CONSTRUCTION WAGE RATE REQUIREMENTS – LABOR STANDARDS

69. Contract Work Hours and Safety Standards – Overtime Compensation (FAR 52.222-4, Mar 2018)

A. *Overtime requirements*. No Contractor or subcontractor employing laborers or mechanics (see Federal Acquisition Regulation 22.300) shall require or permit them to work over 40 hours in any workweek unless they are paid at least 1 and 1/2 times the basic rate of pay for each hour worked over 40 hours.

B. *Violation; liability for unpaid wages; liquidated*

damages. The responsible Contractor and subcontractor are liable for unpaid wages if they violate the terms in paragraph (a) of this clause. In addition, the Contractor and subcontractor are liable for liquidated damages payable to the Government. The Contracting Officer will assess liquidated damages at the rate specified at 29 CFR 5.5(b)(2) per affected employee for each calendar day on which the employer required or permitted the employee to work in excess of the standard workweek of 40 hours without paying overtime wages required by the Contract Work Hours and Safety Standards statute (found at 40 U.S.C. chapter 37). In accordance with the Federal Civil Penalties Inflation Adjustment Act of 1990 (28 U.S.C. 2461 Note), the Department of Labor adjusts this civil monetary penalty for inflation no later than January 15 each year.

C. *Withholding for unpaid wages and liquidated damages*. The Contracting Officer will withhold from payments due under the contract sufficient funds required to satisfy any Contractor or subcontractor liabilities for unpaid wages and liquidated damages. If amounts withheld under the contract are insufficient to satisfy Contractor or subcontractor liabilities, the Contracting Officer will withhold payments from other Federal or federally assisted contracts held by the same Contractor that are subject to the Contract Work Hours and Safety Standards statute.

D. Payrolls and basic records.

(1) The Contractor and its subcontractors shall maintain payrolls and basic payroll records for all laborers and mechanics working on the contract during the contract and shall make them available to the Government until 3 years after contract completion. The records shall contain the name and address of each employee, social security number, labor classifications, hourly rates of wages paid, daily and weekly number of hours worked, deductions made, and actual wages paid. The records need not duplicate those required for construction work by Department of Labor regulations at 29 CFR 5.5(a)(3) implementing the Construction Wage Rate Requirements statute.

(2) The Contractor and its subcontractors shall allow authorized representatives of the Contracting Officer or the Department of Labor to inspect, copy, or transcribe records maintained under paragraph (d)(1) of this clause. The Contractor or subcontractor also shall allow authorized representatives of the Contracting Officer or Department of Labor to interview employees in the workplace during working hours.

E. *Subcontracts*. The Contractor shall insert the provisions set forth in paragraphs (a) through (d) of this clause in subcontracts that may require or involve the employment of laborers and mechanics and require subcontractors to include these provisions in any such lower tier subcontracts. The Contractor shall be responsible for compliance by any subcontractor or lower-tier subcontractor with the provisions set forth in paragraphs (a) through (d) of this clause.

70. Construction Wage Rate Requirements (FAR 52.222-6, Aug 2018)

A. Definition.—"Site of the work"—

1. Means—

   (i). The primary site of the work. The physical place or places where the construction called for in the contract will remain when work on it is completed; and

   (ii). The secondary site of the work, if any. Any other site where a significant portion of the building or work is constructed, provided that such site is—

      a. Located in the United States; and

      b. Established specifically for the performance of the contract or project;

2. Except as provided in paragraph (3) of this definition, includes any fabrication plants, mobile factories, batch plants, borrow pits, job headquarters, tool yards, etc., provided—

   (i). They are dedicated exclusively, or nearly so, to performance of the contract or project; and

   (ii). They are adjacent or virtually adjacent to the "primary site of the work" as defined in paragraph (a)(1)(i), or the "secondary site of the work" as defined in paragraph (a)(1)(ii) of this definition;

3. Does not include permanent home offices, branch plant establishments, fabrication plants, or tool yards of a Contractor or subcontractor whose locations and continuance in operation are determined wholly without regard to a particular Federal contract or project. In addition, fabrication plants, batch plants, borrow pits, job headquarters, yards, etc., of a commercial or material supplier which are established by a supplier of materials for the project before opening of bids and not on the Project site, are not included in the "site of the work." Such permanent, previously established facilities are not a part of the "site of the work" even if the operations for a period of time may be dedicated exclusively or nearly so, to the performance of a contract.

B. (1) All laborers and mechanics employed or working upon the site of the work will be paid unconditionally and not less often than once a week, and without subsequent deduction or rebate on any account (except such payroll deductions as are permitted by regulations issued by the Secretary of Labor under the Copeland Act (29 CFR Part 3)), the full amount of wages and bona fide fringe benefits (or cash equivalents thereof) due at time of payment computed at rates not less than those contained in the wage determination of the Secretary of Labor which is attached hereto and made a part hereof, or as may be incorporated for a secondary site of the work, regardless of any contractual relationship which may be alleged to exist between the Contractor and such laborers and mechanics. Any wage determination incorporated for a secondary site of the work shall be effective from the first day on which work under the contract was performed at that site and shall be incorporated without any adjustment in contract price or estimated cost. Laborers employed by the construction Contractor or construction subcontractor that are transporting portions of the

building or work between the secondary site of the work and the primary site of the work shall be paid in accordance with the wage determination applicable to the primary site of the work.

(2) Contributions made or costs reasonably anticipated for bona fide fringe benefits under section 1(b)(2) of the Construction Wage Rate Requirements statute on behalf of laborers or mechanics are considered wages paid to such laborers or mechanics, subject to the provisions of paragraph (e) of this clause; also, regular contributions made or costs incurred for more than a weekly period (but not less often than quarterly) under plans, funds, or programs which cover the particular weekly period, are deemed to be constructively made or incurred during such period.

(3) Such laborers and mechanics shall be paid not less than the appropriate wage rate and fringe benefits in the wage determination for the classification of work actually performed, without regard to skill, except as provided in the clause entitled Apprentices and Trainees. Laborers or mechanics performing work in more than one classification may be compensated at the rate specified for each classification for the time actually worked therein; provided that the employer's payroll records accurately set forth the time spent in each classification in which work is performed.

(4) The wage determination (including any additional classifications and wage rates conformed under paragraph (c) of this clause) and the Construction Wage Rate Requirements (Davis-Bacon Act) poster (WH-1321) shall be posted at all times by the Contractor and its subcontractors at the primary site of the work and the secondary site of the work, if any, in a prominent and accessible place where it can be easily seen by the workers.

C. (1) The Contracting Officer shall require that any class of laborers or mechanics which is not listed in the wage determination and which is to be employed under the contract shall be classified in conformance with the wage determination. The Contracting Officer shall approve an additional classification and wage rate and fringe benefits therefor only when all the following criteria have been met:

(i). The work to be performed by the classification requested is not performed by a classification in the wage determination.

(ii). The classification is utilized in the area by the construction industry.

(iii). The proposed wage rate, including any bona fide fringe benefits, bears a reasonable relationship to the wage rates contained in the wage determination.

(2) If the Contractor and the laborers and mechanics to be employed in the classification (if known), or their representatives, and the Contracting Officer agree on the classification and wage rate (including the amount designated for fringe benefits, where appropriate), a report of the action taken shall be sent by the Contracting Officer to the Administrator of the:

Wage and Hour Division
U.S. Department of Labor
Washington, DC 20210

The Administrator or an authorized representative will approve, modify, or disapprove every additional classification action within 30 days of receipt and so advise the Contracting Officer or will notify the Contracting Officer within the 30-day period that additional time is necessary.

(3) In the event the Contractor, the laborers or mechanics to be employed in the classification, or their representatives, and the Contracting Officer do not agree on the proposed classification and wage rate (including the amount designated for fringe benefits, where appropriate), the Contracting Officer shall refer the questions, including the views of all interested parties and the recommendation of the Contracting Officer, to the Administrator of the Wage and Hour Division for determination. The Administrator, or an authorized representative, will issue a determination within 30 days of receipt and so advise the Contracting Officer or will notify the Contracting Officer within the 30-day period that additional time is necessary.

(4) The wage rate (including fringe benefits, where appropriate) determined pursuant to paragraphs (c)(2) and (c)(3) of this clause shall be paid to all workers performing work in the classification under this contract from the first day on which work is performed in the classification.

D. Whenever the minimum wage rate prescribed in the contract for a class of laborers or mechanics includes a fringe benefit which is not expressed as an hourly rate, the Contractor shall either pay the benefit as stated in the wage determination or shall pay another bona fide fringe benefit or an hourly cash equivalent thereof.

E. If the Contractor does not make payments to a trustee or other third person, the Contractor may consider as part of the wages of any laborer or mechanic the amount of any costs reasonably anticipated in providing bona fide fringe benefits under a plan or program; provided, That the Secretary of Labor has found, upon the written request of the Contractor, that the applicable standards of the Construction Wage Rate Requirements statute have been met. The Secretary of Labor may require the Contractor to set aside in a separate account assets for the meeting of obligations under the plan or program.

71. Withholding of Funds (FAR 52.222-7, May 2014)

The Contracting Officer shall, upon his or her own action or upon written request of an authorized representative of the Department of Labor, withhold or cause to be withheld from the Contractor under this contract or any other Federal contract with the same Prime Contractor, or any other federally assisted contract subject to prevailing wage requirements, which is held by the same Prime Contractor, so much of the accrued payments or advances as may be considered necessary to pay laborers and mechanics, including apprentices, trainees, and helpers, employed by the Contractor or any subcontractor the full amount of wages required by the contract. In the event of

failure to pay any laborer or mechanic, including any apprentice, trainee, or helper, employed or working on the site of the work, all or part of the wages required by the contract, the Contracting Officer may, after written notice to the Contractor, take such action as may be necessary to cause the suspension of any further payment, advance, or guarantee of funds until such violations have ceased.

72. Payrolls and Basic Records (FAR 52.222-8, Aug 2018)

A. Payrolls and basic records relating thereto shall be maintained by the Contractor during the course of the work and preserved for a period of 3 years thereafter for all laborers and mechanics working at the site of the work. Such records shall contain the name, address, and social security number of each such worker, his or her correct classification, hourly rates of wages paid (including rates of contributions or costs anticipated for bona fide fringe benefits or cash equivalents thereof of the types described in40 U.S.C. 3141[2][B] {Construction Wage Rate Requirement statute}), daily and weekly number of hours worked, deductions made, and actual wages paid. Whenever the Secretary of Labor has found, under paragraph (d) of the clause entitled Construction Wage Rate Requirements, that the wages of any laborer or mechanic include the amount of any costs reasonably anticipated in providing benefits under a plan or program described in 40 U.S.C. 3141[2][B], the Contractor shall maintain records which show that the commitment to provide such benefits is enforceable, that the plan or program is financially responsible, and that the plan or program has been communicated in writing to the laborers or mechanics affected, and records which show the costs anticipated or the actual cost incurred in providing such benefits. Contractors employing apprentices or trainees under approved programs shall maintain written evidence of the registration of apprenticeship programs and certification of trainee programs, the registration of the apprentices and trainees, and the ratios and wage rates prescribed in the applicable programs.

B. (1) The Contractor shall submit weekly for each week in which any contract work is performed a copy of all payrolls to the Contracting Officer. The payrolls submitted shall set out accurately and completely all of the information required to be maintained under paragraph (a) of this clause, except that full social security numbers and home addresses shall not be included on weekly transmittals. Instead the payrolls shall only need to include an individually identifying number for each employee (e.g., the last four digits of the employee's social security number). The required weekly payroll information may be submitted in any form desired. Optional Form WH-347 is available for this purpose and may be obtained from the U.S. Department of Labor Wage and Hour Division website at http://www.dol.gov/whd/forms/wh347.pdf. The Prime Contractor is responsible for the submission of copies of payrolls by all subcontractors. Contractors and subcontractors shall maintain the full social security number and current address of each covered worker, and shall provide them upon request to the Contracting Officer, the Contractor, or the Wage and Hour Division of the Department of Labor for purposes of an investigation or audit of compliance with prevailing wage requirements. It is not a violation of this section for a Prime Contractor to require a subcontractor to provide addresses and social security numbers to the Prime Contractor for its own records, without weekly submission to the Contracting Officer.

2. Each payroll submitted shall be accompanied by a "Statement of Compliance," signed by the Contractor or subcontractor or his or her agent who pays or supervises the payment of the persons employed under the contract and shall certify—

(i). That the payroll for the payroll period contains the information required to be maintained under paragraph (a) of this clause and that such information is correct and complete;

(ii). That each laborer or mechanic (including each helper, apprentice, and trainee) employed on the contract during the payroll period has been paid the full weekly wages earned, without rebate, either directly or indirectly, and that no deductions have been made either directly or indirectly from the full wages earned, other than permissible deductions as set forth in the Regulations, 29 CFR Part 3; and

(iii). That each laborer or mechanic has been paid not less than the applicable wage rates and fringe benefits or cash equivalents for the classification of work performed, as specified in the applicable wage determination incorporated into the contract.

3. The weekly submission of a properly executed certification set forth on the reverse side of Optional Form WH-347 shall satisfy the requirement for submission of the "Statement of Compliance" required by paragraph (b)(2) of this clause.

4. The falsification of any of the certifications in this clause may subject the Contractor or subcontractor to civil or criminal prosecution under Section 1001 of Title 18 and Section 3729 of Title 31 of the United States Code.

C. The Contractor or subcontractor shall make the records required under paragraph (a) of this clause available for inspection, copying, or transcription by the Contracting Officer or authorized representatives of the Contracting Officer or the Department of Labor. The Contractor or subcontractor shall permit the Contracting Officer or representatives of the Contracting Officer or the Department of Labor to interview employees during working hours on the job. If the Contractor or subcontractor fails to submit required records or to make them available, the Contracting Officer may, after written notice to the Contractor, take such action as may be necessary to cause the suspension of any further payment. Furthermore, failure to submit the required records upon request or to make such records available may be grounds for debarment action pursuant to 29 CFR 5.12.

73. Apprentices and Trainees (FAR 52.222-9, July 2005)

A. Apprentices.

1. An apprentice will be permitted to work at less than the predetermined rate for the work performed when employed—

   A. Pursuant to and individually registered in a bona fide apprenticeship program registered with the U.S. Department of Labor, Employment and Training Administration, Office of Apprenticeship Training, Employer, and Labor Services (OATELS) or with a State Apprenticeship Agency recognized by the OATELS; or

   B. In the first 90 days of probationary employment as an apprentice in such an apprenticeship program, even though not individually registered in the program, if certified by the OATELS or a State Apprenticeship Agency (where appropriate) to be eligible for probationary employment as an apprentice.

2. The allowable ratio of apprentices to journeymen on the job site in any craft classification shall not be greater than the ratio permitted to the Contractor as to the entire work force under the registered program.

3. Any worker listed on a payroll at an apprentice wage rate, who is not registered or otherwise employed as stated in paragraph (a)(1) of this clause, shall be paid not less than the applicable wage determination for the classification of work actually performed. In addition, any apprentice performing work on the job site in excess of the ratio permitted under the registered program shall be paid not less than the applicable wage rate on the wage determination for the work actually performed.

4. Where a Contractor is performing construction on a project in a locality other than that in which its program is registered, the ratios and wage rates (expressed in percentages of the journeyman's hourly rate) specified in the Contractor's or subcontractor's registered program shall be observed. Every apprentice must be paid at not less than the rate specified in the registered program for the apprentice's level of progress, expressed as a percentage of the journeyman hourly rate specified in the applicable wage determination.

5. Apprentices shall be paid fringe benefits in accordance with the provisions of the apprenticeship program. If the apprenticeship program does not specify fringe benefits, apprentices must be paid the full amount of fringe benefits listed on the wage determination for the applicable classification. If the Administrator determines that a different practice prevails for the applicable apprentice classification, fringes shall be paid in accordance with that determination.

6. In the event OATELS, or a State Apprenticeship Agency recognized by OATELS, withdraws approval of an apprenticeship program, the Contractor will no longer be permitted to utilize apprentices at less than the applicable predetermined rate for the work performed until an acceptable program is approved.

B. Trainees.

   1. Except as provided in 29 CFR 5.16, trainees will not be permitted to work at less than the predetermined rate for the work performed unless they are employed pursuant to and individually registered in a program which has received prior approval, evidenced by formal certification by the U.S. Department of Labor, Employment and Training Administration, Office of Apprenticeship Training, Employer, and Labor Services (OATELS). The ratio of trainees to journeymen on the job site shall not be greater than permitted under the plan approved by OATELS.

   2. Every trainee must be paid at not less than the rate specified in the approved program for the trainee's level of progress, expressed as a percentage of the journeyman hourly rate specified in the applicable wage determination. Trainees shall be paid fringe benefits in accordance with the provisions of the trainee program. If the trainee program does not mention fringe benefits, trainees shall be paid the full amount of fringe benefits listed in the wage determination unless the Administrator of the Wage and Hour Division determines that there is an apprenticeship program associated with the corresponding journeyman wage rate in the wage determination which provides for less than full fringe benefits for apprentices. Any employee listed on the payroll at a trainee rate who is not registered and participating in a training plan approved by the OATELS shall be paid not less than the applicable wage rate in the wage determination for the classification of work actually performed. In addition, any trainee performing work on the job site in excess of the ratio permitted under the registered program shall be paid not less than the applicable wage rate in the wage determination for the work actually performed.

   3. In the event OATELS withdraws approval of a training program, the Contractor will no longer be permitted to utilize trainees at less than the applicable predetermined rate for the work performed until an acceptable program is approved.

C. Equal employment opportunity. The utilization of apprentices, trainees, and journeymen under this clause shall be in conformity with the equal employment opportunity requirements of Executive Order 11246, as amended, and 29 CFR Part 30.

74. Compliance with Copeland Act Requirements (FAR 52.222-10, Feb 1988)

The Contractor shall comply with the requirements of 29 CFR Part 3, which are hereby incorporated by reference in this contract.

75. Subcontracts (Labor Standards) (FAR 52.222-11, May 2014)

A. Definition. "Construction, alteration or repair," as used in this clause, means all types of work done by laborers and mechanics employed by the construction Contractor or construction subcontractor on a particular building or work at the site thereof,

including without limitation—

1. Altering, remodeling, installation (if appropriate) on the site of the work of items fabricated off-site;
2. Painting and decorating;
3. Manufacturing or furnishing of materials, articles, supplies, or equipment on the site of the building or work;
4. Transportation of materials and supplies between the site of the work within the meaning of paragraphs (a)(1)(i) and (ii) of the "site of the work" as defined in the FAR clause at 52.222-6, Construction Wage Rate Requirements of this contract, and a facility which is dedicated to the construction of the building or work and is deemed part of the site of the work within the meaning of paragraph (2) of the "site of work" definition; and
5. Transportation of portions of the building or work between a secondary site where a significant portion of the building or work is constructed, which is part of the "site of the work" defined in paragraph (a)(1)(ii) of the FAR clause at 52.222-6, Construction Wage Rate Requirements, and the physical place or places where the building or work will remain (paragraph (a)(1)(i) of the FAR clause at 52.222-6, in the "site of the work" definition).

B. The Contractor shall insert in any subcontracts for construction, alterations and repairs within the United States the clauses entitled—

1. Construction Wage Rate Requirements;
2. Contract Work Hours and Safety Standards — Overtime Compensation (if the clause is included in this contract);
3. Apprentices and Trainees;
4. Payrolls and Basic Records;
5. Compliance with Copeland Act Requirements;
6. Withholding of Funds;
7. Subcontracts (Labor Standards);
8. Contract Termination—Debarment;
9. Disputes Concerning Labor Standards;
10. Compliance with Construction Wage Rate Requirements and Related Regulations; and
11. Certification of Eligibility.

C. The Prime Contractor shall be responsible for compliance by any subcontractor or lower tier subcontractor performing construction within the United States with all the contract clauses cited in paragraph (b).

D. (1) Within 14 days after award of the contract, the Contractor shall deliver to the Contracting Officer a completed Standard Form (SF) 1413, Statement and Acknowledgment, for each subcontract for construction within the United States, including the subcontractor's signed and dated acknowledgment that the clauses set forth in paragraph (b) of this clause have been included in the subcontract.

(2) Within 14 days after the award of any subsequently awarded subcontract the Contractor shall deliver to the Contracting Officer an updated completed SF 1413 for such additional subcontract.

E. The Contractor shall insert the substance of this clause, including this paragraph (e) in all subcontracts for construction within the United States.

76. Contract Termination—Debarment (FAR 52.222-12, May 2014)

A breach of the contract clauses entitled Construction Wage Rate Requirements, Contract Work Hours and Safety Standards Act—Overtime Compensation, Apprentices and Trainees, Payrolls and Basic Records, Compliance with Copeland Act Requirements, Subcontracts (Labor Standards), Compliance with Construction Wage Rate Requirements and Related Act Regulations, or Certification of Eligibility may be grounds for termination of the contract, and for debarment as a Contractor and subcontractor as provided in 29 CFR 5.12.

77. Compliance with Construction Wage Rate Requirements and Related Act Regulations (FAR 52.222-13, May 2014)

All rulings and interpretations of the Construction Wage Rate Requirements and related statutes contained in 29 CFR parts 1, 3, and 5 are hereby incorporated by reference in this contract.

78. Disputes Concerning Labor Standards (FAR 52.222-14, Feb 1988)

The United States Department of Labor has set forth in 29 CFR parts 5, 6, and 7 procedures for resolving disputes concerning labor standards requirements. Such disputes shall be resolved in accordance with those procedures and not the Disputes clause of this contract. Disputes within the meaning of this clause include disputes between the Contractor (or any of its subcontractors) and the contracting agency, the U.S. Department of Labor, or the employees or their representatives.

79. Notice of Labor Disputes (cl. 359 - Feb 1997)

If the Contractor has knowledge that any actual or potential labor dispute is delaying or threatens to delay the timely performance of this contract, the Contractor shall immediately give notice, including all relevant information, to the Battelle Contracts Representative.

80. Certification of Eligibility (FAR 52.222-15, May 2014)

A. By entering into this contract, the Contractor certifies that neither it (nor he or she) nor any person or firm who has an interest in the Contractor's firm is a person or firm ineligible to be awarded Government contracts by virtue of 40 U.S.C. 3144(b)(2) or 29 CFR 5.12(a)(1).

B. No part of this contract shall be subcontracted to any person or firm ineligible for award of a Government contract by virtue of 40. U.S. C. 3144[b](2] or 29 CFR 5.12(a)(1).

C. The penalty for making false statements is prescribed in the U.S. Criminal Code, 18 U.S.C. 1001.

81. Compliance with Contractor Code of Business Ethics and Conduct (FAR 52.203-13 Oct 2015)

The Contractor shall comply with the requirements of FAR

52.203-13 (Apr 2010), which are hereby incorporated by reference in this contract. This clause applies if the contract value exceeds $5,000,000 and the performance period is more than 120 days.

CLAUSES INCORPORATED BY REFERENCE

This Contract incorporates one or more FAR and DEAR provisions/clauses by reference with the same force and effect as if they were given in full text. Such provisions/clauses are identified below and elsewhere in this Contract by their title, effective date, and reference where they appear in the FAR and/or DEAR. The FAR and DEAR may be obtained from the Superintendent of Documents, US Government Printing Office and is available for viewing/downloading at http://www.acquisition.gov/far/ and http://farsite.hill.af.mil.

A. Applicable to all Contracts:

1. FAR 52.223-3, Hazardous Material Identification and Material Safety Data (JAN 1997) (Alt I, JUL 1995)
2. DEAR 952.211-71, Priorities and Allocations (APR 2008)
3. FAR 52.204-9 Personal Identity Verification of Contractor Personnel (JAN 2011)
4. FAR 52.227-4, Patent Indemnity—Construction Contracts (DEC 2007)
5. FAR 52.247-64, Preference For Privately Owned U.S.-Flag Commercial Vessels (FEB 2006)
6. DEAR 952.204-71 Sensitive Foreign Nations Control (MAR 2011) – *applies if contractor will make unclassified information about nuclear technology available to sensitive foreign nations.*
7. DEAR 952.217-70 Acquisition of Real Property (MAR 2011)
8. FAR 52.232-39 Unenforceability of Unauthorized Obligations (JUN 2013)
9. FAR 52.232-40 Providing Accelerated Payments to Small Business Subcontractors (DEC 2013)
10. FAR 52.204-25 Prohibition on Contracting for Certain Telecommunications and Video Surveillance Services and Equipment (AUG 2019)

B. Applicable to Subcontracts Under This Contract For Commercial Items:

1. FAR 52.244-6, Subcontracts For Commercial Items (JUN 2016)
2. FAR 52.223-15 Energy Efficiency in Energy-Consuming Products (DEC 2007)

C. Applicable if Contract identifies specific items to be accorded duty-free entry into a customs territory of the United States. Also applicable where other foreign supplies in excess of $15,000 may be imported to a customs territory of the United States.

1. FAR 52.225-8, Duty-Free Entry (OCT 2010)

D. Applicable if Contract exceeds $2,500:

1. FAR 52.225-9, Buy American Act—Construction Materials (MAY 2014)

   (Note: The fill-in for paragraph (b) (2) of this clause is "None.")

2. FAR 52.225-13, Restrictions on Certain Foreign Purchases (JUNE 2008)

E. Applicable if Contract Exceeds $3,500:

1. FAR 52.222-54, Employment Eligibility Verification (OCT 2015) – applies for (a) commercial or noncommercial services (except for commercial services that are part of the purchase of a COTS item (or an item that would be a COTS item, but for minor modifications), performed by the COTS provider, and are normally provided for that COTS item) and (b) construction services; only applies for work performed in the United States.
2. FAR 52.223-18 Encouraging Contractor Policies to Ban Text Messaging While Driving (AUG 2011)

F. Applicable if Contract exceeds $10,000:

1. FAR 52.222-21, Prohibition of Segregated Facilities (APR 2015)
2. FAR 52.222-23, Notice of Requirement for Affirmative Action to Ensure Equal Employment Opportunity for Construction (FEB 1999) (The term "Covered Area" referred to in this FAR clause includes the Missouri Counties of Clay, Platte, Jackson, Ray, and Cass; and the Kansas Counties of Wyandotte and Johnson. Goals for minority and female participation in each trade are 12.7% and 6.9%, respectively.)
3. FAR 52.222-26, Equal Opportunity (APR 2015) - The Equal Employment Opportunity Act Poster referenced in paragraph (c)(3) of the above clause may be downloaded from the U.S. Department of Labor website at www.dol.gov/elaws/posters.htm
4. FAR 52.222-27, Affirmative Action Compliance Requirements for Construction (FEB 1999)
5. FAR 52.222-29, Notification of Visa Denial (APR 2015) – *applies when the Equal Opportunity clause is used and when the work is required to be performed in a foreign country.*
6. FAR 52.222-40, Notification of Employee Rights Under the National Labor Relations Act (DEC 2010) – *applies if performance is wholly or partially in the United States.*

G. Applicable if Contract exceeds $15,000:

1. FAR 52.222-36, Equal Opportunity for Workers with Disabilities (JUL 2014)

H. Applicable if Contract exceeds $30,000:

1. FAR 52.204-10, Reporting Executive Compensation and First-Tier Subcontract Awards (Jul 2013) – *Contractor agrees to provide such information to Battelle or to maintain it for a period of not less than three years following contract completion and to provide it to the Government upon request.*

I. Applicable if Contract exceeds $35,000:

1. FAR 52.209-6, Protecting the Government's Interest When Subcontracting with Contractors

Debarred, Suspended, or Proposed for Debarment (Oct 2015)

J. Applicable if Contract exceeds $100,000 and its performance involves international air transportation of personnel, including their personal effects or property.

1. FAR 52.227-1, Authorization and Consent (DEC 2007) – applies without Alternate I if this Contract is for supplies or services, including construction, architect-engineer services, and materials, supplies, models, samples, and design or testing services.

2. FAR 52.247-63, Preference for U.S.-Flag Air Carriers (Feb 2006)

K. Applicable if Contract exceeds $150,000:

1. DEAR 970.5227-5, Notice and Assistance Regarding Patent and Copyright Infringement (AUG 2002)

1. FAR 52.203-7, Anti-Kickback Procedures, (May 2014) – excluding paragraph (c)(1)

2. FAR 52.222-35, Equal Opportunity for Veterans (JULY 2014)

3. FAR 52.222-37, Employment Reports on Veterans (FEB 2016)

L. Applicable if Contract exceeds $100,000 and its performance involves international air transportation of personnel, including their personal effects or property.

3. FAR 52.247-63, Preference for U.S.-Flag Air Carriers (JUN 2003)

M. Applicable if Contract exceeds $150,000 unless exempt per the provisions of FAR 22.305:

1. FAR 52.222-4, Contract Work Hours and Safety Standards Act--Overtime Compensation (MAY 2014)

N. Applicable if Contract exceeds $250,000:

1. FAR 52.203-6, Restrictions on Subcontractor Sales to the Government (SEP 2006)

2. FAR 52.203-17, Contractor Employee Whistleblower Rights and Requirement to Inform Employees of Whistleblower Rights (APR 2014)

3. FAR 52.219-8, Utilization of Small Business Concerns (OCT 2014)

O. Applicable if Contractor, as a part of its' quote or proposal, submitted the certification entitled "Certification of Toxic Chemical Release Reporting," and the amount of this Contract, inclusive of option amounts, exceeds $100,000:

1. FAR 52.223-14, Acquisition of EPEAT Registered Televisions (JUN 2014)

P. Applicable If Work Is Performed On DOE Site:

1. DEAR 952.203-70, Whistleblower Protection For Contractor Employees (DEC 2000)

2. DEAR 970.5223-1, Integration of Environment, Safety, and Health into Work Planning and Execution (DEC 2000)

3. DEAR 970.5223-4, Workplace Substance Abuse Programs at DOE Sites, (DEC 2010)

Q. Applicable if work is performed on DOE site or if Contractor or its Subcontractors have access to classified information:

1. DEAR 952.204-2, Security (Mar 2011)

2. DEAR 952.204-70, Classification/Declassification (SEP 1997)

3. DEAR 952.204-73, Facility Clearance (MAY 2002)

R. Applicable if this Contract exceeds $150,000 and is for advisory and assistance services as those terms are defined at FAR 37.201:

1. DEAR 952.209-72, Organizational Conflicts of Interest, Alt. I, (AUG 2009)

S. Applicable if this Contract exceeds $500,000:

1. FAR 52.222-50 Combating Trafficking in Persons (MAR 2015) including Alternate I. *Alternate I applies when work will be performed outside the U.S. and when specific U.S. directives or notices regarding combating trafficking in persons apply to contractor employees at the contract place of performance.*

2. DEAR 952.226-74 Displaced Employee Hiring Preference (JUN 1997)

3. DEAR 970.5226-2, Workforce Restructuring Under Section 3161 of the National Defense Authorization Act for Fiscal Year 1993 (DEC 2000)

T. Applicable if this Contract exceeds $700,000:

1. FAR 52.219-9, Small Business Subcontracting Plan (Oct 2015) – applies if the Contractor is a large business concern

U. Applicable to Contracts which require printing (as that term is defined in Title I of the U.S. Government Printing Regulations):

1. DEAR 970.5208-1, Printing (DEC 2000)

V. Applicable if this Contract involves the design, development, or operation of a system of records on individuals to accomplish a DOE function per the requirements of FAR 24.1:

1. FAR 52.224-1, Privacy Act Notification (APR 1984)

2. FAR 52.224-2, Privacy Act (APR 1984)

W. Applicable if Battelle requires a Certificate of Current Cost or Pricing Data in connection with the initial award or subsequent modification of this Contract pursuant to the requirements of FAR 15.403-1 through 15.403-5:

1. FAR 52.215-10, Price Reduction for Defective Cost or Pricing Data (AUG 2011)

2. FAR 52.215-11, Price Reduction for Defective Cost or Pricing Data—Modifications (AUG 2011)

3. FAR 52.215-12, Subcontractor Cost or Pricing Data (OCT 2010)

4. FAR 52.215-13, Subcontractor Cost or Pricing Data—Modifications (OCT 2010)

X. Applicable if costs incurred are a factor in determining the amount payable to Contractor under this Contract, or if the Contractor furnished Battelle a Certificate of Current Cost or Pricing Data as specified above:

1. DEAR 970.5232-3, Accounts, Records, and Inspection (DEC 2010)

Y. Applicable if Battelle furnishes Government property to the Contractor in the performance of this purchase order/Contract, including Contractor acquired property to which title vests in the government under this purchase order/Contract:

1. FAR 52.245-1, Government Property (AUG 2010)

Z. Applicable if royalties exceeding $250 were included in the price of this Contract:

1. DEAR 970.5227-8, Refund of Royalties (AUG 2002)

AA. Applicable if foreign travel is required in the performance of this Contract.

1. DEAR 952.247-70, Foreign Travel (JUN 2010)

BB. Applicable to all Contracts which include the design or operation of any plants or facilities or specially designed equipment for such plants or facilities.

1. DEAR 970.5227-1 Rights in Data – Facilities (DEC 2000) [included in Contracts for support services, involving the design or operation of any plants or facilities or specially designed equipment for such plants or facilities that are managed or operated under an M&O Contract under 48 CFR 970 with DOE.]

S804449-SPEC01-DIV01

3410 Chiller #5 Installation (S804449) and 3410 Chiller (air-cooled) Redundant CHW Pump Installation (S789008)

Construction General Requirements

Revision No. 0 Date: 02/2021

TABLE OF CONTENTS

Title Page i
Table of Contents ii

DIVISIONS	TOTAL PAGES
SECTION 011000 - SUMMARY OF WORK	**9**
SECTION 012000 - PAYMENT PROCEDURES	**2**
SECTION 013000 - ADMINISTRATIVE REQUIREMENTS	**9**
SECTION 013200 - CONSTRUCTION PROGRESS DOCUMENTATION	**6**
SECTION 014000 - QUALITY REQUIREMENTS	**6**
SECTION 015000 - TEMPORARY FACILTIES AND CONTROLS	**9**
SECTION 016000 - ENVIRONMENTAL, SAFETY AND HEALTH	**13**
SECTION 017000 - ENGINEERING, LAYOUT, AND INSTALLATION	**5**
SECTION 017310 - CUTTING AND PATCHING	**5**
SECTION 017320 - SELECTIVE DEMOLITION	**6**
SECTION 017600 - ENVIRONMENTAL PROTECTION AND WASTE MANAGEMENT	**8**
SECTION 017800 - COMPLETION, ACCEPTANCE AND CLOSEOUT	**7**
SECTION 017900 - VENDOR INFORMATION	**4**

SECTION 011000 - SUMMARY OF WORK

PART 1 - GENERAL

1.1 SUMMARY

A. The Work consists of two projects being constructed concurrently. The two projects are S804449 - 3410 Chiller #5 Installation and S789008 - 3410 Chiller (Air-cooled) Redundant CHW Pump Installation. The 3410 Central Utility Plant (CUP) is located in room 1706 of the 3410 building. The street address of the 3410 building is 622 Horn Rapids Road, Richland, WA.

B. The project scope for S804449 is to install a new Battelle-furnished 735-ton magnetic bearing chiller (3410-CHW-CH-005) in the 3410 CUP. Construction scope includes the preparation of the CUP to receive the chiller, procurement of associated equipment, installation of the chiller, pump(s), piping and valving needed to connect the chiller to the existing chilled water and condenser water piping in the CUP, the necessary electrical service and controls, startup and commissioning. Reference Drawing S804449-G0-001 for a list of project drawings. The chilled water pump (3410-CHW-PMP-004) and VFD, two electrical switchboards (3410-N-SWBD-003 and -004), transformer (3410-N-XFMR-006) and manual transfer switch (3410-N-DISC-001) are also Battelle-furnished.

C. The project scope of S789008 is to replace the existing heat exchanger and chilled water pump with a new heat exchanger, duplex pumps and variable frequency drives, and add a second set of chilled water pumps and variable frequency drives with associated piping modifications to hydraulically isolate the air-cooled chiller from the main plant chilled water system. Construction scope includes the preparation of the CUP to replace the heat exchanger, installation of the heat exchanger, pumps, piping and valving needed to connect the heat exchanger to the existing chilled water piping in the CUP, the necessary electrical service and controls, startup and commissioning. Reference Drawing S789008-G0-001 for a list of project drawings. The chilled water pumps (3410-CHW-PMP-201, -202, -203, -204) and associated VFDs, and the heat exchanger (3410-CHW-LHX-001) are Battelle-furnished.

1.2 CONTRACT(S)

A. Projects will be constructed under a general construction contract.

1.3 DRAWINGS

A. Drawings

1. S804449-G0-001 - Title Sheet
2. S804449-G0-002 – Specifications
3. S804449-G0-003 – Specifications

4. S804449-G0-004 – Specifications

5. S804449-G0-005 – Specifications

6. S804449-M1-101 – Plan

7. S804449-M6-101 – Schedules and Details

8. S804449-M7-101 - Controls

9. S804449-D1-101 – Demolition Plan

10. S804449-E1-101 – Installation Plan

11. S804449-E6-101 – One-Line Diagram

12. S789008-G0-001 – Title Sheet, Legend and Abbreviations

13. S789008-G0-002 – Specifications

14. S789008-G0-003 - Specifications

15. S789008-G0-004 - Specifications

16. S789008-D1-101 – Mechanical Demolition Plan

17. S789008-M1-101 – Piping Installation Plan

18. S789008-M6-101 – Equipment Schedules and Details

19. S789008-M7-101 – Controls and Sequence of Operation

20. S789008-E1-101 – Installation Plan, Details and One-Line Diagram

B. Specifications

1. This document and manufacturer specifications

C. Reference Drawings: None

D. Reference Data: None

1.4 GOVERNMENT-FURNISHED PRODUCTS

A. The following products are Government -furnished (also see 1.1 SUMMARY):

1. S804449 - Water cooled frictionless centrifugal chiller, Chilled water pump, Variable frequency drive

2. S804449 - Switchboards, Transformer, Manual transfer switch.

3. S789008 – (4) Variable frequency drives, (1) Heat Exchanger, 2 sets of Chilled water dual-arm pumps.

B. The Work includes providing support systems to receive Government's products and plumbing, mechanical, and electrical connections.
   1. Battelle will arrange and pay for delivery of Government-furnished items.
   2. After delivery, Battelle will inspect delivered items for damage.
   3. If Government-furnished items are damaged, defective, or missing, Battelle will arrange for replacement.
   4. Battelle will arrange for manufacturer's field services and for delivery of manufacturer's warranties to Contractor.
   5. Contractor is responsible for transferring Government-furnished items from storage area to the Project site.
   6. Contractor is responsible for protecting Government-furnished items from damage during storage and handling, including damage from exposure to the elements.
   7. If Government-furnished items are damaged as a result of Contractor's operations, Contractor shall repair or replace them.

1.5 MILESTONES

A. The Work shall be conducted in accordance with the following Milestones and shall be incorporated into the successful contractor's Construction Schedule as identified in 01 3200:

   1. Substantial Completion: 87 Calendar Days, or less, after Battelle issuance of Notice of Award (NOA), the Contractor shall be Substantially Complete with all work activities. Substantial Completion shall be as identified in Section 01 7800 – Completion, Acceptance and Closeout.

   2. Final Acceptance, Closeout of Exceptions. 101 Calendar Days, or less, after Battelle issuance of NOA, the Contractor shall attain Final Completion. Final Acceptance shall be as identified in Section 01 7800 Completion, Acceptance and Closeout.

B. The two scopes of work are being run concurrently.

1.6 WORK SEQUENCE

A. The Work shall be conducted in 3 phases.

   1. Phase One: The equipment will be installed, and all services routed to connection points.
   2. Phase Two: During an approved outage all final connections will be made.
   3. Phase Three: Startup & testing.

B. All service outages less than 13 hours including but not limited to electrical, ventilation, and fire protection shall be performed outside of normal business hours. Normal business hours are

defined as 6:00 a.m. to 5:00 p.m. Monday through Friday. The main electrical outage should be kept as short as possible.

1.7 USE OF PREMISES

A. Work hours shall be 6:00 a.m. to 4:30 p.m. Monday through Thursday. Authorization to access the facility or perform work on site at times other than as specified shall require prior written authorization.

B. All personnel performing work shall complete required PNNL training and possess a picture badge issued by PNNL or a Hanford Contractor. Doors shall not be left unlocked, unattended, or blocked open at any time. Doors that are alarmed or not customarily used require specific authorization for use and may require full time supervision by PNNL Security personnel while in use. Provide five (5) working notice to arrange for Security personnel. Provide five (5) working days notice for key and proximity badge access requests.

C. The 3410 building is an operational research facility. The Contractor shall take all necessary measures to limit the impact of construction and demolition activities on the occupants. Noise, dust, fumes, and vapors shall be controlled to the greatest extent practicable. Housekeeping shall be performed on an ongoing basis. Do not obstruct doorways and corridors.

D. Request authorization to access work areas, use storage and laydown areas, perform isolations, conduct outages, and perform work from the Construction Manager (CM). Request authorization before the end of shift for the following days access and work requirements. Approval is obtained the following morning through the Plan of the Day (POD) meeting. Request authorization a minimum of twenty-four (24) hours in advance for use of storage and laydown areas. Request authorization to perform isolations and conduct outages in writing a minimum of ten (10) working days in advance. Contractor shall submit a completed Isolation/Outage request permit form to the Battelle CM to request the isolation and/or outage necessary.

E. Weekly, or at the discretion of the Battelle Construction Manager, representatives of the Contractor and sub-tier contractors are required to attend a site coordination meeting with Battelle. Topics to be reviewed at the meetings will include safety, an overall progress review, coordination requirements, submittal status, Requests for Information (RFI), design changes and change orders.

1.8 PERMITS

A. Contractor Responsibility

1. The Contractors obligations regarding permits required by Federal, State, and Municipal Laws, Codes and Regulations remain as required by the Contract General Provisions and are not affected by this Section.

B. Permits

1. General.

a. Notify Battelle in advance of work requiring a permit. The Contractor shall meet the requirements set forth in the permit and post the permit in a conspicuous location and ensure employees' awareness of the permit contents.
b. In addition to permits identified in this Section, other sections may require use or approval of forms and requests that are not titled as permits but generally have the same effect. Contractor shall comply with the requirements identified with those forms and requests.

2. Class II Penetration Permit: Required for cutting, drilling, or otherwise penetrating solid material greater than 2 in. in depth, or penetrations through hollow structures where the absence of utilities or other hazards has not been positively determined. Notify Battelle five (5) days before the work is scheduled. Requirements for performing Class I and Class II blind penetrations are located in the Contractor Environmental Safety and Health Manual procedure titled Electrical Work Safety. Scanning of concrete slabs shall include 3D radar collection in addition to Ground Penetrating Radar (GPR), Electromagnetic Frequency (EMF), and Radio Frequency (RF) technologies.

3. Excavation Permit: Required for each excavation or backfilling involving hand digging greater than 12 inches, driving ground rods and stakes deeper than 12 inches, or machine digging at any depth. Hand digging is required within 5-ft of known or suspected underground utilities. Notify Battelle three (3) weeks before the permit is needed.

a. Additional to the Excavation Permit, the Contractor shall:

1) CALL BEFORE YOU DIG: Call 1-800-424-5555 for an underground utility scan prior to excavating. The actual location of underground utilities must be physically marked on the ground prior to start of any permit-required excavation.

2) SUBSURFACE SCAN: Conduct an Underground Utility Location Scan. Utilize Ground Penetrating Radar (GPR), Electromagnetic Frequency (EMF), and Radio Frequency (RF) technologies to identify subsurface infrastructure. Scan the excavation area in four (4) different directions in 2 steps. Scan step 1 incorporating 2 passes in a traditional checkerboard grid. Scan step 2 incorporating 2 additional passes in a 45-degree rotation, in relation to step 1. Scan all passes at 20 feet spacing (minimum) all directions**.** Provide field interpretation of data and marking of observed utilities utilizing spray paint and pin flags as appropriate.

3) EXCAVATION PLAN: Prepare Contractor Site Excavation Drawings incorporating all utilities identified within the contract documents, the final Contractor Underground Utility Location Scan report and the "Call Before You Dig" scan. Incorporate all information into a Project Excavation Plan that identifies all areas to be hand or machine excavated. All known or suspected utilities within the excavation area shall be potholed by hand physically verified the location and depth denoted on the Contractor Excavation Drawings.

4) EXCAVATION PLAN REVIEW: Submit the excavation Plan to the Construction Manager. Notify the Construction Manager one (1) week prior to submittal and allow for two (2) weeks for review and approval to excavate.

5) MAINTAIN EXCAVATION RECORD: As excavation and potholing activities proceed, maintain an accurate “as-built” version of the Contractor Site Excavation Drawing. Submit this excavation record prior to construction completion.

4. Hot Work Permit: Required for each location in which work involves welding, cutting, grinding, open flame soldering, spark generation or open flame. Notify Battelle three (3) days before the work is scheduled. Fire watch is required during all permitted activities and for a duration of **one hour** after completion.

5. Isolation/Outage Request Permit: Require for removing any Battelle system from service. Notify Battelle a minimum of ten (10) working days before isolation/outage is required.

1.9 WORK UNDER OTHER CONTRACTS - None

1.10 SPECIFICATION FORMATS AND CONVENTIONS

A. Specification Format: The Specifications are organized into Divisions and Sections using the 48 division CSI/CSC's "Master Format" numbering system.

B. Specification Content: The Specifications use certain conventions for the style of language and the intended meaning of certain terms, words, and phrases when used in particular situations. These conventions are as follows:

1. Abbreviated Language: Language used in the Specifications and other Contract Documents is abbreviated. Words and meanings shall be interpreted as appropriate. Words implied, but not stated, shall be inferred, as the sense requires. Singular words shall be interpreted as plural, and plural words shall be interpreted as singular where applicable as the context of the Contract Documents indicates.

2. Imperative mood and streamlined language: Are generally used in the Specifications. Requirements expressed in the imperative mood are to be performed by Contractor. Occasionally, the indicative or subjunctive mood may be used in the Section Text for clarity to describe responsibilities that must be fulfilled indirectly by Contractor or by others when so noted.

a. The words "shall," "shall be," or "shall comply with," depending on the context, are implied where a colon (:) is used within a sentence or phrase.

1.11 WORK CONTROL PROCESS

A. Work Control Policy: All construction work activities performed on the PNNL campus require a Job Safety Analysis (JSA). The JSA shall be completed by the Contractor for their anticipated Work tasks and submitted to Battelle for review and approval. The work control process identifies known hazards; outlines controls to mitigate the hazards, outlines expectations for hazard controls, as well as other activity specific work performance requirements. Battelle will assist in the identification and mitigation of hazards through the design documents, the Division 01 General Requirements, and participation in the preconstruction meeting, but the final responsibility of hazard identification and mitigation is the responsibility of the Contractor.

1. JSA: Contractor shall develop and submit for Battelle approval a JSA encompassing all Work Scope to be performed onsite. The JSA shall be developed in accordance with requirements identified in Section 01 6000 *Environmental, Safety and Health,* and the *Contractor Environmental Safety & Health* (CESH) manual.

2. Preconstruction Meeting: Prior to commencing onsite work, representatives from the Contractor's management, including the Jobsite Superintendent, Site Safety Supervisor, and sub-tier contractors shall meet with Battelle to evaluate hazards associated with the Work and establish the mitigation strategies for the identified hazards and address in the JSA.

3. Managing Change: The original, approved JSA shall be reviewed, revised, and re-approved by Battelle if the work scope, site conditions, or hazards change. Contractor shall verify that the JSA is current, addresses known hazards, and has been approved by Battelle.

1.12 TRAINING FOR CONTRACT PERSONEL

A. General: Include costs for course attendee's time in proposal. Battelle is responsible for initial and refresher training course fees. Contractor shall be required to pay course fees for no-shows and any retraining required as a result of failure. Classroom training will be conducted on Battelle premises unless otherwise noted.

B. COVID-19 and Non-staff Construction Sub-Contractor Orientation are required prior to obtaining a Battelle badge and prior to performing work at PNNL. Coordinate with the Construction Manager to schedule training.

1. Enhanced Safety Measure During COVID-19 (2929)
   Required recipients: All workers on job site
   Duration: 0.5 hours
   Scheduling: 3-5 working days
   Method: External or Battelle - Web Based
   Retrain Cycle: None

2. Non-Staff Construction Sub-Contractor Orientation (2856)
   Required recipients: All workers on job site
   Duration: 1 hour
   Scheduling: 3-5 working days
   Method: External or Battelle - Web Based
   Retrain Cycle: 1 year

C. Contractor personnel are required to have training appropriate to work to be performed. Submit documentation of previously completed courses to Battelle.

1. Lock & Tag for Authorized Staff Members (692)
   Required recipients: Workers potentially exposed to the release of hazardous energy that do not have current documented OSHA/WISHA Lock and Tag training.
   Duration: 8 hours
   Scheduling: 3-5 working days
   Method: Classroom Based
   Retrain Cycle: 2 years

2. Lock & Tag – PNNL Lockout/Tagout for Authorized Workers Practical OJT Training (2754)
   Required recipients: Authorized LOTO Workers who require the OJT Practical to remain current.
   Duration: 2 hours
   Scheduling: 3-5 working days
   Method: Classroom Based
   Retrain Cycle: None

3. Hot Work and Fire Watch (2504)
   Required recipients: Workers that will perform or monitor activities requiring generation of heat, sparks or open flame. All hot work shall be conducted in accordance with a Hot Work Permit.
   Duration: 1 hour
   Scheduling: 3-5 working days
   Method : Classroom Based
   Retrain Cycle: 2 years

4. Hands-on Fire Extinguisher Training (654)
   Required recipients: Workers performing fire watch activities.
   Training shall be documented.
   Duration: 1 hour
   Scheduling: External Instructor lead provided by performing Contractor
   Method: Classroom Based
   Retrain Cycle: 1 year

5. Asbestos Awareness Refresher (Course 1764)
   Required recipients: Required for performing non-abatement work near asbestos containing materials.
   Duration: 0.9 hour
   Scheduling: 3 working days
   Method : External or Battelle - Web Based
   Retrain Cycle: 2 years

6. Hazardous Waste Management Training (833)
   Required recipients: Contractor's designated environmental coordinator and alternate environmental coordinator for work that will generate hazardous waste
   Duration: 1 hour

Scheduling: 3 working days
Method : External or Battelle - Web Based
Retrain Cycle: None

7. DOT Hazmat Employee General Awareness, Safety and Security Awareness (676)
Required recipients: Contractor's staff who place waste materials in DOT specification packaging (e.g., ERDF boxes, drums, etc.)
Duration: 1.4 hours
Scheduling: 3 working days
Method: External or Battelle – Web Based
Retrain Cycle: 3 years

8. PNWD Electrical Safety Core Training (Course 1014)
Required recipients: Workers performing activities covered by an Electrical Work Permit
Duration: 3.5 hours
Scheduling: 3-5 working days
Method : Classroom Based
Retrain Cycle: 3 years

9. Integrated Operations System
Required recipients: Varies by work area.
Duration: Varies by work area.
Scheduling: 3 working days
Method : Read and sign.
Retrain Cycle: As required

PSF Facility Specific Training

1. PSF 3410/MS&T Orientation (1997)
Required recipients: For all workers entering the 3410 building.
Duration: 0.3 hour
Scheduling: 3-5 working days
Method : Battelle Computer Based
Retrain Cycle: None

PART 2 - PRODUCTS – not used

PART 3 - EXECUTION – not used

END OF SECTION 011000

SECTION 012000

PAYMENT PROCEDURES

PART 1 - GENERAL

1.1 SUMMARY

A. Reference Contract General Provisions for additional instruction.

1.2 SUBMITTALS

A. Schedule of Values: Submit for approval no later than fourteen (14) calendar days after Notice of Award one (1) copy of the Schedule of Values allocating portions of the Contract sum to various portions of the Work. Upon approval by Battelle, the Schedule of Values shall be used as the basis for reviewing Contractor Applications for Payment. No invoice will be accepted prior to Battelle approval of the Schedule of Values.

1. Each item in the Schedule of Values shall be clearly identified as applicable to Contract line items. Level of effort activities if used shall also be separated into portions applicable to Line Item Number 1 or Line Item Number 2.
2. Coordinate submittal with the Construction Schedule required per 013200. Correlate items in the Schedule of Values directly with tasks enumerated in the Construction Schedule.
3. The Schedule of Values shall provide a breakdown of the Contract Sum in sufficient detail to facilitate continued evaluation of Applications for Payment and progress reports.
4. Round amounts to nearest whole dollar. The total shall equal the Contract Sum.
5. When previously authorized in writing provide a separate line item in the Schedule of Values for each part of the Work where Applications for Payment may include materials or equipment purchased or fabricated and stored on site.
6. Include the following Project and Contract identification on the Schedule of Values:
   a. Project name
   b. Battelle Contract number
   c. Submittal number
   d. Contractor's name and address.
   e. Date of submittal

B. Revised Schedule of Values: Update and resubmit one (1) copy of the Schedule of Values when Change Orders or Change Directives result in a change in the Contract Sum. Revise and resubmit one (1) copy of the Schedule of Values when, at the discretion of Battelle, it is determined that the Schedule of Values does not approximate the actual value of Work.

1.3 PROGRESS VERIFICATION

1. Meet with the Battelle Construction Manager and, utilizing the approved Schedule of Values, verify and agree upon the percentage of work complete for each activity.
2. Applications for Payment shall reflect the agreed upon percentages of work completed.
3. No invoice will be accepted without prior Construction Manager verification and approval.

END OF SECTION 012000

SECTION 013000

ADMINISTRATIVE REQUIREMENTS

PART 1 - GENERAL

1.1 SUMMARY

A. This Section includes administrative and procedural requirements:

1. Submittals
2. Product delivery, storage, and handling.
3. Product Substitutions and Comparable products.
4. Requests for Information (RFI)

1.2 DEFINITIONS

A. Products: Items purchased for incorporating into the Work, whether purchased for Project or taken from previously purchased stock. The term "product" includes the terms "material," "equipment," "system," and terms of similar intent.

1. Named Products: Items identified by manufacturer's product name, including make or model number or other designation, shown or listed in manufacturer's published product literature, that is current as of date of the Contract Documents.
2. New Products: Items that have not previously been incorporated into another project or facility, except that products consisting of recycled-content materials are allowed, unless explicitly stated otherwise. Products salvaged or recycled from other projects are not considered new products.
3. Comparable Product: Product that is demonstrated and approved through submittal process, or where indicated as a product substitution, to have the indicated qualities related to type, function, dimension, in-service performance, physical properties, appearance, and other characteristics that equal or exceed those of specified product.

B. Substitutions: Changes in products, materials, equipment, and methods of construction from those required by the Contract Documents and proposed by Contractor.

C. Approval Submittals: Written and graphic information that requires Battelle’s approval responsive action.

D. Informational Submittals: Written information that does not require Battelle’s approval. Informational Submittals may be rejected for not complying with requirements.

E. Request for Information (RFI): An RFI is a written documented administrative method by which the Contractor can request clarification and/or direction from Battelle on Contract

requirements. An RFI is not a change document, therefore, the contractor is not authorized to make or infer changes to the Contract Work based on a Battelle response to an RFI.

1.3 SUBMITTALS

A. Coordination: Coordinate preparation and processing of submittals with performance of construction activities.

1. Coordinate each submittal with fabrication, purchasing, testing, delivery, other submittals, and related activities that requires sequential activity.
2. Coordinate transmittal of different types of submittals for related parts of the Work so processing will not be delayed because of need to review submittals concurrently for coordination.

    1. Battelle reserves the right to withhold action on a submittal requiring coordination with other submittals until related submittals are received.

B. Submittal Schedule: A submittal schedule identifying required submittals will be provided.

1. This schedule is provided as a convenience to the Contractor.
2. The omission of an item from the submittal schedule does not relieve the Contractor from the responsibility of submitting an item listed in the individual specification sections.
3. The submittal schedule shall be updated by the Contractor to show critical submittal and review dates, and submitted for approval with the project schedule.

C. Processing Time: Allow enough time for submittal review, including time for re-submittals, as follows. Time for review shall commence on Battelle's receipt of submittal.

1. Initial Review: Allow 10 working days for initial review of each submittal. Allow additional time if processing must be delayed to permit coordination with subsequent submittals. Battelle will advise Contractor when a submittal being processed must be delayed for coordination.
2. Re-submittal Review: Allow 5 working days for processing each re-submittal.
3. Lack of Timely Submittal: No extension of the Contract Time will be authorized because of failure to transmit submittals enough in advance of the Work to permit processing.

D. Identification: Place a permanent label or title block on each submittal for identification.

1. Indicate name of firm or entity that prepared each submittal on label or title block.
2. Provide a space approximately 4 by 5 inches on label or beside title block to record Contractor's review and approval markings and action taken by Battelle.
3. Include the following information on label for processing and recording action taken:

    1. Project name.
    2. Date.
    3. Name and address of Contractor.
    4. Name and address of subcontractor.
    5. Name and address of supplier.

6. Name of manufacturer.
7. Submittal number, including revision number, as identified on the Submittal Schedule.
8. Number and title of appropriate Specification Section or drawing number.

E. Transmittal: Transmit each submittal using the electronic Project Management software submittal process provided by Battelle. Battelle will return submittals, without review, received from sources other than Contractor.

1. On an attached separate sheet, prepared on Contractor's letterhead, record relevant information, requests for data, revisions other than those requested by Battelle on previous submittals, and deviations from requirements of the Contract Documents, including minor variations and limitations. Include the same label information as the related submittal.
2. Include Contractor's certification stating that information submitted complies with requirements of the Contract Documents.

F. Deviations: Highlight, encircle, or otherwise identify deviations from the Contract Documents on submittals.

G. Product Data Submittals: Include Specification Section number and title and Drawing numbers and titles.

1. Product data submittals shall include performance, electrical, dimensional, accessories, make and model number for the equipment at a minimum. Enough information must be provided to determine the appropriateness, fit and function of the equipment within the system.

2. Manufacturers' Data Sheets: Where product data contain manufacturers' standard data, include only sheets pertinent to product or component installed. Mark each sheet to identify each product or component incorporated into the Work. If data include more than one item in a tabular format, identify each item using appropriate references from the Contract Documents. Identify data applicable to the Work and delete references to information not applicable.

H. Substitution Requests: Submit using the Project Management software system. Identify product or fabrication or installation method to be replaced. Include Specification Section number and title and Drawing numbers and titles.

1. Documentation: Show compliance with requirements for substitutions and the following, as applicable:

1. Statement indicating why specified material or product can not be provided.
2. Coordination information, including a list of changes or modifications needed to other parts of the Work and to construction performed by Battelle and separate contractors that will be necessary to accommodate proposed substitution.
3. Detailed comparison of significant qualities of proposed substitution with those of the Work specified. Significant qualities may include attributes such as

performance, weight, size, durability, visual effect, and specific features and requirements indicated.

4. Product Data, including drawings and descriptions of products and fabrication and installation procedures.
5. Samples, where applicable or requested.
6. List of similar installations for completed projects with project names and addresses and names and addresses of owners and architects.
7. Material test reports from a qualified testing agency indicating and interpreting test results for compliance with requirements indicated.
8. Research/evaluation reports evidencing compliance with building code in effect for Project, from a model code organization acceptable to authorities having jurisdiction.
9. Detailed comparison of Contractor's Construction Schedule using proposed substitution with products specified for the Work, including effect on the overall Contract Time. If specified product or method of construction cannot be provided within the Contract Time, include letter from manufacturer, on manufacturer's letterhead, stating lack of availability or delays in delivery.
10. Cost information, including a proposal of change, if any, in the Contract Sum.
11. Contractor's certification that proposed substitution complies with requirements in the Contract Documents and is appropriate for applications indicated.
12. Contractor's waiver of rights to additional payment or time that may subsequently become necessary because of failure of proposed substitution to produce indicated results.

2. Battelle Review: Battelle will make every attempt to expedite review of a substitution requests, however, Contractor shall allow 10 days for disposition. If necessary, Battelle will request additional information or documentation for evaluation within one week of receipt of a request for substitution.

    1. If no decision on use of a proposed substitution is made within the time allocated, the Contractor is obligated to use the product specified and shall hold Battelle harmless for any impact to the Construction Schedule, and shall further be held responsible for completing all Work within the approved period of performance.
    2. Any acceptance of a Contractors request for substitution shall be documented on a formal written Change Order.

I. Compatibility of Options: If Contractor is given option of selecting between two or more products for use on Project, product selected shall be compatible with products previously selected, even if previously selected products were also options.

    1. Each contractor is responsible for providing products and construction methods compatible with products and construction methods of other contractors.
    2. If a dispute arises between contractors over concurrently selectable but incompatible products, Battelle will determine which products shall be used.

J. Distribution: Furnish copies of final submittals to manufacturers, subcontractors, suppliers, fabricators, and installers, and others as necessary for performance of construction activities. Show distribution on transmittal forms. Reference Section 01400.

K. Use for Construction: Use only final submittals with mark indicating action taken by Battelle in connection with construction.

1. Contractor shall maintain copies of latest submitted and dispositioned submittals at the Worksite and available for Battelle review at all times.

1.4 PRODUCT DELIVERY, STORAGE, AND HANDLING

A. Deliver, store, and handle products using means and methods that will prevent damage, deterioration, and loss, including theft. Comply with the manufacturers written instructions.

1. Schedule delivery to minimize long-term storage at Project site and to prevent overcrowding of construction spaces.
2. Coordinate delivery with installation time to ensure minimum holding time for items that are flammable, hazardous, easily damaged, or sensitive to deterioration, theft, and other losses.
3. Deliver products to Project site in an undamaged condition in manufacturer's original sealed container or other packaging system, complete with labels and instructions for handling, storing, unpacking, protecting, and installing.
4. Inspect products on delivery to ensure compliance with the Contract Documents and to ensure that products are undamaged and properly protected. Reference Section 01400.
5. Store products to allow for inspection and measurement of quantity or counting of units.
6. Store products that are subject to damage by the elements, under cover in a weather tight enclosure above ground, with ventilation adequate to prevent condensation.

B. Storage: Provide a secure location and enclosure at Project site for storage of materials and equipment. Coordinate location with Battelle.

PART 2 - PRODUCTS

2.1 PRODUCT OPTIONS

A. General Product Requirements: Provide products that comply with the Contract Documents, that are undamaged, and unless otherwise indicated, that are new products at time of installation.

1. Provide products complete with accessories, trim, finish, fasteners, and other items needed for a complete installation and indicated use and effect.
2. Standard Products: If available, and unless custom products or nonstandard options are specified, provide standard products of types that have been produced and used successfully in similar situations on other projects.
3. Descriptive, performance, and reference standard requirements in the Specifications establish "salient characteristics" of products.
4. Or Equal: Where products are specified by name and accompanied by the term "or equal" or "or approved equal" or "or approved," the Contractor shall comply with

provisions in "Comparable Products" Article to obtain approval for use of an unnamed product.

B. Product Selection Procedures: Procedures for product selection include the following:

1. Available Products: Where Specification paragraphs or subparagraphs titled "Available Products" introduce a list of names of both products and manufacturers, provide one of the products listed or another product that complies with requirements. Comply with provisions in "Comparable Products" Article to obtain approval for use of an unnamed product.
2. Available Manufacturers: Where Specification paragraphs or subparagraphs titled "Available Manufacturers" introduce a list of manufacturers' names, provide a product by one of the manufacturers listed or another manufacturer that complies with requirements. Comply with provisions in "Comparable Products" Article to obtain approval for use of an unnamed product.
3. Product Options: Where Specification paragraphs titled "Product Options" indicate that size, profiles, and dimensional requirements on Drawings are based on a specific product or system, provide either the specific product or system indicated or a comparable product or system by another manufacturer. Comply with provisions in "Product Substitutions" Article.
4. Visual Matching Specification: Where Specifications require matching an established Sample, select a product (and manufacturer) that complies with requirements and matches Battelle's sample. Battelle's decision will be final on whether a proposed product matches satisfactorily.

    1. If no product available within specified category matches satisfactorily and complies with other specified requirements, comply with provisions of the Contract Documents on "substitutions" for selection of a matching product.

5. Visual Selection Specification: Where Specifications include the phrase "as selected from manufacturer's colors, patterns, textures" or a similar phrase, select a product (and manufacturer) that complies with other specified requirements.

    1. Standard Range: Where Specifications include the phrase "standard range of colors, patterns, textures" or similar phrase, Battelle will select color, pattern, or texture from manufacturer's product line that does not include premium items.
    2. Full Range: Where Specifications include the phrase "full range of colors, patterns, textures" or similar phrase, Battelle will select color, pattern, or texture from manufacturer's product line that includes both standard and premium items.

2.2 PRODUCT SUBSTITUTIONS

A. Timing: Contractor shall time the submission of substitution requests so as not to impact the Construction Schedule or the Contract period of performance.

B. Conditions: Battelle will only consider product substitutions under the following described conditions:

1. Requested substitution offers Battelle a substantial advantage in cost, time, energy conservation, or other considerations, after deducting additional responsibilities Battelle must assume. Battelle's additional responsibilities may include cost of redesign and evaluation, increased cost of other construction by Battelle, and similar considerations.
2. Requested substitution does not require extensive revisions to the Contract Documents.
3. Requested substitution is consistent with the Contract Documents and will produce indicated results.
4. Substitution request is fully documented and properly submitted.
5. Requested substitution will not adversely affect Contractor's Construction Schedule.
6. Requested substitution has received necessary approvals of authorities having jurisdiction.
7. Requested substitution is compatible with other portions of the Work and has been coordinated with other portions of the Work.
8. Requested substitution provides specified warranty.
9. If requested substitution involves more than one contractor, requested substitution has been coordinated with other portions of the Work, is uniform and consistent, is compatible with other products, and is acceptable to all contractors involved.

2.3 COMPARABLE PRODUCTS

A. Where products or manufacturers are specified by name, submit the following, in addition to other required submittals, to obtain approval of an unnamed product:

1. Evidence that the proposed product does not require extensive revisions to the Contract Documents, that it is consistent with the Contract Documents and will produce the indicated results, and that it is compatible with other portions of the Work.
2. Detailed comparison of significant qualities of proposed product with those named in the Specifications. Significant qualities include attributes such as performance, weight, size, durability, visual effect, and specific features and requirements indicated.
3. Evidence that proposed product provides specified warranty.
4. List of similar installations for completed projects with project names and addresses and names and addresses of owners and architects, if requested.
5. Samples, if requested.

PART 3 - EXECUTION

3.1 SUBMITTALS

A. Submittals: Only submit **complete** document sets incorporating all information required by the specification sections for each of the following disciplines; Civil, Mechanical, Electrical. Incomplete submittals will be rejected.

1. Submittal format:
    1. Product Submittals: include table of contents of all items submitted organized by specification section; assemble submittal by discipline into a single PDF document.

2. Shop Drawings: Provide a minimum of 15 calendar days prior to starting fabrication or installation of work. Do not fabricate or install work until shop drawings are approved by PNNL Engineering. Include complete location dimensions, equipment dimensions and arrangement, installation details, material callouts, and access and service orientation and clearance, and other information as called out in the applicable specification section.
3. Approval: approval of submittals or shop drawings does not relieve the Contractor of the responsibility for complying with the Contract documents, all of which have precedence over the submittals. Changes to the Contract documents as a result of the submittals shall be processed via ECN and/or Contract Modification prior to integration of the change.
4. Test Reports and Certificates Submittals: submit within 20 days of field acceptance or receipt from the applicable agency.
5. Other Report Submittals: comply with the requirements of the specification section.
6. O&M Submittals: submit a complete O&M PDF document with product submittal data, installation instructions, operation and maintenance information, start-up instructions, and spare parts lists and other data listed in the specification sections. Include names, addresses, telephone numbers of manufacturers and vendors of materials and equipment, test reports, warranty data and certificates.

2. Exceptions to the requirements of paragraph 1:

1. Discipline submittals may be divided into subcontractor packages; e.g. Mechanical may be divided into separate submittals meeting the above requirements for Plumbing, Wet-side HVAC, Dry-side HVAC, Fire Sprinkler, etc.
2. Subject to prior approval by PNNL, the contractor may submit without certain elements of the product data to meet project schedule. When approved the missing submittal elements shall be clearly identified and include the justification for providing the incomplete submittal.
3. Resubmit the complete document set for disposition prior to Final Completion.

B. Battelle Review

1. Battelle will review each submittal and indicate corrections or modifications required.

1. No Exception Taken: Battelle has not found anything within the submittal that requires rework to the submittal.
2. Exception Taken as Noted: No Re-submittal Required: Battelle has found and marked up discrepancies within the submittal. Contractor shall make corrections as noted but is not required to resubmit the package to Battelle.
3. Exception Taken as Noted - Resubmittal Required: Battelle has found and marked up discrepancies within the submittal, contractor shall make corrections as noted and resubmit the package to Battelle.
4. Reject – Revise and Resubmit: Submittal is rejected in its entirety or has not been transmitted per these specifications; contractor shall remedy the discrepancy and resubmit the entire package.

2. Unsolicited Submittals: Submittals not required by the Contract Documents are reviewed at Battelle's sole discretion and may not be reviewed and may be discarded.

3.2 REQUESTS FOR INFORMATION (RFI)

A. RFI Process: Submit RFIs using the Project Management software system.

1. RFI Submittal: All RFIs shall be submitted by the Contractor, in writing, in clear concise language, and in sufficient detail to fully describe the issue. RFIs from sub-tier contractors shall be reviewed by the Contractor, and if appropriate, submitted by the Contractor in accordance with this specification.
2. Required Information: The following items shall be required on the RFI Form.

    1. Project Name
    2. Contract Number
    3. Date
    4. RFI Number: Contractor shall sequentially number each RFI and maintain a system sufficient to ensure that duplicate numbers or gaps shall not occur.
    5. Contractor Name
    6. To: Identify the name of the Battelle Technical Representative identified in the Contract Agreement.
    7. Subject: A brief description of the issue.
    8. References: As detailed on the RFI form and to the level required to fully identify the issue. (RFIs which lack sufficient detail or clarity to identify the issue, shall be returned to the Contractor for correction)
    9. Problem/Information Requested: A complete narrative on the problem or information requested.
    10. Information Requested By: The name of the requestor or entity
    11. Reply Needed Date: The date that reply is needed to maintain schedule and not disrupt construction. Reply Needed Date shall comply with section 3.2.B.4 of this specification

3. Optional Information: Contractor may provide a statement of interpretation or proposed resolution in the space provided on the RFI form.

4. Request For Information Review Time: Battelle shall review properly submitted RFIs and return them, with an answer, within 10 days of receipt. Where conditions warrant, the Contractor may request expedited review. Failure of Battelle to fulfill Contractors request for expedited review shall not justify any extension of time to the Contractor.

END OF SECTION 013000

SECTION 013200

CONSTRUCTION PROGRESS DOCUMENTATION

PART 1 – GENERAL

1.1 SUMMARY

A. This section contains administrative and procedural requirements for construction progress documentation.

1.2 DEFINITIONS

A. Activity: A discrete part of a project that can be identified for planning, scheduling, monitoring, and controlling the construction project. Activities included in a construction schedule consume time and resources.

1. Critical activities are activities on the critical path. They must start and finish on the planned early start and finish times.
2. Predecessor activity is an activity that must be completed before a given activity can be started.

B. CPM: Critical path method, which is a method of planning and scheduling a construction project where activities are arranged based on activity relationships. Network calculations determine when activities can be performed and the critical path of Project.

C. Critical Path: The longest continuous chain of activities through the network schedule that establishes the minimum overall Project duration and contains no float.

D. Event: The starting or ending point of an activity.

E. Float: The measure of leeway in starting and completing an activity.

1. Free float is the amount of time an activity can be delayed without adversely affecting the early start of the following activity.
2. Total float is the measure of leeway in starting or completing an activity without adversely affecting the planned Project completion date.

F. Fragnet: A partial or fragmentary network that breaks down activities into smaller activities for greater detail.

G. Major Work Elements: Significant construction elements which identify each major portion of the work scope. When taken together, the major work elements completely define the scope of the project. Depending on the complexity of the project, these elements may be defined and

depicted in a hierarchical format. Activities are organized in accordance with the major work elements.

H. Milestone: A key or critical point in time for reference or measurement.

I. Percent Complete: The measure of physical progress on an activity or task.

J. Resource: A definable labor entity, material commodity, or subcontract service with a corresponding measurement for each activity.

1.3 SUBMITTALS

A. Startup Schedule: Fourteen (14) calendar days after Notice of Award submit a schedule covering the first 60 calendar days of the Contract, starting with receipt of Notice to Proceed.

B. Construction Schedule: Thirty (30) calendar days after Notice of Award submit the Construction Schedule for the entire construction period.

C. Reports

a. Updated CPM Schedule: (at monthly intervals)
b. Daily Construction Reports: (at weekly intervals)
c. Manpower Reports: (at monthly intervals)
d. Two Week Look Ahead Schedules: (at bi-weekly intervals).

PART 2 - PRODUCTS

2.1 Prepare schedules using commercial project planning software. The preferred software (used by Battelle) is Oracle's Primavera P6 Enterprise Project Portfolio Manager. Other Project planning software may be used.

PART 3 - EXECUTION

3.1 SCHEDULE PREPARATION

A. Prepare Startup and Construction schedule contents in accordance with the following:

1. Schedule format shall be a detailed, integrated, cost and resource loaded, Critical Path Method time-scaled logic diagram (time scaled activity bars and constraints), with a supporting tabulation of activities. As a minimum, activity bars, activity descriptions and numbers, constraints, milestones and critical path shall be shown on the diagram.
2. Activity durations shall be in working days. Typically, activity durations shall not exceed 20 days, with exception of level-of-effort activities. Activity titles shall be self-explanatory, with abbreviations shown in a legend on the document. Identify early start, late finish, restraining activities, total float, and critical path.

3. Submittal Review Time: Include allowance for review and re-submittal times of Contract required data. Coordinate submittal review times in Contractor's Construction Schedule with Submittals Schedule.
4. Activity description logic sequence and relationship. Schedules shall identify critical path activities, including logical sequence and relationship of activities for engineering, design, submittals, procurement, fabrication, delivery, erection, installation, and testing of work covered by Contract. Level of detail is at discretion of Battelle.

    a. Include procurement process activities for long lead items and major items, requiring a cycle of more than 60 days, as separate activities in schedule. Procurement cycle activities include, but are not limited to, submittals, approvals, purchasing, fabrication, and delivery.

    b. Constraints: Include constraints and work restrictions indicated in the Contract Documents and as follows, and show how the sequence of the Work is affected.

        1) Arrange list of activities on schedule by major work element.
        2) Include a separate activity for each portion of the Work performed by Battelle.
        3) Include a separate activity for each long lead or critical delivery.
        4) Include a separate activity for each product, include delivery dates; stipulate the earliest possible delivery date.
        5) Show the effect of Work Restrictions on the schedule.

    c. Major Work Elements: Identify each major portion of work required for construction. Indicate where each construction activity within a major element must be sequenced or integrated with other construction activities to provide for the following:

        1) Sitework
        2) Utility Tie-In
        3) Completion of mechanical installation.
        4) Completion of electrical installation.
        5) Start-up
        6) Testing and Balancing
        7) Substantial Completion.
        8) Commissioning

    d. Work Stages: Indicate important stages of construction within each major work element, but not limited to, the following:

        1) Subcontract awards.
        2) Mobilization
        3) Submittals.
        4) Purchases.
        5) Mockups.
        6) Fabrication.
        7) Sample testing.
        8) Deliveries.

9) Installation.
10) Tests and inspections.
11) Commissioning
12) Punch list

e. Milestones: Include milestones indicated in the Contract Documents in schedule, including, but not limited to, Notice of Award (Award), Notice to Proceed (NTP), Contract Milestones, Substantial Completion, and Final Completion.

3.2 SCHEDULE MAINTENANCE

A. Requests for Equitable Schedule Adjustment: For each change request where an equitable adjustment to the schedule is requested include a critical path analysis, using both forward and backward calculations, that clearly demonstrates that the requested adjustment is both critical and non-concurrent. The Contractor shall not incorporate a proposed schedule adjustment into Look Ahead and project progress update schedules provided to Battelle prior to change request negotiation and approval.

B. Schedule Updating: At monthly intervals, a review of job progress shall take place between the Contractor and designated Battelle representatives to determine actual progress. Participants shall compare actual job progress with scheduled progress. The parties shall negotiate percent complete for each applicable activity.

1. Update shall reflect agreed to actual quantities of materials installed, actual labor hours, and deliverables furnished. Contractor shall issue the update in alignment with Battelle's financial processing calendar. The Contractor's monthly Application for Payment shall be consistent with the information presented in the updated schedule.
2. Revise schedule immediately after each meeting or other activity where revisions have been recognized or made. Contractor shall issue updated schedule(s) concurrently with the report of each such meeting.

3.3 REPORTS

A. Monthly CPM Schedule Update: The contractor shall prepare and submit with its monthly billing or accrual submittal an updated CPM schedule that reflects the physical progress and current start and finish dates of each scheduled activity. The schedule shall compare the progress to date to the approved baseline, including the effect of any delays and changes.

1. The schedule shall include the following information:
   a. Activity ID
   b. Activity Description
   c. Early Start
   d. Early Finish
   e. Baseline Start
   f. Baseline Finish
   g. % Complete
   h. Total Float

i. Budgeted Cost
2. Highlight critical path activities.
3. Completed activities may be omitted.
4. Include a predecessor / successor listing.
5. Battelle may require that the schedule be provided electronically in a format compatible with the schedule software being utilized.

B. Daily Construction Reports: Prepare a daily construction report recording the following information concerning events at Project site:

1. List of subcontractors at Project site.
2. List of separate contractors at Project site.
3. Approximate count of personnel at Project site.
4. High and low temperatures and general weather conditions.
5. Accidents.
6. Meetings and significant decisions.
7. Unusual events.
8. Stoppages, delays, shortages, and losses.
9. Change Orders received and implemented.
10. Equipment or system tests and startups.
11. Partial Completions and occupancies.
12. Substantial Completions authorized.

C. Manpower Report. The Contractor shall report all hours worked on-site on a monthly basis. The report shall itemize labor hours by contractor direct report employee and subcontractor employee. No distinction shall be made between Straight time and Overtime hours or the job classification of the employee.

D. Two Week Look Ahead. The Contractor shall prepare and submit on a bi-weekly basis a two week schedule that looks at the upcoming two weeks in the Construction Schedule on a detailed level that forecasts daily planning of the work, and outages and interfaces with existing utilities, systems, services, and building personnel.

3.4 CONSTRUCTION PHOTOGRAPHS

A. Date Stamp: Unless otherwise indicated, date and time stamp each photograph as it is being taken so stamp is integral to photograph.

B. Pre-construction Photographs: Before starting construction, take photographs of Project site and surrounding properties from different vantage points. Show existing conditions adjacent to property.

C. Periodic Construction Photographs: Take photographs monthly, coinciding with cutoff date associated with each Application for Payment. Photographer shall select vantage points to best show status of construction and progress since last photographs were taken.

D. Final Completion Construction Photographs: Take photographs after date of Substantial Completion for submission as Project Record Documents.

END OF SECTION 013200

SECTION 014000

QUALITY REQUIREMENTS

PART 1 - GENERAL

1.1 SUMMARY

A. This Section includes administrative and procedural requirements for implementation of Contract specific quality assurance (QA) and quality control (QC) requirements.

1.2 DEFINITIONS

A. Quality Assurance: Associated documented program/procedures and resultant activities, actions, and performance during the execution of the Contract to provide confidence that quality is achieved. Quality is a condition that is achieved when items, services or processes meets or exceeds Contract requirements.

B. Quality Control (Examination and Testing): Associated documented examinations, test activities, actions, and performance during the execution of the Contract to evaluate that ongoing and completed construction complies with requirements. This does not include verification for Contract acceptance performed by Battelle or other Battelle Contracted parties.

C. Testing Agency: An entity engaged by Contractor and/or Battelle to perform specific inspections, examinations, or tests. Testing laboratory shall mean the same as testing agency.

D. Qualifications:

1. Fabricator Qualifications: A firm experienced in producing products similar to those indicated for this Contract work scope and with a record of successful in-service performance, as well as sufficient production capacity.
2. Factory-Authorized Service Representative Qualifications: An authorized representative of manufacturer who is trained and approved by manufacturer to install, examine, test or calibrate manufacturer’s products that are similar in material, design, and extent to those indicated for this Contract.
3. Installer Qualifications: A firm or individual experienced in installing, erecting, or assembling work similar in material, design, and extent to that indicated for this Contract, whose work has resulted in construction with a record of successful in-service performance.
4. Manufacturer's Field Services: A factory-authorized service representative to examine field-assembled components and equipment installation, including service connections.
5. Manufacturer Qualifications: A firm experienced in manufacturing products or systems similar to those indicated for this Contract and with a record of successful in-service performance.
6. Testing Agency Qualifications: An agency with the experience, capability and as applicable certification to conduct testing and inspecting indicated and that specializes in types of tests and inspections to be performed.

1.3 SUBMITTALS

A. Quality Assurance Program (QAP): Submit for approval the QAP utilized during execution of Contract work. QAP shall also be submitted with bid proposal.

B. Schedule of Contractor Performed Examinations and Tests: Prepare in tabular form and submit prior to performing Contract work. The table shall include the following:

1. Source design document number, title, and section.
2. Description of examining and tests.
3. Identification of applicable standards.
4. Identification of examination and test methods.
5. Qualification and as applicable certification requirements for performing personnel.
6. Number of examinations and tests required.
7. Requirements for obtaining samples.
8. Any unique characteristics of each quality control service.
9. Examples of documentation forms to substantiate inspections and tests (see specification 014000 Section 1.3.D).

C. Examination and Test Report Documentation: As identified in other portions of the Specification submit one (1) copy upon completion of examinations and tests and no later than the date of Substantial Completion. All examination and test reports shall be legible, reproducible, and contain the following information:

1. Date of examination or test.
2. Contract number.
3. Examination or testing agency.
4. Location(s) of examinations and tests.
5. Source design document number, title, and section.
6. Documented test method by number and revision of instruction, procedure, or drawing.
7. Acceptance criteria.
8. Description of instruments used (i.e. Measuring and Test Equipment identification, Calibration due date, etc.) and as applicable, record of test or sampling conditions.
9. Clear identification of the item or component tested, including, but not limited to, the use of serial, lot, batch, heat, mill numbers, sections, joints, weld maps, and etc. as appropriate.
10. Examination and test data.
11. Statement of whether the work complies with project requirements.
12. Description of discrepant or nonconforming conditions.
13. Recommendations for re-testing and re-examination.
14. Name, signature and, as applicable, certification level of individuals conducting and/or accepting examinations and tests.
    a. Nondestructive examination and visual weld inspection reports shall be signed by the NDE Level II or III or the AWS-CWI (visual weld inspector) who performed the examination and who interpreted the results.

15. When radiographic examinations are performed, the radiographic film shall be submitted with the report(s) and identified by cross-reference of each film exposure to a weld map. Radiographic film shall meet the requirements of the applicable code/standard as specified in the contract.

D. Certificates:

1. As required, submit copies of licenses, certifications, correspondence, records, and similar documents, established for compliance with standards and regulations bearing on performance of the work.

1.4 QUALITY MANAGEMENT SYSTEM

A. Quality Assurance Program and Implementing Procedures:

1. The Contractor shall document, implement, and maintains quality assurance program (QAP) that utilizes elements of a nationally or internationally recognized consensus standard or equivalent that includes the following requirements, as a minimum.
   - Organizational Structure, including a description of roles and responsibilities.
   - Indoctrination, training and qualification and/or certification of project personnel.
   - Implementing procedures and/or instructions that describe step by step activities.
   - Document Control, to ensure only correct documents are being used.
   - Control of Measuring and Test Equipment.
   - Control of Nonconforming Items.
   - Corrective Action management to identify and correct programmatic issues.
   - Quality Records, which are protected from loss or deterioration and are submitted.

When specified, submit the QAP and implementing procedures as required by specification 014000 Section 1.3. Implementing procedures shall be available upon request.

2. Contractor shall ensure that all appropriate technical and quality requirements flow down to each sub tier contractor at all levels. Contractor shall also ensure that each sub tier contractor at all levels is appropriately qualified to perform the subcontracted Work. Maintain objective evidence of successful flow down of requirements to, and qualifications of, sub tier contractors.

B. Contractor Nonconformance Reporting:

1. Report to the Battelle Contracts Representative any nonconformance or deviation from Battelle's technical requirements. Utilize Battelle's Contractor Nonconformance Report (CNCR) available at www.pnl.gov/contracts/documents. The completed CNCR shall be submitted by the Contractor to the Battelle Contracts Representative to request Battelle to accept a deliverable not meeting all of Battelle's technical requirements. The decision whether to accept or reject such a request shall be within Battelle's sole discretion, and the Contractor shall not proceed in accordance with the requested deviation or present for inspection or acceptance any product produced in accordance with such deviation, unless and until Battelle's written approval on the CNCR is received by the Contractor.

C. Additional Battelle Quality Assurance Clauses may be included in the Contract, Part II Contract Clauses, as applicable.

1.5 QUALITY CONTROL

A. Battelle Responsibilities:

1. All examination and other testing shall be the responsibility of the Contractor.

B. Contractor Responsibilities:

1. Perform all work in strict conformance to Contract requirements.
2. Testing activities shall be performed in accordance with documented instructions, procedures, or drawings. The activities shall be described to a level of detail commensurate with the complexity of the test or examination and the need to assure consistent results.
3. Perform and document examinations and tests as specified in the Contract documents and as required by specified Codes and Standards. Coordinate sequence of activities to accommodate required examinations and tests with a minimum of delay. Conduct examinations, re-testing and re-examination, for construction that revised or replaced Work that failed to comply with requirements established by the Contract documents.
4. Specified examinations, tests, or Battelle performed inspections do not relieve the Contractor from the requirement to implement additional Quality Assurance and/or Quality Control requirements nor do they relieve the Contractor of compliance with other Contract requirements.
5. The contractor is responsible for ensuring that items being furnished under this contract are genuine, (i.e., not Suspect/Counterfeit) and match the quality, test report, markings, and/or fitness for use required by the contract. Controls shall be established to assure that only correct and accepted items are used and/or installed. Markings or identification shall be maintained on the items (or in documentation traceable to the items) or in a manner that assures identification is established and maintained.
6. Electrical Equipment (including electrical control panels, material, fittings, devices, appliances, luminaries [fixtures], apparatus, and the like used as a part of, or in connection with, an electrical installation) delivered or brought onto the site in performance of this contract must be listed or labeled by an organization currently recognized by OSHA as a nationally recognized testing laboratory (NRTL).
7. Measuring and Testing Equipment (M&TE)
   a. When tools, gauges, instruments, or other measuring and testing equipment (M&TE) is required for inspection and/or test activities, the contractor shall ensure they are controlled, calibrated at specified periods, and maintained. M&TE shall be calibrated using standards traceable to the National Institutes of Standards and Technologies (NIST) or other nationally or internationally recognized standards when available and appropriate. If no nationally or internationally recognized standards exist, the basis for calibration shall be documented. Calibration and control measures are not required for commercial equipment such as rulers, tape measures, levels, etc., when such equipment can provide the required accuracy without calibration.
   b. M&TE shall bear a label or tag clearly identifying the required recalibration date. Immediately remove out of calibration M&TE from the jobsite.
   c. Visually verify that M&TE is undamaged and in good working order prior to use.
   d. Retain all M&TE calibration certificates and records for Battelle's inspection upon request.

8. Nondestructive Examination (NDE) and Visual Weld Inspection

   a. Specified items requiring nondestructive examination (NDE) shall be examined by qualified/certified personnel in accordance with documented procedures. The Contractor shall maintain records of qualified NDE procedures and qualified/certified NDE personnel.

   b. NDE includes all nondestructive testing methods including but not limited to Radiographic Testing (RT), Penetrant Testing (PT), Magnetic Particle Testing (MPT), Leak Testing (LT), Ultrasonic Testing (UT), and Eddy Current Testing (ET) and including Visual Testing (VT). Nondestructive testing procedures and personnel certification methods other than Visual Weld Inspection shall be in accordance with American Society of Nondestructive Testing standard SNT-TC-1A, latest version in effect unless an earlier edition is specified in the contract.

   c. Visual Weld Inspection procedures shall be in accordance with and address the requirements of the applicable code/standard referenced in the contract. Visual Weld Inspection personnel certification shall be in accordance with American Welding Society (AWS) requirements for a Certified Welding Inspector (CWI) unless specified otherwise in the Contract documents.

1.6 BATTELLE VERIFICATION:

A. General: Battelle will perform acceptance verification and inspection as identified in this and other Contract documents. Contractor shall ensure that Contractor personnel have completed examinations, and approved portions, of work in accordance with Contract requirements before notifying Battelle.

1. Specific verification points are defined as follows:

   a. Hold (H): Required for verification of specific construction features before further construction is allowed to proceed.

   b. Receiving (R): Special items of fabrication, equipment, or material scheduled to be delivered to the Contract site, or other designated location, which require Battelle inspection upon arrival and before installation. Notify Battelle within one (1) working day after item arrival.

   c. Witness (W): Selected for inspection at the option of Battelle. Work may proceed upon verbal release by Battelle or upon expiration of one hour beyond scheduled time of witnessing.

2. Notification Requirements: H, R, and W points apply to work performed both on and off the PNNL site. Except where a longer period is specified notify Battelle at least four (4) working hours before each Hold and Witness point.

3. Schedule of R, H, and W points:

   a. Battelle inspection of formwork, base course, and reinforcement prior to placing concrete ---------- (H)

   b. Upon encountering bird nests, animal dens, or wildlife in the work area ---------- (H)

c. Upon discovery of any potential culturally significant resource ---- (H)

d. Battelle inspection of electrical breakers prior to installation-------- (H)

e. Battelle inspection prior to closure of electrical enclosures---------- (H)

f. Placement of concrete ---------- (W)

g. Flushing and chlorination of piping systems----------(W)

h. Energizing of circuits or equipment ---------- (W)

i. GFCI testing ---------- (W)

j. Any functional testing ---------- (W)

k. Leak testing of chilled water and condenser water piping ---------- (W)

PART 2 - PRODUCTS (Not Used)

PART 3 - EXECUTION

3.1 REPAIR AND PROTECTION (Not used)

END OF SECTION 014000

SECTION 015000

TEMPORARY FACILITIES AND CONTROLS

PART 1 - GENERAL

1.1 SUMMARY

A. This Section includes requirements for temporary facilities and controls, including temporary utilities, support facilities, and security and protection facilities.

B. Temporary utilities include, but are not limited to, the following:

1. Water service and distribution.
2. Sanitary facilities, including toilets, wash facilities, and drinking-water facilities.
3. Heating and cooling facilities.
4. Ventilation.
5. Electric power service.
6. Lighting.

C. Support facilities include, but are not limited to, the following:

1. Temporary roads and paving.
2. Project identification and temporary signs.
3. Field offices.
4. Storage and fabrication sheds.
5. Lifts and hoists.
6. Construction aids and miscellaneous services and facilities.

D. Security and protection facilities include, but are not limited to, the following:

1. Environmental protection.
2. Site enclosure fence.
3. Security enclosure and lockup.
4. Barricades, warning signs, and lights.
5. Temporary enclosures.
6. Temporary partitions.
7. Fire protection.

1.2 USE CHARGES

A. Services furnished by Battelle: The Contractor will not be charged a cost or use fee for any temporary facilities, utilities or services supplied to the Contractor in the performance of this work by Battelle.

B. Services furnished by Others: The Contractor is responsible for all use fees for temporary services assessed directly by the State, City or County relative to this Contract Work.

1.3 QUALITY ASSURANCE

A. Standards: Comply with ANSI A10.6, NECA's "Temporary Electrical Facilities," and NFPA 241, “Standard for Safeguarding Construction, Alteration & Demolition 0perations.

B. Tests and Inspections: Arrange for authorities having jurisdiction to test and inspect each temporary utility before use. Obtain required certifications and permits.

1.4 PROJECT CONDITIONS

A. Temporary Use of Permanent Facilities: Installer of each permanent service shall assume responsibility for operation, maintenance, and protection of each permanent service during its use as a construction facility before Battelle’s acceptance, regardless of previously assigned responsibilities.

B. Conditions of Use: The following conditions apply to use of temporary services and facilities by all parties engaged in the Work:

1. Keep temporary services and facilities clean and neat.

1.5 Relocate temporary services and facilities as required by progress of the Work.

PART 2 - PRODUCTS

2.1 MATERIALS and EQUIPMENT

A. Suitable for use intended: Provide materials and equipment suitable for use intended. In general, materials shall be new materials. Equipment shall be in good operating condition with current safety and operational checks performed.

1. Undamaged, previously used materials in serviceable condition may be used if approved by Battelle.
2. Exposed lumber and plywood shall be painted with exterior-grade, acrylic-latex emulsion over exterior primer.
3. Interior walls shall be painted with two coats of interior latex-flat wall paint.
4. Roofs shall be covered with asphalt shingles or roll roofing.
5. Fire Extinguishers: Minimum 10 lbs ABC dry chemical.

B. Self-Contained Toilet Units: Single-occupant units of chemical or aerated re-circulation type; vented; fully enclosed with a glass-fiber-reinforced polyester shell or similar nonabsorbent material.

C. Heating Equipment: Temporary heating system shall be a vented, self-contained electric, liquefied-propane gas (LPG) or fuel oil heater with individual space thermostatic control.

1. Electric heaters shall be used for all applications unless the required power supply is not available.
2. Use of gasoline-burning space heaters, open-flame heaters, or salamander-type heating units is prohibited.
3. Heating Units: Listed and labeled, by a testing agency acceptable to authorities having jurisdiction, and marked for intended use for type of fuel being consumed.

D. Electrical Outlets: Properly configured, NEMA-polarized outlets to prevent insertion of 110- to 120-V plugs into higher-voltage outlets; equipped with ground-fault circuit interrupters, reset button, and pilot light.

E. Power Distribution System Circuits: Where permitted and overhead and exposed for surveillance, wiring circuits, not exceeding 125-V ac, 20-A rating, and lighting circuits may be nonmetallic sheathed cable.

F. Fire Retardant Plastic Sheeting: Materials shall meet the performance criteria of NFPA 701 Method 2 and the material containers shall be labeled to show compliance with the test criteria.

PART 3 - EXECUTION

3.1 INSTALLATION, GENERAL

A. Locate facilities where they will serve Project adequately and result in minimum interference with performance of the Work. Relocate and modify facilities as required.

B. Provide each facility ready for use when needed to avoid delay. Maintain and modify as required. Do not remove until facilities are no longer needed or are replaced by authorized use of completed permanent facilities.

3.2 TEMPORARY UTILITY INSTALLATION

A. General: Engage appropriate local utility company to install temporary service or connect to existing service. Where utility company provides only part of the service, provide the remainder with matching, compatible materials and equipment. Comply with utility company recommendations.

B. Water Service: Use of Battelle's existing water service facilities will be permitted, as long as facilities are cleaned and maintained in a condition acceptable to Battelle. At Substantial Completion, restore these facilities to condition existing before initial use.

1. Provide rubber hoses as necessary to serve Project site.
2. As soon as water is required at each level, extend service to form a temporary water- and fire-protection standpipe. Provide distribution piping. Space outlets so water can be reached with a 100-foot (30-m) hose. Provide one hose at each outlet.

3. Where installations below an outlet might be damaged by spillage or leakage, provide a drip pan of suitable size to minimize water damage. Drain accumulated water promptly from pans.

C. Sanitary Facilities: Use of Battelle's existing sanitary facilities will be permitted, as long as facilities are kept clean in a condition acceptable to Battelle.

D. Sanitary Facilities: Provide temporary toilets, wash facilities, and drinking-water fixtures. Comply with regulations and health codes for type, number, location, operation, and maintenance of fixtures and facilities.

1. Disposable Supplies: Provide toilet tissue, paper towels, paper cups, and similar disposable materials for each facility. Maintain adequate supply. Provide covered waste containers for disposal of used material.
2. Toilets: Use of Battelle's existing toilet facilities is subject to prior approval. When use of Battelle's toilets is permitted, Contractor will ensure that facilities are cleaned and maintained in a condition acceptable to Battelle. At Substantial Completion, restore these facilities to condition existing before initial use.
3. Wash Facilities: Install wash facilities supplied with potable water at convenient locations for personnel who handle materials that require wash up. Dispose of drainage properly. Supply cleaning compounds appropriate for each type of material handled.

   a. Provide safety showers, eyewash fountains, and similar facilities for convenience, safety, and sanitation of personnel.

4. Drinking-Water Facilities: Provide bottled-water, drinking-water units.

   a. Where power is accessible, provide electric water coolers to maintain dispensed water temperature at 45 to 55 deg F.

5. Locate toilets and drinking-water fixtures so personnel need not walk more than two stories vertically or 200 feet (60 m) horizontally to facilities.

E. Heating and Cooling: Provide temporary heating and cooling required by construction activities for curing or drying of completed installations or for protecting installed construction from adverse effects of low temperatures or high humidity. Select equipment from that specified that will not have a harmful effect on completed installations or elements being installed.

1. Maintain a minimum temperature of 50 deg F in permanently enclosed portions of building for normal construction activities, and 65 deg F for finishing activities and areas where finished Work has been installed.

F. Ventilation and Humidity Control: Provide temporary ventilation required by construction activities for curing or drying of completed installations or for protecting installed construction from adverse effects of high humidity. Select equipment from that specified that would not have a harmful effect on completed installations or elements being installed. Coordinate ventilation requirements to produce ambient condition required and minimize energy consumption.

G. Electric Power Service: Provide weatherproof, grounded electric power service and distribution system of sufficient size, capacity, and power characteristics during construction period. Include meters, transformers, overload-protected disconnecting means, automatic ground-fault interrupters, and main distribution switchgear.

1. Install electric power service underground, unless overhead service must be used.
2. Install power distribution wiring overhead and rise vertically where least exposed to damage.
3. Connect temporary service to Battelle's existing power source, as directed by electric company officials.

H. Electric Power Service: Use of Battelle's existing electric power service will be permitted, as long as equipment is maintained in a condition acceptable to Battelle.

I. Electric Distribution: Provide receptacle outlets adequate for connection of power tools and equipment.

1. Provide waterproof connectors to connect separate lengths of electrical power cords if single lengths will not reach areas where construction activities are in progress. Do not exceed safe length-voltage ratio.
2. Provide metal conduit enclosures or boxes for wiring devices.

J. Lighting: Provide temporary lighting with local switching that provides adequate illumination for construction operations and traffic conditions.

1. Install and operate temporary lighting that fulfills security and protection requirements without operating entire system.
2. Install exterior-yard site lighting that will provide adequate illumination for construction operations, traffic conditions, and signage visibility when the Work is being performed.
3. Install lighting for Project identification sign.

a. Telephone Service: Provide temporary telephone service throughout construction period for common-use facilities used by all personnel engaged in construction activities

3.3 SUPPORT FACILITIES INSTALLATION

A. General: Comply with the following:

1. Locate field offices, storage sheds, sanitary facilities, and other temporary construction and support facilities for easy access.
2. Provide noncombustible construction for offices, shops, and sheds located within construction area or within 30 feet of building lines.

a. Comply with NFPA 241.
b. Battelle shall approve such structure.

3. Maintain support facilities until near Substantial Completion. Remove before Substantial Completion. Personnel remaining after Substantial Completion will be permitted to use permanent facilities, under conditions acceptable to Battelle.

B. Temporary Roads and Paved Areas: Construct and maintain temporary roads and paved areas adequate to support loads and to withstand exposure to traffic during construction period. Locate temporary roads and paved areas within construction limits indicated on Drawings.

1. Provide a reasonably level, graded, well-drained sub-grade of satisfactory soil material, compacted to not less than 95 percent of maximum dry density in the top 6 inches.
2. Provide gravel-paving course of sub-base material not less than 3 inches thick; roller compacted to a level, smooth, dense surface.
3. Provide dust-control treatment that is nonpolluting and non-tracking. Reapply treatment as required to minimize dust.

C. Traffic Controls: Provide temporary traffic controls at junction of temporary roads with public roads. Include warning signs for public traffic and "STOP" signs for entrance onto public roads. Comply with requirements of authorities having jurisdiction.

D. Project Identification and Temporary Signs: Prepare Project identification and other signs in sizes indicated. Install signs where indicated to inform public and persons seeking entrance to Project. Do not permit installation of unauthorized signs.

E. Janitorial Services: Provide janitorial services on a daily basis for temporary offices, first-aid stations, toilets, wash facilities, lunchrooms, and similar areas.

F. Common-Use Field Office: Provide an insulated, weather tight, air-conditioned field office for use as a common facility by all personnel engaged in construction activities; of sufficient size to accommodate required office personnel at Project site. Keep office clean and orderly.

G. Common-Use Field Office:

1. A field office is not required for this contract. The Contractor shall maintain all contract original files and all files or records generated during performance of this contract at a suitable location within a 30-minute driving distance, (not to exceed 20 miles) of the Battelle campus. Project Records shall be maintained in a manner that facilitates expedient review of the files.
2. Should the Contractor elect to locate office or storage facilities on site coordinate with the Battelle CM for availability of space and applicable requirements.
3. Contractor shall not use facilities provided for their use by Battelle or DOE on other contracts without Battelle approval. Approval may include monetary consideration if Battelle or DOE is currently paying any site or utility fees related to the Contractor's facility.

H. Storage and Fabrication Sheds: Provide sheds sized, furnished, and equipped to accommodate materials and equipment involved, including temporary utility services. Sheds may be open shelters or fully enclosed spaces within building or elsewhere on-site.

I. Lifts and Hoists: Provide facilities for hoisting materials and personnel. Truck cranes and similar devices used for hoisting materials are considered "tools and equipment" and not temporary facilities.

J. Existing Stair Usage: Use of Battelle's existing stairs will be permitted, as long as stairs are cleaned and maintained in a condition acceptable to Battelle. At Substantial Completion, restore stairs to condition existing before initial use.

3.4 SECURITY AND PROTECTION FACILITIES INSTALLATION

A. Site Enclosure Fence: If required, locate a site enclosure fence where indicated on the drawings, or enclose entire Project site or portion determined sufficient to accommodate construction operations. Install in a manner that will prevent people, dogs, and other animals from easily entering site except by entrance gates.

1. Set fence posts in compacted mixture of gravel and earth or in concrete bases.
2. Provide gates in sizes and at locations necessary to accommodate delivery vehicles and other construction operations.

B. Security Enclosure and Lockup: Install substantial temporary enclosure around partially completed areas of construction. Provide lockable entrances to prevent unauthorized entrance, vandalism, theft, and similar violations of security.

C. Barricades, Warning Signs, and Lights: Comply with standards and code requirements for erecting structurally adequate barricades. Paint with appropriate colors, graphics, and warning signs to inform personnel and public of possible hazard. Where appropriate and needed, provide lighting, including flashing red or amber lights.

1. For safety barriers, sidewalk bridges, and similar uses, provide minimum 5/8-inch- thick exterior plywood.

D. Temporary Enclosures: Provide temporary enclosures for protection of construction, in progress and completed, from exposure, foul weather, other construction operations, and similar activities. Provide temporary weather tight enclosure for building exterior.

1. Where heating or cooling is needed and permanent enclosure is not complete, provide insulated temporary enclosures. Coordinate enclosure with ventilating and material drying or curing requirements to avoid dangerous conditions and effects.
2. Vertical Openings: Close openings of 25 sq. ft. or less with plywood or similar materials.
3. Horizontal Openings: Close openings in floor or roof decks and horizontal surfaces with load-bearing, wood-framed construction.
4. Install fire retardant treated tarpaulins or fire retardant treated plastic sheeting securely using fire-retardant-treated wood framing and other materials.
5. Where temporary wood or plywood enclosure exceeds 100 sq. ft. in area, use fire-retardant-treated material for framing and main sheathing.

E. Temporary Partitions: Erect and maintain fire retardant dust control partitions and temporary enclosures to limit dust and dirt migration and to separate areas from fumes and noise.

F. Temporary Fire Protection: Until fire-protection needs are supplied by permanent facilities, install and maintain temporary fire-protection facilities of types needed to protect against reasonably predictable and controllable fire losses. Comply with NFPA 241.

1. Provide fire extinguishers, installed on walls on mounting brackets, visible and accessible from space being served, some installations may require a sign mounted above.

   a. Locate fire extinguishers where convenient and effective for their intended purpose; provide not less than one extinguisher on each floor at or near each usable stairwell.
   b. Additional extinguishers may be needed for locations where open flame, torch cutting, welding or grinding operations are performed.

2. Store combustible materials in containers in fire-safe locations.
3. Maintain unobstructed access to fire extinguishers, fire hydrants, temporary fire-protection facilities, stairways, and other access routes for firefighting. Prohibit smoking in any Battelle buildings.
4. Supervise welding operations, combustion-type temporary heating units, and similar sources of fire ignition.
5. Permanent Fire Protection: At earliest feasible date in each area of Project, complete installation of permanent fire-protection facility, including connected services, and place into operation and use. Instruct key personnel on use of facilities.
6. Develop and supervise an overall fire-prevention and first-aid fire-protection program for personnel at Project site. Review needs with local fire department and establish procedures to be followed. Instruct personnel in methods and procedures. Post warnings and information.

3.5 OPERATION, TERMINATION, AND REMOVAL

A. Maintenance: Maintain facilities in good operating condition until removal. Protect from damage caused by freezing temperatures and similar elements.

1. Maintain operation of temporary enclosures, heating, cooling, humidity control, ventilation, and similar facilities on a 24-hour basis where required to achieve indicated results and to avoid possibility of damage.
2. Prevent water-filled piping from freezing. Maintain markers for underground lines. Protect from damage during excavation operations.

B. Temporary Facility Changeover: Except for using permanent fire protections as soon as available, do not change over from using temporary security and protection facilities to permanent facilities until Substantial Completion.

C. Termination and Removal: Remove each temporary facility when need for its service has ended, when it has been replaced by authorized use of a permanent facility, or no later than Substantial Completion. Complete or, if necessary, restore permanent construction that may have been delayed because of interference with temporary facility. Repair damaged Work, clean exposed surfaces, and replace construction that cannot be satisfactorily repaired.

1. Materials and facilities that constitute temporary facilities are the property of Contractor.

2. Remove temporary paving not intended for or acceptable for integration into permanent paving. Where area is intended for landscape development, remove soil and aggregate fill that do not comply with requirements for fill or subsoil. Remove materials contaminated with road oil, asphalt and other petrochemical compounds, and other substances that might impair growth of plant materials or lawns. Repair or replace street paving, curbs, and sidewalks at temporary entrances, as required by authorities having jurisdiction.
3. At Substantial Completion, clean and renovate permanent facilities used during construction period.

END OF SECTION 015000

SECTION 016000

ENVIRONMENTAL, SAFETY AND HEALTH

PART 1 - GENERAL

1.1 CONTRACTOR RESPONSIBILITY

A. The Contractor shall obtain all required permits for work to be performed. The Contractor shall assume full responsibility and liability for compliance with all applicable Codes, Standards, Regulations and Statutes pertaining to the environmental, health and safety of personnel during execution of the Work, and shall hold Battelle and the Government harmless for any action or omission on the Contractor's part, or that of the Contractor's employees or subcontractors, that results in fines, penalties, illness, injury or death.

B. Contractor Environment Safety and Health (CESH) Program: The Contractor shall comply with Battelle's 10CFR851 DOE approved Safety and Health Program and shall confirm in writing that it will adopt Battelle's CESH Program as its own. The Contractor shall download and utilize the current revision of the CESH Manual located at http://www.pnnl.gov/contracts/Forms.aspx. Maintain one (1) copy of the CESH Manual at the job site for Contractor personnel reference.

C. The contractor shall download and utilize the latest revision of the following CESH referenced documents. Maintain one (1) set of all relevant documents and forms at the job site for Contractor and sub-tier personnel reference.

1. Hoisting and Rigging: Contractor shall comply with requirements of the approved U.S. Department of Energy Standard DOE-STD-1090 Hoisting and Rigging. The Contractor shall download and utilize the current, approved version of DOE-STD-1090 available at: https://www.standards.doe.gov/standards-documents/1000/1090-AStd-2011. Contractor shall maintain one (1) copy of the Hoisting and Rigging Standard at the Site for reference.

2. Procedures and Policies: Located at http://www.pnnl.gov/contracts/Forms.aspx
   a. Controlling Hot Work
   b. Electrical Work Safety
   c. Environment Protection
   d. Lockout/Tagout
   e. Occupational Medicine
   f. Personal Protective Equipment
   g. Prejob Planning
   h. Program Policy

3. Forms: Located at http://www.pnnl.gov/contracts/Forms.aspx
   a. Class II Penetration Permit
   b. Competent Person Designation
   c. Construction Supervisor Safety Inspection Checklist
   d. Daily Excavations/Trenches Safety Inspection Checklist and Inspection Log
   e. Electrical Work Permit

f. Fall Protection Work Plan
g. Job Safety Analysis
h. Lock and Tag Logsheet
i. Lockout/Tagout Inspection Form
j. Lockout/Tagout Safety Mastercard
k. Lockout/Tagout Written Instruction Form
l. Management Removal of Lock and Tag
m. Orientation Checklist
n. Orientation Record
o. PNNL Contractor Employee Job Task Analysis Form
p. Periodic Inspection Checklist
q. Permit for Working with Open Flame, Welding, Cutting, or Grinding
r. Prejob Safety Planning Signoff
s. Preliminary Hazard Assessment Form
t. Safety Meeting Sign-in Roster
u. Scaffolds Inspection Checklist
v. Subcontractor Electrical Worker Qualification Form
w. Training Attendance Record
x. Weekly Safety Meeting Agenda

1.2 RELATED SECTION

A. Section 017600 – Environmental Protection and Waste Management.

1.3 COMPLIANCE WITH REGULATIONS

A. References: In addition to references in the Construction General Provisions, the following Codes, Standards, Regulations and Statutes designate and define hazardous materials and conditions, and establish procedures for handling these materials and conditions. Omission of any code, regulation, or statutory requirement in this section does not remove any obligation or legal requirement on the part of the Contractor to comply with all legal requirements for the location of the work.

1. Code of Federal Regulations (CFR)

a. 10 CFR 851: Worker Safety and Health Program
b. 10 CFR 850: Chronic Beryllium Disease Prevention Program
c. 29 CFR, Part 1910: Occupational Safety and Health Administration (OSHA) General Industry and Health Standards.
d. 29 CFR, Part 1926: OSHA Construction Industry Standards.
e. 40 CFR, Part 61: National Emission Standards for Hazardous Air Pollutants.
f. 40 CFR, Part 261: Environmental Protection Agency (EPA) Characteristics of Hazardous Waste.
g. 40 CFR, Part 761, EPA Polychlorinated Biphenyls (PCBs), Manufacturing, Processing, Distribution in Commerce and Use Prohibitions.
h. 40 CFR, Part 763: EPA Asbestos.

2. Washington Administrative Code (WAC)

a. Chapter 296-24 WAC, General Safety and Health Standards
b. Chapter 296-27, Record Keeping and Reporting
c. Chapter 296-36, Safety Standards – Compressed Air
d. Chapter 296-45, Safety Standards for Electrical Workers
e. Chapter 296-62, General Occupational Health Standards
f. Chapter 296-67, Safety Standards for Process Safety Management of Highly Hazardous Chemicals
g. Chapter 296-155, Safety Standards for Construction Work
h. Chapter 296-800, Safety and Health Core Rules
i. Chapter 173-303, Dangerous Waste Regulations

3. National Fire Protection Association (NFPA)
   a. NFPA 70, National Electric Code
   b. NFPA 70E, Standard for Electrical Safety in the Work Place
   c. NFPA 241 Standard for Safeguarding Construction Alteration and Demolition
   d. NFPA 54 National Fuel Gas Code

1.4 SUBMITTALS

A. Letter of Confirmation: The Contractor shall submit a letter confirming it will adopt, and flow down to all sub-tiers, the Battelle CESH Program as its own for contract work.

B. Permits, Inspections, Tests, and Reports: The Contractor will provide copies to Battelle of all permits, inspections, tests, and reports required by the Work, Codes, Standards, Regulations and Statutes or the Environmental Safety and Health Program.

C. Job Safety Analysis (JSA): Contractor shall submit a JSA(s) that addresses work to be performed before commencing any work activities on Site.

D. Heavy Equipment: Prior to mobilizing heavy equipment on Site, submit a letter stating that Heavy Equipment brought on site meets all applicable federal and state safety codes and has been inspected by a qualified person. Specify if equipment is owned by contractor or rented. If rented, name the rental company.

E. Declaration of Key Supervisor(s). Key Supervisors include as a minimum the Contractors Jobsite Superintendent and the Site Safety Supervisor. Prior to on-Site work, Contractor shall declare its key supervisor(s) and submit documentation to demonstrate the individuals are adequately qualified to supervise the contract Work. The Site Safety Supervisor must meet the following minimum qualifications:
   1. Safety training in construction through seminars, workshops, conferences, educational courses, etc.
   2. 30-Hour OSHA Construction course within the last three years
   3. Knowledge of CFR, Title 29, Part 1910, Occupational Safety and Health Standards
   4. Knowledge of CFR, Title 29, Part 1926, Safety and Health Regulations for Construction
   5. Knowledge of CFR, Title 10, Part 851, Worker Safety and Health Program

F. Crane Operator Certification: Submit copies of crane operator(s) National Commission for the Certification of Crane Operators (NCCCO) issued by an accredited testing agency before allowing operators to operate cranes on Site. The operator certificate is valid for a five-year period.

G. Hoisting and Rigging: Submit qualifications/training records of individuals (rigger, signal person) that will be engaged in hoisting and rigging activities before allowing individuals to perform hoisting and rigging activities on Site. The qualification period cannot exceed a five year period.

H. Crane Assembly/Disassembly: Submit name of individual(s) who will be acting as the assembly/disassembly director and also meets the criteria for both a competent person and qualified person.

I. Lift Plan: Submit Lift Plan(s) for review as required prior to lifting. Lift plans include; ordinary, critical, or multiple mobile cranes.

J. Forklift Operator Qualifications: Submit qualifications/training records for operators of forklifts prior to using forklifts on Site. Each operator must be evaluated at least once every three years.

K. Electrical Qualifications: Submit a valid Washington State Electrician Journeyman Certificate and proof of NFPA 70E training for individuals performing electrical work. Retraining for NFPA 70E must occur every three years. Use the Activity Specific Electrical Worker Qualification Form.

L. Concrete Pump Truck Qualification: Submit copies of operator qualifications before allowing operators to operate concrete pump trucks onsite. Qualifications must meet WAC 296-155 Part O section (8)(c)(i),(ii), and (iii).

M. Concrete Pump Truck Equipment Inspection: Submit copies of equipment inspection meeting WAC 296-155 Part O section (8)(b)(xvii) before allowing concrete boom pump truck onsite. Equipment inspection must be conducted annually for the first 5 years and semiannually thereafter.

N. Building Energization Plan: Submit copies of means and methods to safely energize new switchboards, panelboards, motor control cabinets, VFD's, and all downstream components for the first time energization. Contractor shall walk down systems and obtain approval from Battelle prior to energizing electrical components. If required, an energization plan shall include; prerequisite section, applicable locks and tags, and step by step procedure for energizing components.

O. Fire Watch Personnel: submit copies for Battelle approval of personnel who will perform fire watch duties. To be considered a qualified fire watch; employees must complete hot work fire watch course 679 and documentation of completion for hands-on fire extinguisher training. Names of fire watch must be posted in work area for Battelle review.

P. Site Safety Orientation: Submit copies of site safety orientation for Battelle approval. The employee orientation shall discuss the following topics; Point of contact, employer and employee responsibilities, site speed and parking, PPE, safety training (ladder, scaffolding, fall protection, etc.), smoking, restrooms, first aid, accidents, injuries, near misses, hazardous conditions, emergency response, fire, weather, police, extinguisher locations, safety goals, stretch and flex, safety inspections, hazard identification and control.

1.5 KEY SUPERVISOR(s)

A. Jobsite Superintendent

1. The Jobsite Superintendent shall be present on site during the performance of all fieldwork to oversee and coordinate the daily work activities. The Jobsite Superintendent shall be identified as the designated line management representative responsible for Contractor and sub-tier contractor's employees and empowered by Contractor to take immediate action to correct unsafe conditions/acts, and other deficiencies identified during inspections.

2. The Jobsite Superintendent shall have a thorough knowledge of construction industry safety standards established by Federal and State regulations and shall provide documentation that they have attended a 30 hour OSHA Construction Course within the last three years. This individual shall have the authority and responsibility to identify and correct hazardous and unsafe conditions, acts and non-compliances.

3. The Jobsite Superintendent shall ensure that the Site Safety Supervisor is fully engaged and empowered to oversee and implement the CESH Program requirements.

4. Copies of the following documents shall be maintained at the jobsite for Battelle review; safety inspections, employee orientations, employee training records, weekly and monthly safety meeting records, equipment inspections, and competent person designations.

B. Site Safety Supervisor.

1. The designated Site Safety Supervisor(s) must be on site during the performance of all fieldwork and shall be responsible for oversight of Contractor's and sub-tier contractor's implementation of the CESH Program.

2. Contractor's Site Safety Supervisor(s) shall be responsible for implementation of the CESH Program and ensuring job-site safety requirements and procedures are being accomplished, to include: conducting employee training; performing safety inspections of work; conducting weekly safety meetings with craft and sub-tier employees; and providing monthly report to Battelle documenting safety activities. The Safety Representative will also be responsible for a continuing survey/trending analysis of Contractor's operations, to ensure that probable causes of injury and accident are controlled and the operating equipment, and facilities are used, inspected, and maintained as required by applicable safety and health regulations.

3. The Safety Supervisor designation and responsibility may be shared with responsibilities and designation of the Contractors Jobsite Superintendent if the Jobsite Superintendent meets the minimum Safety Supervisor qualification requirements.

1.6 SAFE WORK COMMUNICATION

A. The Division 01 may provide additional information regarding special hazards such as: asbestos, beryllium, lead, silica, gauss field, and specialty research equipment. The contractor shall incorporate these facility hazards into their Job Safety Analysis along with work to be performed, permits, training/qualifications, special tools or materials, pre- and post-notification

requirements, pre- and post-job meetings, system/equipment configuration and verification, outages, waste disposal, and environmental and/or worker safety hazards.

B. Preconstruction Safety Meeting: Prior to commencing construction, representatives of the Contractor's management, including the Jobsite Superintendent, Site Safety Supervisor, and the Subcontractors shall meet with Battelle to evaluate hazards associated with the Work and establish ES&H standards and requirements which if properly implemented, provide adequate assurance that employees, the public, and the environment are protected from adverse consequences.

1. The CESH Manual shall be reviewed and applicable sections pertinent to the Work shall be discussed.

2. The Contractor shall advise Battelle of any special safety restrictions it has established so that Battelle and other Project or Site personnel can be notified of these restrictions.

3. No later than three (3) calendar days after the Preconstruction Safety Meeting, the Contractor shall distribute minutes of the meeting to Battelle for information and record.

4. Battelle and the Contractor shall walk down the construction site prior to commencing work.

C. Pre-Job Briefing: Prior to commencing construction, and as required throughout the period of performance, the Battelle Construction Manager and Contractor's Site Safety Supervisor shall conduct a pre-job briefing. The briefing shall incorporate feedback and participation of all workers to confirm that all parties understand the work scope, hazards, mitigations and expectations. Briefing content and attendance shall be documented and retained on site.

1. At a minimum the initial briefing shall include:
   a. Scope of the work to be performed.
   b. Hazards and mitigation of those hazards.
   c. Required work procedures.
   d. Emergency response, including communications and actions taken to confirm that emergency routes remain clear throughout the job.
   e. Personnel roles, responsibilities, required training and work restrictions.
   f. Documentation administration.

2. When any of the following conditions exist, an additional briefing shall be conducted. Only the items or activities affected need be discussed.
   a. A change in area or facility conditions that may affect the safety of employees, public or environment.
   b. Work scope has changed from the initial briefing.
   c. Hazards or risks have changed or additional information has become available that clarifies previously indeterminate or different assumptions.
   d. Personnel assignments have changed or new personnel are added.
   e. Work has stopped long enough to create confusion when the work is resumed.
   f. Activity has stopped or has been shutdown for a period of greater than seven consecutive days.
   g. An additional briefing is requested by Battelle, the Contractor or a sub-tier contractor.

D. Monthly Safety Meeting: Contractor's Site Safety Supervisor shall conduct a monthly meeting with Contractor employees (including subcontractors) to review work hazards and controls, and to address particular requirements associated with work in progress and work upcoming. The meeting may also be used for training to applicable requirements identified in the CESH Manual. Contractor shall record minutes of the meeting and transmit to Battelle for information and record along with signed roster of the individuals in attendance.

E. Weekly Safety Meeting: Each Contractor (or Subcontractor) shall conduct a weekly safety meeting with their employees to review work hazards and controls, and to address particular requirements associated with work in progress and work upcoming. The meeting may also be used for training to applicable requirements identified in the CESH Manual. Contractor shall record minutes of the meeting and transmit to Battelle for information and record along with signed roster of the individuals in attendance.

F. Employee Orientation: All new employees to the project shall be required to attend an initial orientation given by the Contractor's Site Safety Supervisor. This orientation shall include the site-specific safety requirements (i.e. training, JSA, injury reporting, emergency contact number, housekeeping requirements, etc.). Minimum Personal Protective Equipment (PPE) requirements for employees to work on Site includes: safety glasses, ankle high substantial footwear and high visibility vests or clothing. Substantial footwear is defined as; footwear made from leather or equally firm material and excludes high heels, open toes, sandals, tennis shoes, and cloth footwear. footwear made from leather or equally firm material and excludes high heels, open toes, sandals, tennis shoes, and cloth footwear.

G. Tool Box Meeting: Contractor's Site Safety Supervisor shall conduct and document a daily "Tool Box" meeting to review specific work operations to be performed that day, ensure that the Job Hazard Analysis adequately addresses hazards and controls, and that employees possess adequate knowledge of the requirements to perform the work. Documentation shall include subjects discussed and documented attendance at a minimum. Retain documentation records on Site.

H. Stretch and Flex Program: To promote employee wellness and an injury free work environment the contractor shall conduct daily stretching exercises to warm up muscles and help prevent soft tissue injuries. The stretch and flex component should not exceed 10 minutes.

I. Housekeeping: Good housekeeping is a necessary component for maintaining a safe work environment in construction. The contractor is responsible for establishing and maintaining good housekeeping practices. Practices including developing and implementing a daily and weekly schedule for regular housekeeping. Daily clean-up includes; instructing employees to clean-up work areas, placing trash in proper receptacles, ensuring walkways are free of trips, slips, poorly placed extension cords, and fall hazards. Weekly clean-up includes; ensuring all trash is removed, storage areas are organized, areas are swept, extension cords are rolled-up.

J. Job Safety Analysis: All work sequences, steps and processes shall be evaluated for the hazards the activity presents to employees, systems, services, buildings, structures and/or the environment, and shall provide tools, controls and adequate training to perform such work safely. Contractor shall document the analysis of identified hazards and the subsequent worker notification and training. Dependent on the Contractor's approach to the executing the work items addressed in the JSA shall include as required, but not be limited to the following;

1. Barricades and Signs

2. Fire Prevention
3. Hazardous Materials and Communication
4. Concrete Health Hazards
5. Hoisting and Rigging
6. Fall Protection
7. Ladders
8. Painting
9. Power and Hand Tools
10. Welding and Cutting
11. Heat/Cold Stress
12. Personal Protective Equipment
13. Aerial Lifts
14. Scaffolds
15. Lockout/Tagout
16. Electrical Safety
17. Stop Work Authority
18. System Outages (utilities, fire protection, & communications)
19. Respiratory Protection
20. Mechanized Equipment
21. Pressure Testing

1.7 GENERAL TRAINING (BY CONTRACTOR)

A. The Contractor is required to provide proof of training/certification for employees whose work/job description would require the following safety training courses. Required training is dependent on the Contractor's approach to executing the work. The training listed below is to be provided by the Contractor, and is solely at the Contractor's expense:

1. Aerial Lift Operator Training
2. Crane Operation (NCCCO Training)
3. Rigging – Initial and Advanced
4. Heavy Equipment Operation
5. Electrical Worker Safety Training
6. Fall Protection Training
7. Forklift Training
8. Scaffolding Erector
9. Scaffolding Inspector
10. Scaffolding User
11. Ladder Safety
12. Confined Space Training
13. Powder Actuated Fastener Training
14. Hazard Communication

15. Hot Work Fire Watch
16. Hot Work Permit
17. Fire Extinguisher
18. First Aid Provider
19. Hearing Protection
20. Personnel Protective Equipment
21. Respiratory Protection
22. Silica

1.8 EMERGENCY NOTIFICATIONS

A. Post emergency first aid information and Battelle and Hanford Site emergency Telephone Numbers at the work site.
ON-SITE Emergency (Police/Fire/Rescue/Hazmat) .....(509) 375-2400

OFF-SITE Emergency (Police/Fire/Rescue/Hazmat).....Dial 911

1.9 MEDICAL FIRST AID

A. Contractor shall have on-site capability to treat minor first aid, non-emergency events. Contractor shall be responsible to coordinate with a qualified medical provider for any required first line medical attention, beyond minor first aid cases.

B. Medical Provider: The Contractor will establish and provide comprehensive occupational medical services to its employees and each of its lower-tier employees as described in the Construction General Provisions.

1.10 EMERGENCY SUSPENSION OF WORK

A. When notified of non-compliance with the safety or health provisions of the Contract, immediately correct the unsafe or unhealthy condition.

1. If the Contractor fails to comply promptly, all or part of the work will be stopped by notice from Battelle.

2. When, in the opinion of and by notice given by Battelle, the Contractor has taken satisfactory corrective action, work may resume.

3. The Contractor shall not be allowed any extension of time or compensation for damages in connection with a work stoppage for an unsafe or unhealthy condition.

1.11 PROTECTION OF PERSONNEL AND EQUIPMENT

A. Take all necessary precautions to prevent injury to Contractor employees, Battelle, the public, or damage to property of others or the environment. The public includes all persons not employed by the Contractor or a subcontractor.

PART 2 - PRODUCTS (not used)

PART 3 - EXECUTION

3.1 EMERGENCY RESPONSE

A. Battelle will provide emergency response for situations arising on the Site as noted in paragraph 1.7.A above. All injuries, accidents and incidents shall be reported to Battelle's Construction Manager, including fires that are extinguished without causing damage.

3.2 INTEGRATED SAFETY MANAGEMENT SYSTEM

A. Consistent with the requirements of 10 CFR 851, the Contractor and each of their Subcontractors will plan and perform work in accordance with Integrated Safety Management core functions – define the scope of work, identify/analyze hazards, develop/implement hazard controls, perform work within controls, and provide feedback and continuous improvement at job task completion. The Contractor shall ensure workers participate in the ISM core functions and shall provide evidence of using these work planning functions upon request.

3.3 DAILY WORK PLANNING

A. The Contractor is expected to brief all employees and subcontractor employees daily on the work activities and associated hazards planned for each day. This is best accomplished by supervisors meeting prior to the morning pre-job briefing and coordinating and planning interdisciplinary work activities and then passing the information on to the general employees at their pre-job briefing. Pre-job briefings shall be documented including; work activities, hazards, and hazard controls. The pre-job briefing is an excellent time to provide worker feedback from safety observations and non-routine activities.

3.4 SAFETY INSPECTIONS

A. Daily Safety Inspection: The Contractor Site Safety Supervisor shall document a daily walk-through safety inspection.

B. Weekly Safety Inspection: The Contractor and its subcontractors shall conduct a weekly work site safety inspection. Participants for the walk-through include the Site Safety Supervisor, Jobsite Superintendent, other Contractor/Subcontractor management and representative craft employees. Schedule and provide notification such that the Battelle Construction Manager may participate.

3.5 WORKER SAFETY – WEATHER CONDITIONS

A. To ensure worker safety, work or portions of work may be temporarily and incrementally shut down due to high winds, lighting, or other inclement weather as determined by Battelle. Contractor will not be additionally compensated in terms of cost or schedule for weather related shutdowns. Battelle will issue weather warnings via radio, telephone, public announcement, or in person. The Contractor shall ensure that all contractor and subcontractor personnel are apprised of the warnings and take the required actions as stated below.

1. Contact 375-2124 and/or monitor local radio stations for inclement weather closure and delay information before reporting to site. During inclement weather delay or closure conditions the Contractor shall not proceed with the work without authorization by the Construction Manager.

2. Sustained winds greater than 15 mph – the necessity for crane operations will be closely scrutinized.

3. Sustained winds greater than 25 mph and/or gusts greater than 40 mph – all crane activities must cease and be secured. All loose outdoor material shall be secured. The Contractor's safety representative shall evaluate work on roofs or elevated work surfaces before continuing. All personnel working outdoors are required to wear safety goggles. Depending on dust hazards, work may be stopped. Personnel may be directed to shelter.

4. Sustained winds greater than 30 mph and/or gusts greater than 45 mph – all outdoor work activities may be stopped. Personnel may be directed to shelter.

5. Sustained winds greater than 50 mph – all outdoor work activities will be stopped. Any activity to secure work for safety purposes must be approved by Battelle and Contractor's Safety Representative. Personnel will be directed to shelter. Site closure may be implemented and all work activities ceased.

6. Thunderstorm/lighting advisory based on lighting activity within a 30 mile radius of the Site – Contractor personnel shall not work on roofs or elevated surfaces. Personnel shall stay away from equipment such as drilling rigs, cranes, boom trucks, or elevated work platforms. These protective measures shall remain in place until Battelle cancels the warning.

7. Contractor shall be responsible to provide snow removal and ensure safe walking and transfer conditions for walkways and access points around all Site offices and work areas and the job-site within the project boundaries.

8. In response to winter storm conditions, Battelle may close the Site. If so, Battelle will make appropriate announcements and coordinate closures or early dismissals.

3.6 HOISTING AND RIGGING/LOAD HANDLING ACTIVITIES

A. Contractor shall comply with requirements of the approved U.S. Department of Energy Standard DOE-STD-1090 Hoisting and Rigging and ASME P30 Planning for Load Handling Activities.

B. Lift Plan Determination: Battelle will make determinations as to when a "lift" requires a "Lift Plan". A lift would require a Lift Plan under any of the following circumstances:

1. If the item being lifted were to be damaged or upset, it could result in a release of hazardous material to the environment which would exceed the established Permissible Environmental Limits (PEL).

2. The item being lifted is unique and, if damaged, would be irreplaceable or not repairable and is vital to a system, facility, or project operation.

3. The cost to replace or repair the item being lifted, or the delay in operations of having the item damaged would have a negative impact on facility, organizational, or budget to the extent that it would affect program commitments.

4. The item, although non-critical, is to be lifted above or in close proximity to a critical item or component.

5. The load being lifted is 95% or more of a crane's chart rating for the maximum radius that will be experienced.

6. Two mobile cranes are lifting the load and the load share equals more than 70% of one crane's chart rating for the maximum radius that will be experienced.

7. To ensure safe working conditions, Battelle may determine that any lift could require a Lift Plan. Lift plans include; ordinary, critical, or multi-piece equipment (i.e. cranes, forklifts, heavy equipment)

C. Load Handling Review Consideration shall include:

1. Potential Hazards to Persons.

2. Hazards in Proximity to Work Area.

3. Complexity of Load Handling Activity

4. Adverse Impact from Environmental Conditions

5. Loading Handling Equipment and Rigging Capacity and/or Performance

NOTE: A PRE-INSTALLATION MEETING SHALL BE HELD BETWEEN THE CONTRACTOR AND BATTELLE TO DISCUSS AND PLAN THE INSTALLATION OF THE CHILLER UNIT. THE DELIVERY, OFF-LOADING, TRANSPORT THROUGH THE BUILDING, AND FINAL PLACEMENT SHALL BE A COORDINATED EFFORT TO MITIGATE HAZARDS, AND SAFETY CONCERN (***anchor points, lift points, pulling/tugging points),*** AND PROVIDE APPROPRIATE MATERIALS, TOOLS, AND PERSONNEL TO PERFORM THE WORK. The contractor shall submit a load handling plan in accordance with this section.

3.7 HAZARDOUS SUBSTANCES

1. Silica: Work activities involving exposure to crystalline silica containing products are considered a foreseeable respiratory hazard during construction activities involving; cutting, grinding, chipping breaking, drilling, sweeping and must be controlled. The Contractor and its sub-tiers shall follow requirements found in section 31 of the CESH manual for controlling respirable crystalline silica. Battelle enforces the 2016 ACGIH TLV of 25 $\mu g/m^3$ for controlling respirable crystalline silica. END OF SECTION 016000.

2. Welding Fumes: Contractors shall evaluate welding fumes and identify control measures using the Job Safety Analysis (JSA) process outlined in section 8.4. Welding fumes need to be assessed by type of metal along with a number of variables when determining control measures such as: weld type, welder setting, base and core/electrode metal, flux coating, work rate, body positioning, location, which all affect the fume generation and ability of fumes to enter the worker's breathing zone. Special emphasis on welding fume constituents, such as manganese, chromium, nickel, cadmium, due to either extremely low exposures limits and recent declaration as carcinogenic and must be a point of emphasis when evaluating welding tasks. Various metals have independent standard that govern their use, for instance hexavalent chromium/nickel associated with stainless steel,

manganese/iron oxide with mild steel, and zinc oxide fumes with galvanized steel. Other considerations associated with welding include hot work permitting, UV, noise, gases, (ozone, NOx, CO) and material coatings. Coatings shall be removed 4 inches on all sides of weld location. Welding related exposures are tied to many variables, PNNL is requiring contractors to provided details of each welding task and when requested provide objective exposure data.

3. COVID-19 Control Plan: Contractor shall develop a COVID-19 exposure control, mitigation, and recovery plan. The plan shall include policies regarding; Covid-19 site supervisor, safety training, social distancing, PPE, sanitation/cleanliness, employee health/symptoms monitoring, job site visitor requirements, incident reporting, site decontamination procedures, and project recovery plan. Contractor shall use the following resources to develop their COVID-19 Plan; State of Washington, Centers for Disease Control and Prevention (CDC), OSHA Guidance on Preparing Workplaces for COVID-19, Benton-Franklin Health District, and PNNL subcontractor COVID-19 checklist.

END OF SECTION 016000

SECTION 017000

ENGINEERING, LAYOUT AND INSTALLATION

PART 1 - GENERAL

1.1 SUMMARY

A. This Section includes general procedural requirements governing execution of the Work including, but not limited to, the following:
   1. General installation of products.
   2. Progress cleaning.
   3. Starting and adjusting.
   4. Protection of installed construction.
   5. Correction of the Work.

1.2 SUBMITTALS

A. Qualification Data: For Land Surveyor / Professional Engineer to demonstrate their capabilities and experience. Include lists of completed projects with project names and addresses, names and addresses of architect and owner, and other information specified.

B. Certificates: Submit certificate signed by Land Surveyor / Professional Engineer certifying that location and elevation of improvements comply with requirements.

C. Landfill Receipts: Submit copy of receipts issued by a landfill facility, licensed to accept hazardous materials, for hazardous waste disposal.

D. Certified Surveys: Submit two (2) copies signed by Land Surveyor / Professional Engineer.

E. Final Property Survey: Submit three (3) copies showing the Work performed and record survey data.

1.3 QUALITY ASSURANCE

A. Land Surveyor Qualifications: A professional land surveyor who is legally qualified to practice in jurisdiction where Project is located and who is experienced in providing land-surveying services of the kind indicated.

PART 2 - PRODUCTS (Not Used)

PART 3 - EXECUTION

3.1 EXAMINATION

A. Existing Conditions: The existence and location of site improvements, utilities, and other construction indicated as existing are not guaranteed. Before beginning work, investigate and verify the existence and location of mechanical and electrical systems and other construction affecting the Work.

1. Before construction, verify the location and points of connection of utility services.

B. Existing Utilities: The existence and location of underground and other utilities and construction indicated as existing are not guaranteed. Before beginning site-work, investigate and verify the existence and location of underground utilities and other construction affecting the Work.

1. Before construction, verify the location and invert elevation at points of connection of sanitary sewer, storm sewer, and water-service piping; and underground electrical services.
2. Furnish location data for work related to Project that must be performed by public utilities serving Project site.

C. Acceptance of Conditions: Examine substrates, areas, and conditions, with Installer or Applicator present where indicated, for compliance with requirements for installation tolerances and other conditions affecting performance. Record observations.

1. Written Report: Where a written report listing conditions detrimental to performance of the Work is required by other Sections, include the following:

   a. Description of the Work.
   b. List of detrimental conditions, including substrates.
   c. List of unacceptable installation tolerances.
   d. Recommended corrections.

2. Verify compatibility with and suitability of substrates, including compatibility with existing finishes or primers.
3. Examine roughing-in for mechanical and electrical systems to verify actual locations of connections before equipment and fixture installation.
4. Examine walls, floors, and roofs for suitable conditions where products and systems are to be installed.
5. Proceed with installation only after unsatisfactory conditions have been corrected. Proceeding with the Work indicates acceptance of surfaces and conditions.

3.2 PREPARATION

A. Existing Utility Information: Furnish information to Battelle that is necessary to adjust, move, or relocate existing utility structures, utility poles, lines, services, or other utility appurtenances located in or affected by construction. Coordinate with authorities having jurisdiction.

B. Existing Utility Interruptions: Request authorization to perform isolations and conduct outages in writing a minimum of seven (7) calendar days in advance. Contractor shall submit a

completed Isolation/Outage request permit form to the Battelle CM to request the isolation and/or outage necessary.

C. Field Measurements: Take field measurements as required to fit the Work properly. Recheck measurements before installing each product. Where portions of the Work are indicated to fit to other construction, verify dimensions of other construction by field measurements before fabrication. Coordinate fabrication schedule with construction progress to avoid delaying the Work.

D. Space Requirements: Verify space requirements and dimensions of items shown diagrammatically on Drawings.

E. Review of Contract Documents and Field Conditions: Immediately on discovery of the need for clarification of the Contract Documents, submit a request for information to Battelle. Include a detailed description of problem encountered, together with recommendations for changing the Contract Documents.

3.3 INSTALLATION

A. General: Locate the Work and components of the Work accurately, in correct alignment and elevation, as indicated.

1. Make vertical work plumb and make horizontal work level.
2. Where space is limited, install components to maximize space available for maintenance and ease of removal for replacement.
3. Conceal pipes, ducts, and wiring in finished areas, unless otherwise indicated.
4. Maintain minimum headroom clearance of (8 feet) in spaces without a suspended ceiling.

B. Comply with manufacturer's written instructions and recommendations for installing products in applications indicated.

C. Install products at the time and under conditions that will ensure the best possible results. Maintain conditions required for product performance until Substantial Completion.

D. Conduct construction operations so no part of the Work is subjected to damaging operations or loading in excess of that expected during normal conditions of occupancy.

E. Tools and Equipment: Do not use tools or equipment that produce harmful noise levels.

F. Anchors and Fasteners: Provide anchors and fasteners as required to anchor each component securely in place, accurately located and aligned with other portions of the Work.

1. Mounting Heights: Where mounting heights are not indicated, mount components at heights directed by Battelle.
2. Allow for building movement, including thermal expansion and contraction.

G. Joints: Make joints of uniform width. Where joint locations in exposed work are not indicated, arrange joints for the best visual effect. Fit exposed connections together to form hairline joints.

H. Hazardous Materials: Use products, cleaners, and installation materials that are not considered hazardous.

3.4 PROGRESS CLEANING

A. General: Clean Project site and work areas daily, including common areas. Coordinate progress cleaning for joint-use areas where more than one installer has worked. Enforce requirements strictly. Dispose of materials lawfully.

1. Comply with requirements in NFPA 241 for removal of combustible waste materials and debris.
2. Do not hold materials more than 7 days during normal weather or 3 days if the temperature is expected to rise above (80 deg F).
3. Containerize hazardous and unsanitary waste materials separately from other waste. Mark containers appropriately and dispose of legally, according to regulations.

B. Site: Maintain Project site free of waste materials and debris.

C. Work Areas: Clean areas where work is in progress to the level of cleanliness necessary for proper execution of the Work.

1. Remove liquid spills promptly.
2. Where dust would impair proper execution of the Work, broom-clean or vacuum the entire work area, as appropriate.

D. Installed Work: Keep installed work clean. Clean installed surfaces according to written instructions of manufacturer or fabricator of product installed, using only cleaning materials specifically recommended. If specific cleaning materials are not recommended, use cleaning materials that are not hazardous to health or property and that will not damage exposed surfaces.

E. Concealed Spaces: Remove debris from concealed spaces before enclosing the space.

F. Exposed Surfaces: Clean exposed surfaces and protect as necessary to ensure freedom from damage and deterioration at time of Substantial Completion.

G. Cutting and Patching: Clean areas and spaces where cutting and patching are performed. Completely remove paint, mortar, oils, putty, and similar materials.

1. Thoroughly clean piping, conduit, and similar features before applying paint or other finishing materials. Restore damaged pipe covering to its original condition.

H. Waste Disposal: Burying or burning waste materials on-site will not be permitted. Washing waste materials down sewers or into waterways will not be permitted.

I. Protective Coatings: Apply protective covering where required to ensure protection from damage or deterioration at Substantial Completion.

J. Completed Work: Clean and provide maintenance on completed construction as frequently as necessary through the remainder of the construction period. Adjust and lubricate operable components to ensure operability without damaging effects.

K. Limiting Exposures: Supervise construction operations to assure that no part of the construction, completed or in progress, is subject to harmful, dangerous, damaging, or otherwise deleterious exposure during the construction period.

3.5 STARTING AND ADJUSTING

A. Start equipment and operating components to confirm proper operation. Repair or remove malfunctioning units, replace with new units, and retest.

B. Adjust operating components for proper operation without binding. Adjust equipment for proper operation.

C. Test each piece of equipment to verify proper operation. Test and adjust controls and safeties. Repair or replace damaged and malfunctioning controls and equipment.

D. Manufacturer's Field Service: Use only factory-authorized service representative if work is required to inspect field-assembled components and equipment installation.

3.6 PROTECTION OF INSTALLED CONSTRUCTION

A. Provide final protection and maintain conditions that ensure installed Work is without damage or deterioration at time of Substantial Completion.

B. Comply with manufacturers written instructions for temperature and relative humidity.

3.7 CORRECTION OF THE WORK

A. Repair or remove and replace defective construction. Restore damaged substrates and finishes.

1. Repairing includes replacing defective parts, refinishing damaged surfaces, touching up with matching materials, and properly adjusting operating equipment.

B. Restore permanent facilities used during construction to their specified condition.

C. Remove and replace damaged surfaces that are exposed to view if surfaces cannot be repaired without visible evidence of repair.

D. Repair components that do not operate properly. Remove and replace operating components that cannot be repaired.

E. Remove and replace chipped, scratched, and broken glass or reflective surfaces.

END OF SECTION 017000

SECTION 017310

CUTTING AND PATCHING

PART 1 - GENERAL

1.1 SUMMARY

A. This Section includes procedural requirements for cutting and patching.

1.2 DEFINITIONS

A. Cutting: Removal of existing construction necessary to permit installation or performance of other Work.

B. Patching: Fitting and repair work required to restore surfaces to original conditions after installation of other Work.

1.3 SUBMITTALS

A. Cutting and Patching Proposal: Submit a proposal describing procedures at least 10 days before the time cutting and patching will be performed, requesting approval to proceed. Include the following information:

1. Extent: Describe cutting and patching, show how they will be performed, and indicate why they cannot be avoided.
2. Changes to Existing Construction: Describe anticipated results. Include changes to structural elements and operating components as well as changes in building's appearance and other significant visual elements.
3. Products: List products to be used and firms or entities that will perform the Work.
4. Dates: Indicate when cutting and patching will be performed.
5. Utilities: List utilities that cutting and patching procedures will disturb or affect. List utilities that will be relocated and those that will be temporarily out of service. Indicate how long service will be disrupted.
6. Structural Elements: Where cutting and patching involve adding reinforcement to structural elements, submit details and engineering calculations showing integration of reinforcement with original structure.
7. Battelle Approval: Obtain approval of cutting and patching proposal before cutting and patching. Approval does not waive right to later require removal and replacement of unsatisfactory work.

    a. SUBSURFACE SCAN. The Contractor shall perform a subsurface of concrete walls and floors using penetrating radar, a minimum of two (2) feet each direction from the planned edge of the penetration. Contractor shall document the location of all items detected during the scan and shall not proceed without Battelle

direction when obstructions are identified within twelve (12 inches) of the planned edge of the penetration.

1.4 QUALITY ASSURANCE

A. Structural Elements: Do not cut and patch structural elements in a manner that could change their load-carrying capacity or load-deflection ratio.

B. Operational Elements: Do not cut and patch the following operating elements and related components in a manner that results in reducing their capacity to perform as intended or that results in increased maintenance or decreased operational life or safety.

1. Primary operational systems and equipment.
2. Air or smoke barriers.
3. Fire-protection systems.
4. Control systems.
5. Communication systems.
6. Conveying systems.
7. Electrical wiring systems.
8. Operating systems of special construction in Division 13 Sections.

C. Miscellaneous Elements: Do not cut and patch the following elements or related components in a manner that could change their load-carrying capacity, that results in reducing their capacity to perform as intended, or that results in increased maintenance or decreased operational life or safety.

1. Water, moisture, or vapor barriers.
2. Membranes and flashings.
3. Exterior curtain-wall construction.
4. Equipment supports.
5. Piping, ductwork, vessels, and equipment.
6. Noise- and vibration-control elements and systems.
7.

D. Visual Requirements: Do not cut and patch construction in a manner that results in visual evidence of cutting and patching. Do not cut and patch construction exposed on the exterior or in occupied spaces in a manner that would, in Battelle's opinion, reduce the building's aesthetic qualities. Remove and replace construction that has been cut and patched in a visually unsatisfactory manner.

1. If possible, retain original Installer or fabricator to cut and patch exposed Work listed below. If it is impossible to engage original Installer or fabricator, engage another recognized, experienced, and specialized firm.

   a. Processed concrete finishes.
   b. Stonework and stone masonry.
   c. Ornamental metal.
   d. Matched-veneer woodwork.
   e. Preformed metal panels.

f. Roofing.
g. Firestopping.
h. Window wall system.
i. Stucco and ornamental plaster.
j. Terrazzo.
k. Finished wood flooring.
l. Fluid-applied flooring.
m. Aggregate wall coating.
n. Wall covering.
o. HVAC enclosures, cabinets, or covers.

E. Cutting and Patching Conference: Before proceeding, meet at Project site with parties involved in cutting and patching, including mechanical and electrical trades. Review areas of potential interference and conflict. Coordinate procedures and resolve potential conflicts before proceeding.

1.5 WARRANTY

A. Existing Warranties: Remove, replace, patch, and repair materials and surfaces cut or damaged during cutting and patching operations, by methods and with materials so as not to void existing warranties.

PART 2 - PRODUCTS

2.1 MATERIALS

A. General: Comply with requirements specified in other Sections of these Specifications.

B. Existing Materials: Use materials identical to existing materials. For exposed surfaces, use materials that visually match existing adjacent surfaces to the fullest extent possible.

1. If identical materials are unavailable or cannot be used, use materials that, when installed, will match the visual and functional performance of existing materials.

PART 3 - EXECUTION

3.1 EXAMINATION AND SCANNING

A. Examine surfaces to be cut and patched and conditions under which cutting and patching are to be performed.

1. Scanning: Prior to drilling or cutting scan building systems for conduit, structural reinforcement and other systems.
2. Compatibility: Before patching, verify compatibility with and suitability of substrates, including compatibility with existing finishes or primers.

3. Proceed with installation only after unsafe or unsatisfactory conditions have been corrected.

3.2 PREPARATION

A. Temporary Support: Provide temporary support of Work to be cut.

B. Protection: Protect existing construction during cutting and patching to prevent damage. Provide protection from adverse weather conditions for portions of Project that might be exposed during cutting and patching operations.

C. Adjoining Areas: Avoid interference with use of adjoining areas or interruption of free passage to adjoining areas.

D. Existing Services: Where existing services are required to be removed, relocated, or abandoned, bypass such services before cutting to minimize interruption of services to occupied areas.

3.3 PERFORMANCE

A. General: Employ skilled workers to perform cutting and patching. Proceed with cutting and patching at the earliest feasible time, and complete without delay.

1. Cut existing construction to provide for installation of other components or performance of other construction, and subsequently patch as required to restore surfaces to their original condition.

B. Cutting: Cut existing construction by sawing, drilling, breaking, chipping, grinding, and similar operations, including excavation, using methods least likely to damage elements retained or adjoining construction. If possible, review proposed procedures with original Installer; comply with original Installer's written recommendations.

1. In general, use hand or small power tools designed for sawing and grinding, not hammering and chopping. Cut holes and slots as small as possible, neatly to size required, and with minimum disturbance of adjacent surfaces. Temporarily cover openings when not in use.
2. Existing Finished Surfaces: Cut or drill from the exposed or finished side into concealed surfaces.
3. Concrete: Cut using a cutting machine, such as an abrasive saw or a diamond-core drill.
4. Excavating and Backfilling: Comply with requirements in applicable Division 2 Sections where required by cutting and patching operations.
5. Mechanical and Electrical Services: Cut off pipe or conduit in walls or partitions to be removed. Cap, valve, or plug and seal remaining portion of pipe or conduit to prevent entrance of moisture or other foreign matter after cutting.
6. Proceed with patching after construction operations requiring cutting are complete.

C. Patching: Patch construction by filling, repairing, refinishing, closing up, and similar operations following performance of other Work. Patch with durable seams that are as invisible as

possible. Provide materials and comply with installation requirements specified in other Sections of these Specifications.

1. Inspection: Where feasible, test and inspect patched areas after completion to demonstrate integrity of installation.
2. Exposed Finishes: Restore exposed finishes of patched areas and extend finish restoration into retained adjoining construction in a manner that will eliminate evidence of patching and refinishing.
3. Floors and Walls: Where walls or partitions that are removed extend one finished area into another, patch and repair floor and wall surfaces in the new space. Provide an even surface of uniform finish, color, texture, and appearance. Remove existing floor and wall coverings and replace with new materials, if necessary, to achieve uniform color and appearance.

    a. Where patching occurs in a painted surface, apply primer and intermediate paint coats over the patch and apply final paint coat over entire unbroken surface containing the patch. Provide additional coats until patch blends with adjacent surfaces.

4. Ceilings: Patch, repair, or rehang existing ceilings as necessary to provide an even-plane surface of uniform appearance.
5. Exterior Building Enclosure: Patch components in a manner that restores enclosure to a weathertight condition.

END OF SECTION 017310

SECTION 017320

SELECTIVE DEMOLITION

PART 1 - GENERAL

1.1 SUMMARY

A. This Section includes the following:

1. Demolition and removal of selected portions of building or structure.
2. Demolition and removal of selected site elements.
3. Salvage of existing items to be reused or recycled.

1.2 DEFINITIONS

A. Remove: Detach items from existing construction and legally dispose of them off-site, unless indicated to be removed and salvaged or removed and reinstalled.

B. Remove and Salvage: Detach items from existing construction and deliver them to Battelle.

C. Remove and Reinstall: Detach items from existing construction, prepare them for reuse, and reinstall them where indicated.

D. Existing to Remain: Existing items of construction that are not to be removed and that are not otherwise indicated to be removed, removed and salvaged, or removed and reinstalled.

1.3 MATERIALS OWNERSHIP

A. All materials and equipment except as specified elsewhere shall be retained by the Contractor for disposal and recycling.

1.4 SUBMITTALS

A. Inventory: After selective demolition is complete, submit a list of items that have been removed and salvaged.

1.5 QUALITY ASSURANCE

A. Regulatory Requirements: Comply with governing EPA notification regulations before beginning selective demolition. Comply with hauling and disposal regulations of authorities having jurisdiction.

B. Standards: Comply with ANSI A10.6 and NFPA 241.

C. Conduct review at Project site to comply with requirements in Division 1 Section "Project Management and Coordination." Review methods and procedures related to selective demolition including, but not limited to, the following:

1. Inspect and discuss condition of construction to be selectively demolished.
2. Review structural load limitations of existing structure.
3. Review and finalize selective demolition schedule and verify availability of materials, demolition personnel, equipment, and facilities needed to make progress and avoid delays.
4. Review requirements of work performed by other trades that rely on substrates exposed by selective demolition operations.
5. Review areas where existing construction is to remain and requires protection.

1.6 PROJECT CONDITIONS

A. Battelle will occupy portions of building immediately adjacent to selective demolition area. Conduct selective demolition so Battelle's operations will not be disrupted.

1. Comply with requirements specified in Division 1 Section "Summary."

B. Conditions existing at time of inspection for bidding purpose will be maintained by Battelle as far as practical.

C. Notify Battelle of discrepancies between existing conditions and Drawings before proceeding with selective demolition.

D. Hazardous Materials: Hazardous materials may be present in construction to be selectively demolished.

1. Hazardous materials, or items suspected of containing hazardous materials, shall be handled and disposed of in strict accordance with the Contract Documents and the approved Contractor Job Safety Analysis (JSA).
2. Refrigerant and refrigerant contaminated oils will be removed by Battelle.
3. If known or suspected hazardous materials are unexpectedly discovered do not disturb. Immediately contact the Construction Manager for direction. Do not proceed with the work.

E. Storage or sale of removed items or materials on-site is not permitted.

F. Utility Service: Maintain existing utilities and building systems indicated to remain in service and protect them against damage during selective demolition operations.

1. Maintain fire-protection facilities in service during selective demolition operations.
2. Outages of fire-protection facilities necessary for demolition of specific items may be scheduled by contacting the Battelle 5 days in advance of needed outage.

1.7 WARRANTY

A. Existing Warranties: Remove, replace, patch, and repair materials and surfaces cut or damaged during selective demolition, by methods and with materials so as not to void existing warranties.

PART 2 - PRODUCTS (Not Used)

PART 3 - EXECUTION

3.1 EXAMINATION

A. Verify that utilities have been disconnected and capped.

B. Survey existing conditions and correlate with requirements indicated to determine extent of selective demolition required.

C. Inventory and record the condition of items to be removed and reinstalled and items to be removed and salvaged.

D. When unanticipated mechanical, electrical, or structural elements that conflict with intended function or design are encountered, investigate and measure the nature and extent of conflict. Promptly submit a written report to Battelle.

E. As the Work progresses implement controls to prevent hazards resulting from selective demolition activities.

3.2 UTILITY SERVICES AND MECHANICAL/ELECTRICAL SYSTEMS

A. Existing Services/Systems: Maintain services/systems indicated to remain and protect them against damage during selective demolition operations.

1. Comply with requirements for existing services/systems interruptions specified in Division 1 Section "Summary."

B. Service/System Requirements: Locate, identify, disconnect, and seal or cap off indicated utility services and mechanical/electrical systems serving areas to be selectively demolished.

1. Battelle will arrange to shut off indicated services/systems when requested by Contractor.
2. Arrange to shut off indicated utilities with utility companies.
3. If services/systems are required to be removed, relocated, or abandoned, before proceeding with selective demolition provide temporary services/systems that bypass area of selective demolition and that maintain continuity of services/systems to other parts of building.
4. Cut off pipe or conduit in walls or partitions to be removed. Cap, valve, or plug and seal remaining portion of pipe or conduit after bypassing.

3.3 PREPARATION

A. Site Access and Temporary Controls: Conduct selective demolition and debris-removal operations to ensure minimum interference with roads, streets, walks, walkways, and other adjacent occupied and used facilities.

1. Comply with requirements for access and protection specified in Division 1 Section "Temporary Facilities and Controls."

B. Temporary Facilities: Provide temporary barricades and other protection required to prevent injury to people and damage to adjacent buildings and facilities to remain.

1. Provide protection to ensure safe passage of people around selective demolition area and to and from occupied portions of building.
2. Provide temporary weather protection, during interval between selective demolition of existing construction on exterior surfaces and new construction, to prevent water leakage and damage to structure and interior areas.
3. Protect walls, ceilings, floors, and other existing finish work that are to remain or that are exposed during selective demolition operations.
4. Cover and protect furniture, furnishings, and equipment that have not been removed.
5. Comply with requirements for temporary enclosures, dust control, heating, and cooling specified in Division 1 Section "Temporary Facilities and Controls."

C. Temporary Shoring: Provide and maintain shoring, bracing, and structural supports as required to preserve stability and prevent movement, settlement, or collapse of construction and finishes to remain, and to prevent unexpected or uncontrolled movement or collapse of construction being demolished.

1. Strengthen or add new supports when required during progress of selective demolition.

3.4 SELECTIVE DEMOLITION, GENERAL

A. General: Demolish and remove existing construction only to the extent required by new construction and as indicated. Use methods required to complete the Work within limitations of governing regulations and as follows:

1. Proceed with selective demolition systematically, from higher to lower level. Complete selective demolition operations above each floor or tier before disturbing supporting members on the next lower level.
2. Neatly cut openings and holes plumb, square, and true to dimensions required. Use cutting methods least likely to damage construction to remain or adjoining construction. Use hand tools or small power tools designed for sawing or grinding, not hammering and chopping, to minimize disturbance of adjacent surfaces. Temporarily cover openings to remain.
3. Cut or drill from the exposed or finished side into concealed surfaces to avoid marring existing finished surfaces.
4. Do not use cutting torches until work area is cleared of flammable materials. At concealed spaces, such as duct and pipe interiors, verify condition and contents of hidden

space before starting flame-cutting operations. Maintain fire watch and portable fire-suppression devices during flame-cutting operations.

5. Maintain adequate ventilation when using cutting torches.
6. Remove decayed, vermin-infested, or otherwise dangerous or unsuitable materials and promptly dispose of off-site.
7. Remove structural framing members and lower to ground by method suitable to avoid free fall and to prevent ground impact or dust generation.
8. Locate selective demolition equipment and remove debris and materials so as not to impose excessive loads on supporting walls, floors, or framing.
9. Dispose of demolished items and materials promptly.

B. Removed and Reinstalled Items:

1. Clean and repair items to functional condition adequate for intended reuse. Paint equipment to match new equipment.
2. Pack or crate items after cleaning and repairing. Identify contents of containers.
3. Protect items from damage during transport and storage.
4. Reinstall items in locations indicated. Comply with installation requirements for new materials and equipment. Provide connections, supports, and miscellaneous materials necessary to make item functional for use indicated.

C. Existing Items to Remain: Protect construction indicated to remain against damage and soiling during selective demolition. When permitted by Battelle, items may be removed to a suitable, protected storage location during selective demolition and cleaned and reinstalled in their original locations after selective demolition operations are complete.

3.5 SELECTIVE DEMOLITION PROCEDURES FOR SPECIFIC MATERIALS

A. Concrete: Demolish in sections. Cut concrete full depth at junctures with construction to remain and at regular intervals, using power-driven saw, then remove concrete between saw cuts.

B. Concrete Slabs-on-Grade: Saw-cut perimeter of area to be demolished, then break up and remove.

C. Air-Conditioning Equipment: Remove equipment without releasing refrigerants.

3.6 DISPOSAL OF DEMOLISHED MATERIALS

A. General: Except for items or materials indicated to be reused, salvaged, reinstalled, or otherwise indicated to remain Battelle's property, remove demolished materials from Project site and legally dispose of them in an Battelle-approved landfill.

1. Do not allow demolished materials to accumulate on-site.
2. Remove and transport debris in a manner that will prevent spillage on adjacent surfaces and areas.

3. Remove debris from elevated portions of building by chute, hoist, or other device that will convey debris to grade level in a controlled descent.

B. Burning: Do not burn demolished materials.

C. Disposal: Transport demolished materials off Battelle's property and legally dispose of them.

3.7 CLEANING

A. Clean adjacent structures and improvements of dust, dirt, and debris caused by selective demolition operations. Return adjacent areas to condition existing before selective demolition operations began.

END OF SECTION 017320

SECTION 017600

ENVIRONMENTAL PROTECTION AND WASTE MANAGEMENT

PART 1 - GENERAL

1.1 SUMMARY

A. This section provides requirements for environmental protection and waste management. It also highlights key applicable requirements and best-management practices described in the 40 CFR (Code of Federal Regulations), Washington Administrative Codes (WAC), air regulations, and Washington State Department of Ecology (Ecology) guidance regarding environmental and waste management compliance. Please note that this plan does not provide comprehensive environmental requirements. It is the contractor's responsibility to determine project-specific requirements on case-by-case basis.

1.2 DEFINITIONS

A. Asbestos Abatement Project – A project with known asbestos removal that will be larger than regulatory thresholds and requires notification through the agency.

1. PNNL facilities north of Horn Rapids are under Ecology regulations for asbestos removal, which defines asbestos abatement projects as those removing >160 square feet or >260 linear feet of asbestos containing material.

B. Construction Debris—solid waste, largely inert, resulting from the demolition or razing of buildings, roads, and other man-made structures. Demolition waste consists of, but is not limited to, concrete, brick, bituminous concrete, wood and masonry, roofing and roofing insulation, steel, and minor amounts of other metals like copper.

C. Battelle Representative—the primary Battelle representative at the construction or demolition site is the Construction Manager. Other Battelle representatives may include the Environmental Compliance Representative (ECR) or the waste management Field Service Representative (FSR).

D. Demolition—The wrecking or taking out of any load-supporting structural member of a facility together with any related handling operations or the intentional burning of any facility.

E. Destabilization Project – construction, repair, or demolition of any building or road, or landscaping work on a property, which destabilizes the soil and thus has potential for fugitive dust emissions.

F. Hazardous Material—a chemical or substance that is classified as a physical-hazard material or a health-hazard material.

1. A physical-hazard material is a chemical or substance classified as a combustible liquid, explosive, flammable cryogen, flammable gas, flammable liquid, flammable solid, organic peroxide, oxidizer, oxidizing cryogen, pyrophoric substance, or unstable (reactive) or water-reactive material.
2. A health-hazard material is a chemical or substance classified as a toxic, highly toxic, or corrosive material.
3. Examples of hazardous materials include, but are not limited to, paints, solvents, adhesives, lead solder, asbestos and cadmium brazing material.

G. Hazardous Waste or Dangerous Waste—Solid wastes designated by 40 CFR Part 261 or WAC 173-303 and regulated as hazardous and/or mixed waste by the U.S. Environmental Protection Agency (EPA) or the Washington State Department of Ecology).

H. Other Regulated Waste—Waste that is regulated and managed per applicable regulations and U.S. Department of Energy (DOE) Orders. This includes, but is not limited to, polychlorinated biphenyls (PCBs), asbestos, beryllium, and radiological wastes.

I. Universal Waste – Dangerous wastes including batteries, thermostats, lamps and mercury containing equipment subject to the universal waste requirements of WAC 173-303-573

1.3 REFERENCES

A. Contemporary versions of the following as applicable:

1. 29 CFR 1926.59. 2006. "Hazard Communication." *Code of Federal Regulations*, U.S. Environmental Protection Agency.
2. 40 CFR 61. 2007. "National Emission Standards for Hazardous Air Pollutants." *Code of Federal Regulations*, U.S. Environmental Protection Agency.
3. 40 CFR 82. 2007. "Protection of Stratospheric Ozone." *Code of Federal Regulations*, U.S. Environmental Protection Agency.
4. 40 CFR 261. 2007. "Identification and Listing of Hazardous Waste." *Code of Federal Regulations*, U.S. Environmental Protection Agency.
5. 40 CFR 262. 2006. "Standards applicable to Generators of Hazardous Waste." *Code of Federal Regulations*, U.S. Environmental Protection Agency.
6. 40 CFR 279. 2006. "Standards for Management of Used Oils." *Code of Federal Regulations*, U.S. Environmental Protection Agency.
7. 49 CFR 172. 2010. "Hazardous Materials Table, Special Provisions, Hazardous Materials Communications, Emergency Response Information, Training Requirements, and Security Plans." *Code of Federal Regulations*, U.S. Department of Transportation.
8. 49 CFR 173. 2010. Shippers-General Requirements for Shipments and Packagings. *Code of Federal Regulations*, U.S. Department of Transportation.
9. 49 CFR Part 177 - Carriage by Public Highway. *Code of Federal Regulations*, U.S. Department of Transportation.
10. 49 CFR Federal Motor Carrier Safety Regulations, *Code of Federal Regulations*, U.S. Department of Transportation.
11. WAC 173-303. 2004. "Dangerous Waste Regulations." *Washington Administrative Code*, Olympia, Washington.

12. WAC 173-350. 2005. "Minimum Functional Standards for Solid Waste Handling." *Washington Administrative Code*, Olympia, Washington.
13. WAC 173-400, 2009. "General Regulations for Air Pollution Sources." *Washington Administrative Code*, Olympia, Washington.
14. WAC 173-460. 2009. "Controls for New Sources of Toxic Air Pollutants." *Washington Administrative Code*, Olympia, Washington.
15. National Fire Protection Association (NFPA) 5000. 2006. Quincy, Massachusetts.
16. 16 USC 5A – Protection and Conservation of Wildlife
17. 16 USC 7 – Protection of Migratory Game and Insectivorous Birds
18. Title 42, Section 116, Emergency Planning and Community Right-to-Know Act

1.4 TRAINING

A. All contractor staff loading hazardous, dangerous, or radioactive wastes into Department of Transportation (DOT) specification packaging must be trained. Refer to Division 1 "Summary of Work" for requirements.

1.5 PERMITS

A. Identify and obtain all required permits, and submit any required notices, for Contractor activities in accordance with applicable federal, state, and local governing jurisdictions before any construction or demolition activities. Provide copies of permits and notices to the Battelle representative.

B. Conduct all work in accordance with requirements outlined in the issued permits and submitted notices.

C. Immediately report to Battelle any non-compliances or potential non-compliances with the issued permits or notices.

D. Immediately report any complaints by members of the public regarding air emissions to Battelle.

1.6 SUBMITTALS

A. For all work submit the following:

1. Submit for information to Battelle, upon Substantial Completion, estimated or actual total weights of demolition waste and recycled/reused materials. Submit using Battelle Construction & Demolition Waste-Recycling form.

B. When performing work requiring Erosion and Sediment Control: None

C. When performing Destabilization or other work requiring a Dust Control Plan: None

D. When performing Asbestos Abatement projects submit the following: None

E. When performing Demolition work submit the following:
   1. Submit for information to Battelle, no less than five (5) working days before performing the work the BCAA or ORCAA as applicable approved notice or permit. The notice or permit application shall be submitted to:
      a. Ecology (for work in the 300 Area) no less than ten (10) days before performing the work. File a Notification of Demolition and Renovation in accordance with https://www.ecfr.gov/cgi-bin/text-idx?SID=d1cb7551b7d66a7b8955d3fa83ae2c14&mc=true&node=sp40.9.61.m&rgn=div6#se40.10.61_1145 at 3100 Port of Benton Blvd., Richland, WA.

F. When performing work generating Other Regulated Waste other than Asbestos:

   1. Submit for information to Battelle, upon Substantial Completion, one (1) copy of waste disposal records for Other Regulated Waste.

G. When performing work generating Universal Waste:

   1. Submit for approval to Battelle, no less than five (5) working days after Award, the Contractor's proposed Universal Waste disposal site.
   2. Submit for information to Battelle, upon Substantial Completion, one (1) copy of the disposal records for Universal Waste.

H. When performing work with refrigerants:

   1. Submit for information to Battelle, no less than three (3) working days before performing the work, copies of all technicians EPA certification cards or wall certificates for contractor technicians working on all Battelle facilities. Provide copies of the certifications and the completed Contractor Technician form and Technician Input form, provided by Battelle. This applies to contractors who would perform new installations, demolition, replacements, conversions, and service contracts.
   2. Submit for information to Battelle, no less than three (3) working days before performing the work, documentation that the recovery equipment to be used for contaminated oil/refrigerant recovery has been certified by ARL/UL to meet EPA's minimum requirements for recycling and/or recovery.
   3. When removing contaminated oil or performing refrigerant recovery, document refrigerant removal and additions using the Service Order form and Appliance Input form. provided by Battelle. The completed form shall be submitted to Battelle as part of the project closeout records.

PART 2 - PRODUCT AND MATERIALS

2.1 REQUIREMENT FOR SUSTAINABLE GOODS AND SERVICES

A. Provide environmentally sustainable products in accordance with the General Provision Clause "Sustainable Acquisition Requirements." A request for an exception to the requirement to provide environmentally sustainable goods must be submitted and approved prior to installation.

2.2 SPILL KIT

A. Provide a spill kit at the job site to absorb spilled materials and properly manage spill-cleanup residues. At a minimum, the spill kit will contain the following items: an appropriately sized container with lid, a spill kit identification sign on the container, absorbent pads, absorbent containment pigs, absorbents, shovel, rags, gloves, and safety glasses.

2.3 HAZARDOUS MATERIAL STORAGE

A. Manage hazardous materials and chemical products at the project site in accordance with applicable federal, state, and local laws, manufacturer instructions, fire codes, and general safe practices to prevent accidental discharges to the environment. Close the container when not in use, use secondary containment when applicable, and store materials inside or under shelter. If material must be stored outside, then store in a manner to prevent releases and discharges to the environment.

2.4 Dust Suppressants – Chemical: None

PART 3 - EXECUTION

3.1 Excavation

A. Excavated earth may be placed back into the original excavations or used as fill onsite.

3.2 Cultural Resource Protection: None

3.3 Biological Resource Protection: None

3.4 Erosion and Sediment Control: None

3.5 Outside Dust Control: None

3.6 Groundwater Containment: None

3.7 Equipment Air Emissions

A. Comply with Ecology regulations applicable to the operation of non-road engines and portable and temporary sources of regulated air emissions.

3.8 Non-Hazardous Waste Accumulation

A. Accumulate non-hazardous waste in appropriate containers to prevent nuisance, contamination, dispersal by wind or precipitation, or visual blight.

B. Arrange for periodic collection of non-hazardous waste to prevent excessive accumulation.

C. Refer to Section 3.13, "Waste Minimization and Pollution Prevention," of this provision for management of recyclable material.

3.9 Hazardous Waste Accumulation and Inspection

A. Contact Battelle representative and obtain written approval before establishing an accumulation area for hazardous waste.

3.10 Waste Disposal

A. All hazardous wastes generated by the Subcontractors will be turned over to Battelle for subsequent disposal at Contractor expense, unless other arrangements are authorized in writing by Battelle in advance.

B. Recycle non-hazardous or non-dangerous waste or dispose of it in one of the following Battelle-approved landfills: City of Richland landfill in Richland, Washington (if meeting City of Richland Landfill's waste acceptance criteria); the Finley Buttes Regional Landfill located in Boardman, Oregon; the Roosevelt Landfill located in Roosevelt, Washington; the Waste Management landfill located in Medical Lake, Washington; or the Waste Management landfill located in Arlington, Oregon.

C. Dispose of Other Regulated Wastes only at Battelle approved locations.

D. No waste is to be disposed of on Battelle-owned, managed, or leased property unless directed within the contract documents or authorized in writing by Battelle.

E. All Universal Waste shall be managed by the Contractor in accordance with the requirements of WAC 173-303-573. Dispose of at Battelle approved site and ensure segregation from the municipal waste stream.

3.11 Spill Control and Management

A. Report, immediately, any spill or leaks of materials such as oil, fuel, solvents, paints, coolants, acids, caustics, and equipment leaks to the Battelle Construction Manager. Call 375-2400 if the Battelle Construction Manager is not immediately available. Stop work and contain spills to the extent possible without compromising personnel safety. At the earliest possible time report to Battelle the circumstances surrounding the spill event.

B. Prevent liquids such as gasoline, diesel fuel, lubricating oil, or antifreeze from entering the sanitary, process, or storm sewer systems, waterways, drainage ditches, or the ground. Where necessary, implement appropriate control measures, including, but not limited to, the use of physical barriers (plastic or tarps, berms, etc.), secondary containment, and/or absorbent materials to capture leaked or splattered contamination.

C. Waste from cleanup of spills may require being managed as a hazardous waste. The Battelle representative will make this determination.

1. All containerized hazardous cleanup waste will be turned over to Battelle for subsequent disposal at the Contractor's expense. (Note: Cleanup waste from a gasoline spill is an example of hazardous waste.)
2. The Contractor may dispose of non-hazardous or non-dangerous cleanup waste, as determined by Battelle, at one of the facilities listed in Section 3.8. (Note: Cleanup waste from a motor oil spill is an example of non-regulated waste.)

3.12 Liquid Effluent Management

A. Obtain prior written approval from Battelle for liquid effluent discharged to the ground, sanitary sewer, process sewer, storm sewer, or surface water.

B. Requirements for managing wastewater generated from concrete, asphalt, or saw-cutting and surfacing operations are provided below.

1. Concrete or Asphalt Wastewater:
   a. Wash out concrete truck chutes, pumps, and internals only into formed areas awaiting installation of concrete/asphalt or to lined areas designated for concrete rinseate.
   b. Return unused concrete remaining in the truck or in the pump to the originating batch plant for recycling. For smaller projects, reuse, recycle, or dispose of solidified concrete in a dumpster.
   c. Wash hand tools including, but not limited to, screeds, shovels, rakes, floats, trowels, and wheelbarrows only into formed areas awaiting installation of concrete/ asphalt or to lined areas designated for concrete rinseate.
   d. Wash equipment that cannot be easily moved, such as concrete pavers, only in areas that do not directly drain to natural or constructed storm-water conveyances.
   e. When no formed areas are available, contain the washwater and leftover product in a lined container. Dispose of contained concrete in a manner that does not violate groundwater or surface-water quality standards.
   f. Do not discharge directly onto the ground, to a storm sewer, surface water, or sanitary sewer.
2. Saw-cutting and Surfacing Operation:
   a. Collect material generated as part of a saw-cutting or surfacing operation and dispose of it in a Battelle-approved landfill (see Section 3.8). Saw-cutting and surfacing operations include, but are not limited to, sawing, coring, grinding, roughening, or hydro-demolition.
      1) Remove slurry and cuttings on the day they occur, as directed by the Battelle representative.

2) Do not drain slurry, cuttings, or process water to any natural or constructed drainage conveyance including storm sewers, catch basins, or other underground injection control wells, trenches, or ditches.
3) Collected slurry, cutting, or process water can also be placed in a "lined holding pond" for evaporation. Dispose of the dried material as instructed by the Battelle representative.
4) Handle and dispose of cleaning waste material and demolition debris in a manner that does not cause contamination of water.

3.13 Waste Minimization and Pollution Prevention Program

A. Examples of waste minimization and pollution prevention practices are provided below:

1. Material Substitution: Minimize the number of chemicals used to perform the same or similar tasks. Where practical, replace hazardous materials with non-hazardous or less hazardous substitutes.
2. Inventory Reduction: Minimize product inventory to reduce accumulation of partially used and unused materials requiring disposal. Remove partially used lots and unused materials from the worksite at contract completion.
3. Packaging: Minimize packaging brought on worksite. Whenever feasible, return empty containers to vendor.
4. Waste Segregation: Separate wastes to avoid creating additional wastes and mixtures that cannot be recycled, or that would be more difficult to manage.
5. Process Modification: Streamline processes for more efficient operation and less waste generation.

B. Collect, package, and transport recyclable items to an offsite processing facility. Typical recyclable items may include the following items:

1. Aluminum
2. Cardboard
3. Scrap metal
4. Empty Aerosol cans
5. Light Bulbs
6. Batteries
7. Scrap wood
8. Used oil
9. Concrete
10. Asphalt
11. Carpet
12. Shrubs and trees exceeding 2" caliper in size.

3.14 Other Regulated Waste: None

END OF SECTION 017600

SECTION 01 7800

COMPLETION, ACCEPTANCE AND CLOSEOUT

PART 1 - GENERAL

1.1 SUMMARY

A. This Section includes administrative and procedural requirements for completion, inspection and acceptance of the Work including contract closeout. The Acceptance of Completed Work (form) is used by Battelle to accomplish this phase of the Project.

1.2 SUBSTANTIAL COMPLETION

A. Work shall be substantially complete before requesting inspection for "Acceptance of Completed Work (ACW)". At a minimum, the following items should be complete before initiating request for acceptance by Battelle.

1. Prepare a list of items to be completed and/or corrected (Exceptions List aka. "punch list") per Section 1.6.
2. Obtain and submit releases permitting Battelle unrestricted use of the Work and access to services and utilities. City of Richland electrical power and water metering installation, operating certificates, and similar releases.
3. Building is energized and NEC inspection is approved and complete (submit report).
4. Access control systems installed; proximity card readers are working and temporary locks have been replaced with permanent locks.
5. Complete startup/testing of systems.
6. Submit test/adjust/balance records.
7. Building utility systems are ready for turnover to Battelle.

1.3 INSPECTION AND ACCEPTANCE (*Section 1 of ACW form*)

A. Contractor shall define the scope of Completed Work that the ACW will be applied to – Complete Scope or Partial Scope.

B. Request an inspection of the Completed Work with Battelle. On receipt of request, Battelle will either proceed with inspection or notify Contractor of unfulfilled requirements. If proceeding with inspection, Battelle and Contractor will perform a walk-down of the Work and agree on noted Exceptions List items.

C. Battelle will prepare the ACW and attach the Exceptions List after inspection is completed. Battelle will indicate on the ACW if the Work is 1) fully accepted without exceptions or, 2) that

acceptance is contingent upon the Contractor completing uncompleted or discrepant work noted on the Exceptions List. Acceptance is indicated on the ACW by Battelle personnel who have authority to accept the Work.

D. The Battelle Contract Specialist will issue the ACW to Contractor indicating Acceptance of Work.

1. Re-inspection: Request re-inspection(s) when the Work identified on the Exceptions List is completed or corrected. Battelle will update the List.

1.4 TRANSFER FOR BENEFICAL OCCUPANCY (*Section 2 of ACW form*)

A. Battelle, at their discretion, may elect to accept the Work and transfer from Contractor to Battelle for "Beneficial Occupancy". Battelle will indicate on the ACW if the Work is 1) fully accepted without exceptions or, 2) that acceptance is contingent upon the Contractor completing uncompleted or discrepant work noted on the Exceptions List. Acceptance is indicated on the ACW by Battelle personnel who have authority to accept the Work. By accepting the Work from the Contractor, Battelle assumes care, custody and control for the completed Work.

Note: The date noted on the ACW form for "Transfer" will initiate the start date for Warranties.

B. At a minimum, complete the following items for Beneficial Occupancy.

1. Access control is complete and functioning; deliver all keys to Battelle.
2. I.D. labels are installed at rooms, and on doors, equipment, valves, piping, panelboards, receptacles, etc. (See Reference Document ADM-CM-064, Equipment Identification and Labeling Requirements).
3. Successfully complete startup/testing of all equipment, systems and services, and submit final reports.
4. Commissioning is complete (report issued by Battelle).
5. Construction air filters are replaced with new permanent filters.
6. Complete Demonstration and Training per Section 3.1
7. Perform Final Cleaning per section 3.2.
8. Certification of Occupancy issued from Authority Having Jurisdiction (AHJ) (issued by Battelle Fire Protection Engineer).

1.5 FINAL ACCEPTANCE; CLOSEOUT OF EXCEPTIONS (*Section 3 of ACW form*)

A. Upon completion of all items on the Exceptions List, Battelle acknowledges from the Contractor Final Acceptance of the Work as follows: 1) fully accepted without exceptions or, 2) all exceptions removed (or resolved).

B. Before requesting Final Acceptance ensure the following items are complete:

1. Complete all items on the Exceptions List.
2. Submit Project Record Documents per Section 1.7.
3. Submit Warranties per Section 1.8.
4. Submit Record Drawings per section 2.1.
5. Submit Miscellaneous Records per Section 2.2.
6. Submit Operation, and Maintenance Manuals per Specification Section 017900.
7. Submit construction photographs, damage or settlement surveys, property surveys, and similar final record information.
8. Submit workmanship bonds, maintenance service agreements, final certifications, and similar documents.
9. Deliver tools, spare parts, extra materials, and similar items to location designated by Battelle. Label with manufacturer's name and model number where applicable.
10. Terminate and remove temporary facilities from Project site, along with mockups, construction tools, and similar elements.
11. Complete final cleaning requirements, including touchup painting. Repair and restore marred exposed finishes to eliminate visual defects.
12. Instruct Battelle’s personnel in operation, adjustment, and maintenance of products, equipment, and systems.

C. Inspection: Request final inspection for acceptance. On receipt of request, Battelle will either proceed with inspection or notify Contractor of unfulfilled requirements. Battelle will prepare a final Certificate for Payment after inspection or will notify Contractor of construction that must be completed or corrected before certificate will be issued.

1. Re-inspection: Request re-inspection when the Work identified in previous inspections as incomplete is completed or corrected.

1.6 EXCEPTIONS LIST/PUNCH LIST

A. Preparation: Submit list. Include name and identification of each space and area affected by construction operations for incomplete items and items needing correction including, if necessary, areas disturbed by Contractor that are outside the limits of construction.

1. Organize list of spaces in sequential order, starting with exterior areas first and proceeding from lowest floor to highest floor.
2. Organize items applying to each space by major element, including categories for ceiling, individual walls, floors, equipment, and building systems.
3. Include the following information at the top of each page:

   a. Project name.
   b. Date.
   c. Name of Contractor.
   d. Page number.

1.7 PROJECT RECORD DOCUMENTS

A. General: Do not use Project Record Documents for construction purposes. Protect Project Record Documents from deterioration and loss. Provide access to Project Record Documents for Battelle's reference during normal working hours.

B. Submittals:

1. Record Drawings: Submit one (1) set of marked-up Record Prints.
2. Record Specifications: Submit one (1) copy of Project's Specifications, including addenda and Contract Modifications.
3. Record Product Data: Submit one copy of each Product Data submittal.
   a. Where Record Product Data is required as part of operation and maintenance manuals, submit marked-up Product Data as an insert in the manual instead of submittal as Record Product Data.

1.8 WARRANTIES

A. Submit written warranties, using Primavera Unifier, prior to the Request for Final Acceptance or Transfer for Beneficial Occupancy. Organize warranty documents into an orderly sequence with a table of contents.

PART 2 - PRODUCTS

2.1 RECORD DRAWINGS

A. Record Prints: Maintain one set of black-line white prints of the Contract Drawings and Shop Drawings.

1. Preparation: Mark Record Prints to show the actual installation where installation varies from that shown originally.
   a. Give particular attention to information on concealed elements that would be difficult to identify or measure and record later.
   b. Record data as soon as possible after obtaining it. Record and check the markup before enclosing concealed installations.
2. Content: Types of items requiring marking include, but are not limited to, the following:
   a. Changes in dimensions or detail on Drawings.
   b. Locations and depths of underground and/or concealed utilities.
   c. Piping, duct and conduit routing.
   d. Revisions to electrical circuitry.
   e. Actual equipment locations.

3. Format:

   a. Mark the Contract Drawings or Shop Drawings, whichever is most capable of showing actual physical conditions, completely and accurately. If Shop Drawings are marked, show cross-reference on the Contract Drawings.
   b. Mark record sets with erasable, red-colored pencil. Use other colors to distinguish between changes for different categories of the Work at the same location.
   c. Note Change Order numbers, and similar identification, where applicable.

B. Format: Identify and date each Record Drawing; include the designation "PROJECT RECORD DRAWING" in a prominent location.

1. Record Prints: Organize Record Prints into manageable sets. Bind each set with durable paper cover sheets. Include identification on cover sheets.
2. Identification: As follows:

   a. Project name.
   b. Date.
   c. Designation "PROJECT RECORD DRAWINGS."
   d. Name of Contractor.

2.2 MISCELLANEOUS RECORD SUBMITTALS

A. Assemble miscellaneous records required by other Specification Sections for miscellaneous record keeping and submittal in connection with actual performance of the Work. Bind or file miscellaneous records and identify each, ready for continued use and reference.

PART 3 - EXECUTION

3.1 DEMONSTRATION AND TRAINING

A. Instruction: Instruct Battelle's personnel to adjust, operate, and maintain systems, subsystems, and equipment not part of a system.

1. Provide instructors experienced in operation and maintenance procedures, and qualified and competent to instruct in the operation and maintenance of the intended equipment.
2. Provide information and instruction concerning preventative maintenance for equipment during construction, and for equipment that requires seasonal operation.
3. Schedule training with Battelle with at least seven days' advance notice.

B. Program Structure: Develop an instruction program that includes individual training modules for each system and equipment not part of a system, as required by individual Specification Sections. Training shall include specific information and instruction concerning operation and preventative maintenance for equipment both during and after construction. For each training module, develop a learning objective and teaching outline. Include instruction for the following:

1. System design and operational philosophy.
2. Review of documentation.
3. Operations, Adjustments, Troubleshooting, Maintenance and Repair.

3.2 FINAL CLEANING

A. General: Provide final cleaning. Conduct cleaning and waste-removal operations to comply with local laws and ordinances and Federal and local environmental and antipollution regulations.

B. Cleaning: Employ experienced workers or professional cleaners for final cleaning. Clean each surface or unit to condition expected in an average commercial building cleaning and maintenance program. Comply with manufacturers written instructions.

1. Complete the following cleaning operations before requesting inspection for certification of Substantial Completion for entire Project or for a portion of Project:

a. Clean Project site, yard, and grounds, in areas disturbed by construction activities, including landscape development areas, of rubbish, waste material, litter, and other foreign substances.

1) Sweep paved areas broom clean. Remove petrochemical spills, stains, and other foreign deposits.
2) Rake grounds that are neither planted nor paved to a smooth, even-textured surface.
3) Remove tools, construction equipment, machinery, and surplus material from Project site.

b. Remove debris and surface dust from limited access spaces, including roofs, plenums, shafts, trenches, equipment vaults, manholes, attics, and similar spaces. Sweep concrete floors broom clean in unoccupied spaces.

c. Clean exposed surfaces and finishes (exterior and interior) to a dirt-free condition, free of stains, films, and similar foreign substances. Avoid disturbing natural weathering of exterior surfaces. Restore reflective surfaces to their original condition.

1) Vacuum carpet and similar soft surfaces, removing debris and excess nap; shampoo if visible soil or stains remain.
2) Clean transparent materials, including mirrors and glass in doors and windows. Remove glazing compounds and other noticeable, vision-obscuring materials. Replace chipped or broken glass and other damaged transparent materials. Polish mirrors and glass, taking care not to scratch surfaces.
3) Touch up and otherwise repair and restore marred, exposed finishes and surfaces. Replace finishes and surfaces that cannot be satisfactorily repaired or restored or that already show evidence of repair or restoration. Do not paint over "UL" and similar labels, including mechanical and electrical nameplates.

4) Wipe surfaces of mechanical and electrical equipment, and similar equipment. Remove excess lubrication, paint and mortar droppings, and other foreign substances.

d. Clean plumbing, filters, ducts and fixtures

1) Clean plumbing fixtures to a sanitary condition, free of stains, including stains resulting from water exposure.
2) Replace disposable air filters and clean permanent air filters. Clean exposed surfaces of diffusers, registers, and grills.
3) Clean ducts, blowers, and coils if units were operated without filters during construction.
4) Clean light fixtures, lamps, globes, and reflectors to function with full efficiency. Replace burned-out bulbs, and those noticeably dimmed by hours of use, and defective and noisy starters in fluorescent and mercury vapor fixtures to comply with requirements for new fixtures.

C. Comply with safety standards for cleaning. Do not burn waste materials. Do not bury debris or excess materials on Battelle's property. Do not discharge volatile, harmful, or dangerous materials into drainage systems. Remove waste materials from Project site and dispose of lawfully.

3.3 RECORDING AND MAINTENANCE

A. Recording: Maintain one copy of each submittal during the construction period for Project Record Document purposes. Post changes and modifications to Project Record Documents as they occur; do not wait until the end of Project.

B. Maintenance of Record Documents and Samples: Store Record Documents and Samples in the field office apart from the Contract Documents used for construction. Do not use Project Record Documents for construction purposes. Maintain Record Documents in good order and in a clean, dry, legible condition, protected from deterioration and loss. Provide access to Project Record Documents for Battelle reference during normal working hours.

END OF SECTION 01 7800

SECTION 017900

VENDOR INFORMATION

PART 1 - GENERAL

1.1 SUMMARY

This Section includes administrative and procedural requirements for preparing project Vendor Information Manuals. Each manual shall include product data, operating and maintenance information, inspection reports, and test reports.

1.2 SUBMITTALS

Submit one (1) preliminary copy of the Vendor Information Manual(s) in final form at least seven (7) calendar days before the date of Substantial Completion Inspection. Within seven (7) calendar days of receipt of Battelle's comments, submit one (1) final copy of the corrected Vendor Information Manual(s).

PART 2 - PRODUCTS

2.1 MANUAL CONTENTS

A. The Vendor Information Manual shall contain the following:

1. Title page
2. Table of contents
3. Manual contents to include final approved Product Data and Shop Drawing submittals for each discipline (Civil, Mechanical, and Electrical), approved calculations, Equipment Operation Information, Equipment Maintenance Information, Warranties, Inspection Records, Test Reports, and Project Record Documentation.

B. Title Page: Include the following information:

1. Title is to be Vendor Information Manual
2. Contract Number
3. Project name/description
4. Date of submittal
5. Name, address, and telephone number of Contractor

C. Table of Contents: Provide a comprehensive table of contents. Organize the Manual by CSI division.

2.2 PRODUCT DATA

A. All previously submitted and approved Product Data and Shop Drawings shall be included in the Vendor Information Manuals.

2.3 CALCULATIONS

A. All previously submitted and approved calculations shall be included in the Vendor Information Manuals.

2.4 EQUIPMENT OPERATION INFORMATION

A. Content: In addition to requirements in this Section, include the following information:

1. Equipment descriptions
2. Operating standards
3. Operating procedures
4. Wiring diagrams
5. Control diagrams
6. Piped system diagrams
7. Precautions against improper use
8. License requirements including inspection and renewal dates

B. Descriptions: Include the following:

1. Product name and model number
2. Manufacturer's name
3. Equipment identification with serial number of each component
4. Equipment function
5. Operating characteristics
6. Limiting conditions
7. Performance curves
8. Engineering data and tests
9. Complete nomenclature and number of replacement parts

C. Operating Procedures: Include the following, as applicable:

1. Startup procedures
2. Equipment or system break-in procedures
3. Routine and normal operating instructions
4. Regulation and control procedures
5. Instructions on stopping
6. Normal shutdown instructions
7. Seasonal and weekend operating instructions
8. Required sequences for electric or electronic systems
9. Special operating instructions and procedures

D. Equipment Controls: Describe the sequence of operation, and diagram controls as installed.

2.5 EQUIPMENT MAINTENANCE INFORMATION

A. Content: For each piece of equipment include source information, manufacturers' maintenance documentation, maintenance procedures, maintenance and service schedules, spare parts list and source information, maintenance service contracts, and warranty and bond information, as described below.

B. Manufacturers' Maintenance Documentation: Manufacturers' maintenance documentation including the following information for each component part or piece of equipment:

1. Standard maintenance instructions and bulletins.
2. Drawings, diagrams, and instructions required for maintenance, including disassembly and component removal, replacement, and assembly.
3. Identification and nomenclature of parts and components.
4. List of items recommended to be stocked as spare parts.

C. Maintenance Procedures: Include the following information and items that detail essential maintenance procedures:

1. Test and inspection instructions.
2. Troubleshooting guide.
3. Precautions against improper maintenance.
4. Disassembly; component removal, repair, and replacement; and reassembly instructions.
5. Aligning, adjusting, and checking instructions.

D. Maintenance and Service Schedules: Include service and lubrication requirements, list of required lubricants for equipment, and separate schedules for preventive and routine maintenance and service with standard time allotment.

1. Scheduled Maintenance and Service: Tabulate actions for daily, weekly, monthly, quarterly, semiannual, and annual frequencies.
2. Maintenance and Service Record: Include manufacturers' forms for recording maintenance.

E. Spare Parts List and Source Information: Include lists of replacement and repair parts, with parts identified and cross-referenced to manufacturers' maintenance documentation and local sources of maintenance materials and related services.

2.6 WARRANTIES

A. All warranty certificates specified by the Contract shall be included in the Vendor Information Manual.

2.7 INSPECTION AND TEST REPORTS

A. Records of each inspection and test performed by the Contractor shall be included in the Vendor Information Manual

B. PROJECT RECORD DOCUMENTS

C. All previously submitted and approved red-line drawing and specification markups shall be included in the Vendor Information Manual.

PART 3 - EXECUTION

3.1 MANUAL PREPARATION

A. Assemble the Vendor Information Manual in Adobe Portable Document Format (PDF).

B. Organize the Manual logically and insert navigation bookmarks identifying the contents as as listed within Part 2 of this specification section.

C. Ensure scanned documents are legible and automatically searchable through the use of optical character recognition (OCR) prior to submittal.

END OF SECTION 017900

PROJECT #S804449

3410 CUP
CHILLER #5 INSTALLATION

Pacific Northwest NATIONAL LABORATORY

SHEET INDEX

GENERAL

G0-001	TITLE SHEET
G0-002	SPECIFICATIONS
G0-003	SPECIFICATIONS
G0-004	SPECIFICATIONS
G0-005	SPECIFICATIONS

MECHANICAL

M1-101	PLAN
M6-101	SCHEDULES AND DETAILS
M7-101	CONTROLS

ELECTRICAL

D1-101	DEMOLITION PLAN
E1-101	INSTALLATION PLAN
E6-101	ONE-LINE DIAGRAM

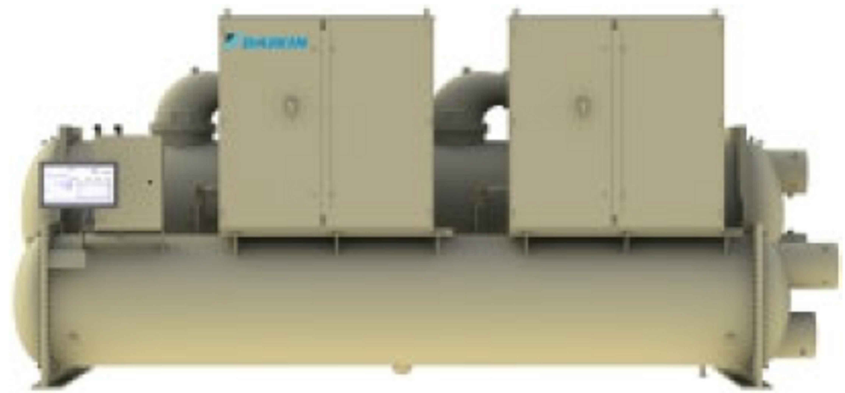

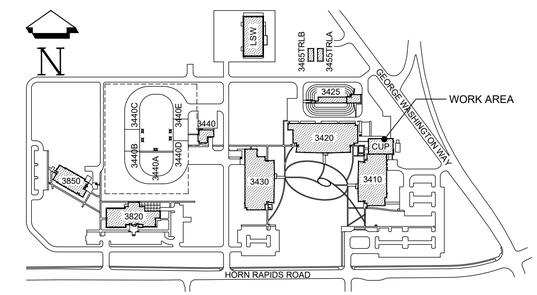

SITE PLAN

SCALE: NONE

ABBREVIATIONS

(NOT ALL LISTED APPLY TO PROJECT)

AFF	ABOVE FINISHED FLOOR	RED	REDUCER
AO	ANALOG OUTPUT	REF	REFERENCE
ASME	AMERICAN SOCIETY OF MECHANICAL ENGINEERS	REV	REVISION
ASTM	AMERICAN SOCIETY FOR TESTING MATERIALS	RV	RELIEF VALVE
A.K.A	ALSO KNOWN AS	RMC	RICHLAND MUNICIPAL CODE
BLDG	BUILDING	SAN	SANITARY SEWER
BFCI	BATTELLE FURNISHED CONTRACTOR INSTALLED	SATC	SUSPENDED ACOUSTIC TILE CEILING
BFP	BACKFLOW PREVENTER	SMR	SURFACE METAL RACEWAY
CH-XXX	CHILLER	SST	STAINLESS STEEL
CHWR	CHILLED WATER RETURN	SCW	SANITARY COLD WATER
CHWS	CHILLED WATER SUPPLY	STR	STRAINER
COND	CONDENSER	SRV	SAFETY RELIEF VALVE
CWS	COLD WATER SUPPLY	TYP	TYPICAL
CWR	COLD WATER RETURN	VFD	VARIABLE FREQUENCY DRIVE
CUP	CENTRAL UTILITY PLANT	VLV	VALVE
DI	DIGITAL INPUT		
DO	DIGITAL OUTPUT		
ECC	ECCENTRIC		
EVAP	EVAPORATOR		
EXST	EXISTING		
FE	FLOW ELEMENT		
FDM	FIRE DATA MODULE		
FMCS	FACILITY MANAGEMENT CONTROL SYSTEM		
FM	FLOW METER		
FS	FLOW SWITCH		
GA	GAUGE		
GND	GROUND		
GWB	GYPSUM WALL BOARD		
HDPE	HIGH DENSITY POLYETHYLENE		
HSS	HIGH STRENGTH STEEL		
HM	HOLLOW METAL		
MIN	MINIMUM		
NFPA	NATIONAL FIRE PROTECTION ASSOCIATION		
O/C	ON CENTER		
PCW	PROCESS COLD WATER		
PIV	POST INDICATING VALVE		

GENERAL SYMBOLS LEGEND

	BALL VALVE		CHECK VALVE
	CONNECT TO EXISTING		BUTTERFLY VALVE
	DUPLEX RECEPTACLE		EXPANSION JOINT
	DEMOLITION	FS	FLOW SWITCH
	DIRECTION OF FLOW	PI	PRESSURE INDICATOR
	DISCONNECT BOX	TI XXX	TEMPERATURE INDICATOR
	EXISTING	TW	TEMPERATURE WELL
	ELECTRICAL PANEL	SRV-X XXX	SAFETY RELIEF VALVE
FS	FLOW SWITCH	XX XXX	EQUIPMENT TAG
	GAUGE	HOSE	STRAINER W/ VALVE AND HOSE BIB
J	JUNCTION BOX		
$	LIGHT SWITCH		
LT	LOW TEMPERATURE SWITCH		
	LATERAL SEISMIC RESTRAINT		
	LINE CAPPED		
	PROJECT WORK		
	PIPE DOWN		
	PRESSURE REGULATING VALVE		
XXX	ROOM NUMBER		
#	SHEET NOTE		
	SAFETY RELIEF VALVE		
	STRAINER		
TS	TAMPER SWITCH		
	VALVE		

PROJECT INFORMATION

PROJECT DESCRIPTION:
INSTALLATION OF CHILLER #5

PROJECT ADDRESS:
622 HORN RAPIDS ROAD, RICHLAND, WA 99352

OWNER INFORMATION:
OWNER: DEPARTMENT OF ENERGY/BATTELLE
CONTACT: JEFF PITTMAN
CAMPUS PLANNING AND PROJECTS
FACILITIES AND OPERATIONS
902 BATTELLE BOULEVARD
P.O. BOX 999, MSIN J2-33
PHONE: (509) 371-7056

LIFE SAFETY AND CODE SUMMARY

APPLICABLE CODES:	2015 INTERNATIONAL MECHANICAL CODE 2015 INTERNATIONAL PLUMBING CODE 2020 NFPA 70, NATIONAL ELECTRICAL CODE (NEC) 2016 NFPA 72, NATIONAL FIRE ALARM AND SIGNALING CODE ASME B31.9
ZONING:	PNNL SITE, FEDERAL PROPERTY
OCCUPANCY TYPE:	N/A
FIRE PROTECTION:	N/A

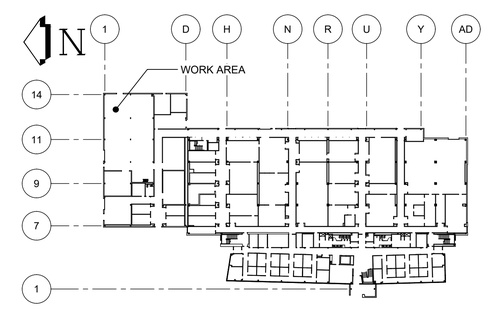

FIRST FLOOR KEY PLAN

SCALE: NONE

APPROVAL DATE 02/10/2021

REVISIONS DESCRIPTION

DOCUMENT NO S804449-G0-001		SERVICE REQUEST NO S804449
CURRENT REVISION	ORIGINAL	U. S. DEPARTMENT OF ENERGY PACIFIC NORTHWEST SITE OFFICE
DRAWN CA HUGHES	DRAWN CA HUGHES	Pacific Northwest Division — Battelle — Richland, Washington 99352
CHECKED JM SCOTT	CHECKED JM SCOTT	GENERAL CHILLER #5 INSTALLATION TITLE SHEET
DRAFTING CHECKER GT KIRK	DRAFTING CHECKER GT KIRK	
ENGINEER CA HUGHES	ENGINEER CA HUGHES	
APVD DJ DE SMET	APVD DJ DE SMET	
OTHER	OTHER	PROJ TITLE: 3410 CHILLER #5 INSTALLATION
OTHER	OTHER	SIZE D — BLDG 3410 — DWG NO G0-001 — REV NO 0
		SCALE SHOWN — SHEET 1 OF 1

PNNL-BATT_D [REV1 8-19-14]

PLOT NAME: S804449-G0-001.dwg
PLOT DATE: 2/10/21 4:19pm
PLOT BY: HUGHES, CHRISTOPHER A

SPECIFICATIONS
(UNLESS OTHERWISE NOTED)

DIVISION 03 - CONCRETE

030500 BASIC CONCRETE MATERIALS AND METHODS

1. ALL CONCRETE WORK SHALL BE IN ACCORDANCE WITH ACI-318 "BUILDING CODE REQUIREMENTS FOR REINFORCED CONCRETE, " ACI-301 "SPECIFICATION FOR STRUCTURAL CONCRETE FOR BUILDINGS," AND ACI-315 "MANUAL OF STANDARD PRACTICE FOR DETAILING REINFORCED CONCRETE STRUCTURES."

2. CONCRETE SHALL BE POURED AGAINST UNDISTURBED SUBGRADE.

3. CONCRETE MIX SHALL BE IN ACCORDANCE WITH ASTM C94, ACHIEVE A MINIMUM COMPRESSIVE STRENGTH OF 4000 PSI @ 28 DAYS, CONTAIN MINIMUM OF 15% FLY ASH BY WEIGHT OF CEMENT, 4" - 6" SLUMP MAXIMUM, AND 3/4" MAXIMUM AGGREGATE. SUBMIT FOR APPROVAL - CONCRETE MIX DESIGN.

4. HORIZONTAL CONCRETE SURFACES SHALL HAVE A SMOOTH STEEL TROWELED FINISH. VERTICAL SURFACES SHALL BE FORM FINISHED WITH ALL VOIDS AND FORM TIE IRREGULARITIES REPAIRED.

5. REINFORCING STEEL BARS SHALL BE DEFORMED AND IN CONFORMANCE WITH ASTM A615, GRADE 40.

6. EXPANSION JOINTS: W.R. MEADOWS CERAMAR FLEXIBLE CLOSED CELL FOAM FILLER, 1" X FULL DEPTH OF POUR. SET FILLER 1/4" - 1/2" BELOW SURFACE OF CONCRETE AND PROVIDE MASTERSEAL NP-1, SINGLE COMPONENT, POLYURETHANE SEALANT TOPPING. TOOL JOINT SMOOTH AND FLUSH WITH ADJACENT CONCRETE.

036200 - NON-SHRINK GROUT

1. CONTROLLED, NET POSITIVE EXPANSION, NON-SHRINK, NON-METALLIC/NON-CORROSIVE, POURABLE, PUMPABLE OR DRY PACK CONSISTENCY, INTERIOR/EXTERIOR COMPLIANT, CRD-C 621 GRADES A, B, C, ASTM C-1107 GRADES A, B, C, ASTM-C827 - DAYTON SUPERIOR 1107 ADVANTAGE GROUT.

DIVISION 20 - GENERAL MECHANICAL

200500 COMMON MECHANICAL WORK REQUIREMENTS

1. GENERAL

1.1. THIS SECTION APPLIES TO WORK OF DIVISIONS 20 AND 23.

1.2. INSPECTION: VERIFY INSTALLATION CONDITIONS AS SATISFACTORY TO RECEIVE WORK. DO NOT START WORK UNTIL UNSATISFACTORY CONDITIONS ARE CORRECTED. BEGINNING WORK CONSTITUTES ACCEPTANCE OF CONDITIONS AS SATISFACTORY.

1.3. MECHANICAL DRAWINGS SHALL SERVE AS WORKING DRAWINGS FOR DIVISION 20 AND 23 WORK, BUT THE CONTRACTOR SHALL REFER TO ELECTRICAL DRAWINGS FOR ADDITIONAL DETAIL EFFECTING THE INSTALLATION OF WORK.

1.4. INTENT AND INTERPRETATION

1.4.1. THE DRAWINGS ARE PARTLY DIAGRAMMATIC AND DO NOT SHOW THE EXACT LOCATION OF PROJECT WORK. EXACT LOCATIONS ARE TO BE DETERMINED BY ACTUAL MEASUREMENTS AT THE PROJECT, PRIOR TO COMMENCING WORK, AND WILL BE SUBJECT TO BATTELLE'S APPROVAL.

1.4.2. PIPING DIAGRAMS ARE SCHEMATIC ONLY AND DO NOT SHOW THE PHYSICAL ARRANGEMENT OF THE EQUIPMENT. THEY SHALL NOT BE USED FOR OBTAINING MATERIAL QUANTITIES OR LINEAL RUNS OF PIPING OR OTHER WORK.

1.4.3. THE CONTRACTOR IS RESPONSIBLE FOR PROVIDING OFFSETS, TRANSITIONS, AND FITTINGS AS REQUIRED AND TO ROUTE MECHANICAL WORK AROUND OBSTRUCTIONS.

1.5. PROTECT SURROUNDING AREAS, SURFACES, AND EQUIPMENT TO PRECLUDE DAMAGE FROM WORK OF ALL DIVISIONS AND SECTIONS.

1.6. COORDINATION AND COOPERATION:

1.6.1. THE CONTRACTOR SHALL COORDINATE WITH THE WORK OF TRADES INVOLVED ON THE PROJECT. REFER TO THE OTHER BUILDING DRAWINGS FOR ADDITIONAL BUILDING DETAILS NECESSARY FOR PROPER WORK COORDINATION. PROTECT SURROUNDING AREAS, SURFACES, AND EQUIPMENT TO PRECLUDE DAMAGE FROM WORK OF DIVISION 23 SECTIONS.

1.7. WELDING

1.7.1. CARBON STEEL SHAPES AND PLATES: PROCESSES AND WELDERS SHALL BE QUALIFIED IN ACCORDANCE WITH AWS D1.1. FABRICATE PER AWS D1.1, STATICALLY LOADED.

1.7.2. CARBON STEEL PIPE AND FITTINGS: PROCESSES AND WELDERS SHALL BE QUALIFIED IN ACCORDANCE WITH ASME SECTION IX. FABRICATE PER ASME B31.9.

1.7.3. SUBMIT WELDING PROCEDURES AND WELDER QUALIFICATIONS FOR APPROVAL.

1.8. ABBREVIATIONS ARE IN ACCORDANCE WITH ASME Y14.38-1999.

2. PRODUCTS - NOT USED

3. EXECUTION

3.1. SERVICEABILITY AND ACCESSIBILITY OF PRODUCTS:

3.1.1. PROVIDE WORK AND EQUIPMENT WITH THE PROPER ORIENTATION OF SERVICEABLE COMPONENTS TO ACCESS SPACE PROVIDED.

3.2. COORDINATE INSTALLATION OF PIPING, EQUIPMENT, SYSTEMS COMPONENTS, AND OTHER PRODUCTS TO ALLOW PROPER SERVICE OF ITEMS REQUIRING MAINTENANCE OR REPLACEMENT.

3.3. START-UP & DEMONSTRATION: PREPARE, START, AND DEMONSTRATE THAT MECHANICAL SYSTEMS OPERATE AND FUNCTION AS DESIGNED AND IN ACCORDANCE WITH THE MANUFACTURER'S RECOMMENDATIONS. PROVIDE MINIMUM ONE WEEK PRIOR NOTICE TO BATTELLE CONSTRUCTION MANAGER FOR SCHEDULING DEMONSTRATIONS. PERFORM DEMONSTRATIONS IN THE PRESENCE OF THE BATTELLE ENGINEER. PROVIDE INSTRUMENTS AND PERSONNEL AS REQUIRED TO CONDUCT DEMONSTRATION AND START-UP TO BATTELLE'S SATISFACTION.

3.4. INSTALL WORK AND EQUIPMENT WITH THE PROPER ORIENTATION OF SERVICEABLE COMPONENTS TO ALLOW PROPER SERVICE.

3.5. GENERAL PIPING REQUIREMENTS

3.5.1. FABRICATE, WELD, AND INSPECT PER THE SPECIFIED CODE(S) IN THE APPLICABLE SECTION(S) OF DIVISION 23.

3.5.2. PIPE JOINT CONSTRUCTION: JOIN PIPE AND FITTINGS PER THE FOLLOWING REQUIREMENTS AND APPLICABLE CODES.

3.5.2.1. REAM ENDS OF PIPE AND TUBES AND REMOVE BURRS. BEVEL PLAIN ENDS OF STEEL PIPE.

3.5.2.2. DISINFECT/FLUSH: REMOVE SCALE, SLAG, DIRT AND DEBRIS FROM INSIDE AND OUTSIDE OF PIPE AND FITTINGS PRIOR TO ASSEMBLY. USE A NON-FOAMING LIQUID DETERGENT DISPERSANT CLEANER TO REMOVE OIL AND FOREIGN MATERIAL FROM THE PIPING AND EQUIPMENT PRIOR TO THE FINAL FILLING OF THE SYSTEMS. USE 50 PPM NALCO 7465 ANTIFOAM AND 25 PPM NALCO 7308 CLEANING AGENT, OR APPROVED EQUAL THAT IS NOT INJURIOUS TO PERSONS OR DAMAGING TO PIPING, PIPE JOINT COMPOUNDS, PACKING, COILS, VALVES, PUMPS AND THEIR MECHANICAL SEALS, TUBES, GASKETS, OR OTHER PARTS OF THE SYSTEM.

3.5.3. WELDED JOINTS: CONSTRUCT JOINTS IN ACCORDANCE WITH ASME B31.9. WELDING FILLER METALS PER REFERENCED STANDARDS.

3.5.4. FLANGED JOINTS: SELECT APPROPRIATE NON-ASBESTOS GASKET MATERIAL, SIZE, TYPE AND THICKNESS BASED ON FLUID, PRESSURE AND TEMPERATURE REQUIREMENTS. INSTALL GASKET CONCENTRICALLY POSITIONED. USE SUITABLE LUBRICANTS ON BOLT THREADS.

3.5.5. MECHANICAL FITTINGS: INSTALL PER APPLICABLE CODE OR MANUFACTURER'S INSTRUCTIONS.

3.6. CLEAN SCRATCHED OR MARRED FACTORY FINISHED AND PAINTED SURFACES OF RUST OR OTHER FOREIGN MATTER AND PAINT WITH MATCHING COLOR OF INDUSTRIAL ENAMEL OR MANUFACTURER SUPPLIED PAINT.

3.7. THOROUGHLY CLEAN MECHANICAL EQUIPMENT AND PIPING OF STAMPINGS, MARKINGS, IRON CUTTINGS, AND OTHER DETRITUS. CAREFULLY CAP PIPING DURING CONSTRUCTION WHEN CONSTRUCTION ACTIVITIES ARE NOT UNDERWAY.

3.8. PAINTING: FINISH FERROUS PIPING, SUPPORTS, MATERIALS, DEVICES, APPURTENANCES AND CONSTRUCTION WITH TWO COATS OF ENAMEL TO MATCH ADJACENT MECHANICAL PIPING.

3.9. LEAK AND PRESSURE TESTING:

3.9.1. FLUSH SYSTEM PRIOR TO TEST: PIPING SHALL BE FLUSHED WITH WATER. FLUSH PIPING SYSTEMS UNTIL CLEAN AND FREE OF ALL PARTICULATE MATTER.

3.9.2. TESTING SHALL BE DONE BEFORE INSULATION IS INSTALLED ON PIPE AND EQUIPMENT OR THE PIPING OR EQUIPMENT IS OTHERWISE OBSTRUCTED TO DETERMINE IF THE TEST IS SUCCESSFUL.

3.9.3. EACH JOINT SHALL BE VISUALLY INSPECTED TO HAVE NO LEAKS DURING TESTING UNLESS SPECIFICALLY EXEMPTED BY THE PROJECT DRAWINGS OR APPLICABLE CODE.

3.9.4. LEAKS SHALL BE REPAIRED AND RETESTED UNTIL PIPE SYSTEM CAN PASS THE HYDROSTATIC TEST. SYSTEMS THAT FAIL MORE THAN ONE TEST SHALL BE REPORTED TO THE BATTELLE CONSTRUCTION MANAGER.

200523 GENERAL DUTY MECHANICAL VALVES

1. GENERAL

1.1. SUBMITTALS: PRODUCT DATA FOR EACH TYPE OF VALVE INDICATED.

2. PRODUCTS

2.1. ISOLATION VALVES (2" AND SMALLER): SST, BRASS, OR BRONZE TWO PIECE BODY, SST OR CHROME PLATED BRASS BALL, FULL PORT, PTFE SEATS AND STUFFING BOX, INDEPENDENT PACKING NUT, LOCKABLE LEVER HANDLE EXTENDED FOR ACCOMMODATION OF INSULATION, THREADED OR PRESS-FIT ENDS, 600 WOG, 150 SWP.

2.2. ISOLATION VALVES (2 1/2" AND LARGER): BUTTERFLY TYPE PER MSS SP-67, CAST IRON BODY OR SST BODY, STAINLESS STEEL STEM AND DISC, FULL LUG STYLE, LEVER ACTUATOR (FOR SIZES 2-1/2" TO 4") OR GEAR TYPE ACTUATOR (FOR SIZES OVER 4"), BI-DIRECTIONAL DEAD END SERVICE TO 200 PSIG, BUBBLE-TIGHT SHUTOFF FLANGED ENDS. PROVIDE WITH CHAIN WHEEL OPERATOR FOR VALVES LOCATED 8 FEET OR HIGHER ABOVE FINISHED FLOOR.

2.3. CHECK VALVES: SEE 232113 HYDRONIC PIPING

2.4. DRAIN VALVES: SEE 232113 HYDRONIC PIPING

2.5. MANUFACTURERS: MILWAUKEE VALVE CO, VIEGA, HAMMOND VALVE CO, NIBCO, OR APPROVED EQUAL.

3. EXECUTION - NOT USED

(CONTINUED ON G0-003)

REVISIONS DESCRIPTION

APPROVAL DATE 02/10/2021

DOCUMENT NO S804449-G0-002		SERVICE REQUEST NO S804449
CURRENT REVISION	ORIGINAL	U. S. DEPARTMENT OF ENERGY PACIFIC NORTHWEST SITE OFFICE
DRAWN CA HUGHES	DRAWN CA HUGHES	Pacific Northwest Division — Battelle — Richland, Washington 99352
CHECKED JM SCOTT	CHECKED JM SCOTT	GENERAL CHILLER #5 INSTALLATION SPECIFICATIONS
DRAFTING CHECKER GT KIRK	DRAFTING CHECKER GT KIRK	
ENGINEER CA HUGHES	ENGINEER CA HUGHES	
APVD DJ DE SMET	APVD DJ DE SMET	PROJ TITLE 3410 CHILLER #5 INSTALLATION
OTHER	OTHER	SIZE D — BLDG 3410 — DWG NO G0-002 — REV NO 0
OTHER	OTHER	SCALE NONE — SHEET 1 OF 1

PLOT NAME: S804449-G0-002.dwg
PLOT DATE: 2/10/21 4:15pm
PLOT BY: HUGHES, CHRISTOPHER A

PNNL-BATT_D [REV1 8-19-14]

SPECIFICATIONS

(CONTINUED FROM G0-002)

200529 HANGARS AND SUPPORTS FOR MECHANICAL PIPING, DUCTS AND EQUIPMENT

1. GENERAL

1.1. SUBMITTALS: PRODUCT DATA FOR EACH TYPE OF PRODUCT USED.

2. PRODUCTS

2.1. METAL PIPE HANGERS AND SUPPORTS: CARBON STEEL OR STAINLESS STEEL PER MSS SP-58, FACTORY FABRICATED.

2.2. METAL FRAMING SYSTEMS: 1-5/8" SLOTTED 12-GAUGE STEEL CHANNEL WITH INTURNED EDGES PER MFMA-4, STEEL NUTS OR OTHER DEVICES DESIGNED TO FIT INTO CHANNEL SLOT, CONTINUOUS THREAD HANGER ROD, ELECTROPLATED ZINC COATING. MANUFACTURERS: UNISTRUT, COOPER B-LINE, ERICO OR APPROVED EQUAL.

3. EXECUTION

3.1. FABRICATE AND INSTALL PIPING AND TUBING IN ACCORDANCE WITH ASME B31.9 AS APPLICABLE. SUPPORT PIPING FROM PRIMARY STRUCTURAL MEMBERS, BEAMS, JOISTS, OR PROVIDE INTERMEDIATE SUPPORTING MEMBERS BETWEEN JOISTS OR BEAMS. PROVIDE ADDITIONAL STRUCTURAL STEEL ANGLES, CHANNELS, FRAMING CHANNELS OR OTHER INTERMEDIATE STRUCTURAL ELEMENTS REQUIRED TO SUPPORT OR HANG PIPING CAPABLE OF WITHSTANDING THE LOADS REQUIRED BY THE APPLICABLE CODE. REUSE EXISTING, WHERE POSSIBLE. FASTENING TO METAL DECK IS PROHIBITED.

3.2. PROVIDE PIPE SUPPORTS AND HANGERS AS REQUIRED. SUPPORT PIPING AT EACH CHANGE IN DIRECTION, ON EITHER SIDE OF CONTROL VALVES AND PUMPS, AT EQUIPMENT CONNECTIONS, AND AT WALL PENETRATIONS SO THAT PIPING IS INDEPENDENTLY SUPPORTED. HANGERS SHALL BE DESIGNED, MANUFACTURED AND INSTALLED IN ACCORDANCE WITH MSS SP-58. SUPPORT PIPES WITH 3/8" ROD, MINIMUM.

3.3. PROVIDE PIPE RACKS, PIPE STANDS, TRAPEZE HANGERS, ETC. AS REQUIRED. PROVIDE ADJUSTABLE HANGERS COMPLETE WITH INSERTS, ADJUSTERS, BOLTS, NUTS, SWIVELS, ALL-THREAD RODS, ETC. FOR PIPING SYSTEMS. DO NOT USE WIRE OR PERFORATED METAL TO SUPPORT PIPING.

3.4. SUPPORT PIPING AND EQUIPMENT PER SMACNA "SEISMIC RESTRAINTS MANUAL: GUIDELINES FOR MECHANICAL SYSTEMS", 3RD EDITION.

3.5. MAXIMUM SUPPORT SPACING, STEEL PIPING: 12 FEET.

200553 IDENTIFICATION FOR MECHANICAL PIPING AND EQUIPMENT

1. GENERAL

1.1. PIPING IDENTIFICATION SHALL CONFORM TO ADM-064 (ELECTRONIC COPY AVAILABLE ON REQUEST).

1.2. COORDINATE WITH BATTELLE CONSTRUCTION MANAGER FOR ASSET NUMBER ASSIGNMENTS FOR VALVES AND EQUIPMENT.

1.3. SUBMITTALS:
- 1.3.1. PRODUCT DATA FOR EACH TYPE OF LABEL INDICATED.
- 1.3.2. VALVE SCHEDULE: PROVIDE FOR EACH PIPING SYSTEM.

2. PRODUCTS

2.1. MANUFACTURED PIPE MARKERS: PRE-PRINTED, COLOR-CODED, WITH LETTERING INDICATING SERVICE AND DIRECTION OF FLOW.

2.2. PIPE WITH OD, INCLUDING INSULATION, LESS THAN 3/4-INCH: SELF-ADHESIVE VINYL TAPE.

2.3. PIPE WITH OD, INCLUDING INSULATION, GREATER THAN 3/4-INCH TO 6-INCH: PRECOILED SEMIRIGID PLASTIC FORMED TO COVER FULL CIRCUMFERENCE OF PIPE AND TO ATTACH TO PIPE WITHOUT ADHESIVE.

2.4. DIRECTIONAL ARROWS: INTEGRAL WITH PIPING SYSTEM SERVICE LETTERING OR AS SEPARATE UNIT ON EACH PIPE MARKER TO INDICATE DIRECTION OF FLOW.

2.5. COLORS: GREEN BACKGROUND WITH WHITE LETTERS.

2.6. VALVE/COMPONENT LABELS: 1" X 2", 18 GAUGE BRASS, SHAPE RECTANGLE, HOLE SIZE 1/8", GRAINGER STOCK #1F039. LETTERING SHALL BE ENGRAVED OR STAMPED, 3/8" LETTERING HEIGHT. SECURE TAG TO VALVE WITH BRASS CHAIN.
- 2.6.1. DATA: ALPHANUMERIC IDENTIFIER.
- 2.6.2. LETTERING: 1/2-INCH HELVETICA.
- 2.6.3. SIZE: 1-INCH X 3-INCH.
- 2.6.4. COLOR TO MATCH APPLICABLE CONNECTING PIPING COLOR SCHEME.

2.7. EQUIPMENT LABELS: SELF-ADHESIVE VINYL TAPE, FOR PERMANENT ATTACHMENT ON EQUIPMENT. IF THERE IS NOT ADEQUATE FLAT SPACE ON EQUIPMENT FOR ATTACHMENT OF LABEL, PROVIDE A 0.032-INCH THICK ALUMINUM BACKING PLATE FOR LABEL.
- 2.7.1. DATA: ALPHANUMERIC IDENTIFIER OR NOUN DESCRIPTION.
- 2.7.2. LETTERING: 1/2-INCH HELVETICA.
- 2.7.3. SIZE: 4-INCH X 4-1/2-INCH,
- 2.7.4. COLORS: GREEN BACKGROUND WITH WHITE LETTERS.

3. EXECUTION

3.1. PIPE LABEL INSTALLATION: LOCATE PIPE LABELS, WITH FLOW INDICATION ARROWS SHOWING DIRECTION OF FLOW, ON EACH PIPING SYSTEM AS FOLLOWS:
- 3.1.1. NEAR MAJOR EQUIPMENT ITEMS AND OTHER POINTS OF ORIGIN AND TERMINATION.
- 3.1.2. SPACED AT MAXIMUM INTERVALS OF 15 FEET ALONG EACH RUN.

3.2. VALVE TAG INSTALLATION: INSTALL TAGS ON VALVES AS INDICATED ON THE DRAWINGS OR PER BATTELLE CONSTRUCTION MANAGER.

3.3. EQUIPMENT LABELS: INSTALL LABELS ON OR NEAR EACH PIECE OF MAJOR MECHANICAL EQUIPMENT AT ACCESSIBLE AND VISIBLE LOCATION.

200700 MECHANICAL INSULATION

1. GENERAL

1.1. SUBMITTALS: PRODUCT DATA FOR EACH TYPE OF MATERIAL INDICATED.

2. PRODUCTS

2.1. PIPE INSULATION: 850ºF SNAP-ON FIBERGLASS, WITH A FACTORY APPLIED VAPOR RETARDER ALL SERVICE JACKET AND SELF-SEALING LAP. UL LISTED WITH A FLAME SPREAD/SMOKE DEVELOPMENT OF 25/50 OR LESS IN ACCORDANCE WITH ASTM E84. MANUFACTURERS: JOHNS-MANVILLE MICRO-LOK, CERTAINTEED, KNAUF, OR APPROVED EQUAL.

2.2. INSULATED PIPE SADDLES: “COOLDRY” INSULATED SADDLE, RIGID PHENOLIC FOAM INSULATION ASTM E-84 25-50 FLAME/SMOKE RATED, -290°F TO +250°F APPLICATION RANGE, ZERO PERM RATED ASTM E-96 VAPOR BARRIER, SEAL AIR TIGHT ON CHILLED WATER SYSTEMS.

2.3. VAPOR BARRIER COMPOUND: WATER BASED. FIRE RESISTANT AS RECOMMENDED BY INSULATION MANUFACTURER. MAINTAIN A CONTINUOUS VAPOR BARRIER OVER ENTIRE LENGTH OF PIPING.

2.4. REMOVABLE INSULATION PADS: WOVEN FIBERGLASS JACKETING AROUND 2" THICK FIBERGLASS BATT TYPE INSULATION. USE STAINLESS STEEL LACING HOOKS AND WIRE.

2.5. PVC JACKET: HIGH-IMPACT, UV RESISTANT PVC PER ASTM D1784, 20 MILS THICK; ROLL STOCK READY FOR SHOP OR FIELD CUTTING AND FORMING. ADHESIVE AS RECOMMENDED BY INSULATION MANUFACTURER.

2.6. PVC FITTING COVERS: FACTORY FABRICATED, 20-MIL THICK, HIGH IMPACT, ULTRAVIOLET RESISTANT PVC. ADHESIVE AS RECOMMENDED BY INSULATION MANUFACTURER.

3. EXECUTION

3.1. APPLY INSULATION CONTINUOUSLY THROUGH HANGERS. INSTALL INSULATED PIPE SADDLES AT HANGERS AND SUPPORTS.

3.2. INSULATE FITTINGS, VALVES AND STRAINERS USING PRE-FORMED FITTING INSULATION.

3.3. INSTALL REMOVABLE INSULATION PADS AT VALVES, STRAINERS AND OTHER EQUIPMENT WHERE STANDARD INSULATION IS IMPRACTICAL.

3.4. INSULATE MECHANICAL JOINTS USING A SECTION OF OVERSIZED, PRE-FORMED PIPE INSULATION. OVERLAP ADJOINING INSULATION BY NOT LESS THAN 2X THE THICKNESS OF THE INSULATION.

3.5. INSTALLATION OF INSERTS AND SHIELDS:
- 3.5.1. APPLICATION: PIPING 1-1/2" DIAMETER AND LARGER.
- 3.5.2. INSERT LOCATION: BETWEEN SUPPORT SHIELD AND PIPING AND UNDER THE FINISH JACKET.
- 3.5.3. INSERT CONFIGURATION: MINIMUM 8" LONG, 1/2 THE OUTSIDE CIRCUMFERENCE OF THE PIPE INSULATION, OF SAME THICKNESS AND CONTOUR AS ADJOINING INSULATION; MAY BE FACTORY FABRICATED.

3.6. PIPING INSULATION SCHEDULE
- 3.6.1. CHILLED WATER: 1 INCH THICK.

3.7. FIELD-APPLIED JACKET SCHEDULE
- 3.7.1. INSTALL PVC JACKET ON EXPOSED PIPING LOCATED INDOORS.

DIVISION 23 - HEATING VENTILATION, AND AIR CONDITIONING

230500 COMMON WORK RESULTS FOR HVAC

1. GENERAL

1.1. SEE 200500.
1.2. HANGERS: CONFORM TO 200529.
1.3. LEAK TESTING: SEE 200500.

2. PRODUCTS - NOT USED

3. EXECUTION

3.1. TEST PERFORMANCE: AS IDENTIFIED IN THE INDIVIDUAL DIVISION 23 SECTIONS.

3.2. FIELD INSPECTIONS: VERIFY CORRECT LABELING FOR EACH FLUID TRANSFER LINE.

3.3. INSTALL SUPPORTS FOR VERTICAL PIPING EVERY 10 FEET.

3.4. CONNECTIONS: DRAWINGS INDICATE GENERAL ARRANGEMENT OF PIPING, FITTINGS, AND SPECIALTIES. INSTALL PIPING ADJACENT TO SPECIALTIES AND EQUIPMENT TO ALLOW SERVICE AND MAINTENANCE.

3.5. TEST CERTIFICATION: CERTIFY THAT SPECIFIED TESTS, INSPECTIONS, AND PROCEDURES HAVE BEEN PERFORMED AND CERTIFY REPORT RESULTS. INCLUDE:
- 3.5.1. THE INSPECTION PERFORMED.
- 3.5.2. PROCEDURES, MATERIALS, AND FLUID USED.
- 3.5.3. TEST METHOD USED.
- 3.5.4. RESULT OF TEST.

230548 VIBRATION AND SEISMIC CONTROL FOR MECHANICAL EQUIPMENT

1. GENERAL

1.1. SUBMITTALS: PRODUCT DATA FOR EACH TYPE OF PRODUCT USED.

2. PRODUCTS

2.1. ALL VIBRATION-ISOLATION MOUNTS SHALL BE SUPPLIED BY ONE OF THE FOLLOWING APPROVED MANUFACTURERS:
- 2.1.1. MASON INDUSTRIES INC. (M.I.), HAUPPAUGE, NEW YORK.
- 2.1.2. KINETICS NOISE CONTROL INC. (K.N.C.), DUBLIN, OHIO.
- 2.1.3. VIBRATION MOUNTINGS & CONTROLS, INC. (V.M.C.), BLOOMINGDALE, NJ.

2.2. VIBRATION ISOLATORS FOR PUMPS:
- 2.2.1. GENERAL:
  - 2.2.1.1. METAL PARTS OF VIBRATION-ISOLATION UNITS SHALL BE AS FOLLOWS: GALVANIZING SHALL MEET ASTM SALT SPRAY TEST STANDARDS AND FEDERAL TEST STANDARD NO. 14.
    - 2.2.1.1.1. HOUSING: HOT-DIPPED GALVANIZED OR FUSION EPOXY COATED.
    - 2.2.1.1.2. HARDWARE (WASHERS, NUTS, BOLTS, ETC.): CADMIUM PLATED.
    - 2.2.1.1.3. SPRINGS SHALL BE NEOPRENE COATED.
  - 2.2.1.2. ALL ISOLATORS INSTALLED OUTDOORS SHALL HAVE BASE PLATES WITH BOLT HOLES FOR FASTENING THE ISOLATORS TO THE SUPPORT MEMBERS.
  - 2.2.1.3. ISOLATOR TYPES ARE SCHEDULED TO ESTABLISH MINIMUM STANDARDS. AT THE SUBCONTRACTOR'S OPTION, LABORSAVING ACCESSORIES CAN BE AN INTEGRAL PART OF ISOLATORS SUPPLIED TO PROVIDE INITIAL LIFT OF EQUIPMENT TO OPERATING HEIGHT, HOLD PIPING AT FIXED ELEVATION DURING INSTALLATION AND INITIAL SYSTEM FILLING OPERATIONS, AND SIMILAR INSTALLATION ADVANTAGES. ACCESSORIES SHALL NOT DEGRADE THE VIBRATIONISOLATION SYSTEM.
  - 2.2.1.4. STATIC DEFLECTION OF ISOLATORS SHALL BE AS INDICATED IN TABLE 23 0550, VIBRATION ISOLATION SCHEDULE. ALL STATIC DEFLECTIONS STATED ARE THE MINIMUM ACCEPTABLE DEFLECTION FOR THE MOUNTS UNDER ACTUAL LOAD.
  - 2.2.1.5. ENSURE THAT EQUIPMENT SUPPORT STRUCTURE HAS NO FUNDAMENTAL RESONANCE FREQUENCY WITHIN PLUS OR MINUS 40 PERCENT OF EQUIPMENT OPERATING SPEEDS.
  - 2.2.1.6. ENSURE NO METAL-TO-METAL CONTACT OCCURS BETWEEN FIXED AND FLOATING COMPONENTS.
  - 2.2.1.7. PROVIDE HEAT SHIELDS FOR ELASTOMERIC COMPONENTS SUBJECT TO DEFORMATION AND DETERIORATION WHEN EXPOSED TO HIGH TEMPERATURE.
  - 2.2.1.8. ISOLATED EQUIPMENT OFTEN HAS NON-UNIFORM LOAD DISTRIBUTION. ENSURE THAT APPROPRIATELY SIZED ISOLATORS ARE SELECTED TO PROVIDE UNIFORM DEFLECTION MEETING THE MINIMUM STATIC DEFLECTIONS PROVIDED IN THE ISOLATION SCHEDULE GIVEN AT THE END OF THIS SECTION.
- 2.2.2. FLOOR SPRING AND NEOPRENE FOR PUMPS:
  - 2.2.2.1. SPRING ISOLATORS SHALL BE HIGH-DEFLECTION, FREESTANDING, AND LATERALLY STABLE WITHOUT ANY HOUSING. SPRING ISOLATORS SHALL BE ASSEMBLED INTO THE UPPER LOAD PLATE AND LEVELING ASSEMBLY AND INTO THE LOWER LOAD PLATE AND NOISE ISOLATION PAD ASSEMBLY.
  - 2.2.2.2. SPRING DIAMETER SHALL BE AT LEAST 0.8 TIMES THE COMPRESSED HEIGHT OF THE SPRING AT THE DESIGN LOAD. SPRINGS SHALL HAVE A MINIMUM ADDITIONAL TRAVEL TO SOLID EQUAL TO 50 PERCENT OF THE ACTUAL DEFLECTION.
  - 2.2.2.3. SPRINGS SHALL BE DESIGNED SUCH THAT THE LATERAL STIFFNESS IS APPROXIMATELY EQUAL TO THE VERTICAL STIFFNESS.
  - 2.2.2.4. NOISE ISOLATION PADS SHALL BE OF RIBBED NEOPRENE.
  - 2.2.2.5. THE SPRING ELEMENT IN THE ISOLATOR SHALL EITHER BE SET IN:
    - 2.2.2.5.1. A NEOPRENE CUP WITH A STEEL WASHER TO DISTRIBUTE THE LOAD EVENLY OVER THE NEOPRENE, OR A UNIT DNP ISOLATOR.
    - 2.2.2.5.2 IF THE DNP ISOLATOR IS USED, A RECTANGULAR BEARING PLATE OF APPROPRIATE SIZE SHALL BE PROVIDED SUCH THAT THE PAD IS UNIFORMLY LOADED IN THE RANGE OF 40 TO 50 PSI (275 TO 345 KPA). IF THE SPRING ISOLATOR IS SUPPLIED WITH A NEOPRENE FRICTION PAD, A STAINLESS STEEL, ALUMINUM, OR GALVANIZED STEEL PLATE SHALL BE USED BETWEEN THE FRICTION PAD AND THE DNP ISOLATOR. THE DNP ISOLATOR, SEPARATOR PLATE, AND FRICTION PAD SHALL BE PERMANENTLY ADHERED TO ONE ANOTHER AND TO THE BOTTOM OF THE BEARING PLATE.
  - 2.2.2.6. IF THE ISOLATOR IS TO BE FASTENED TO THE BUILDING STRUCTURE AND A UNIT DNP ISOLATOR IS USED UNDER THE BEARING PLATE, NEOPRENE GROMMETS SHALL BE PROVIDED FOR EACH BOLT HOLE IN THE BASE PLATE. BOLT HOLES SHALL BE PROPERLY SIZED TO ALLOW FOR GROMMETS. HOLD DOWN BOLT ASSEMBLY SHALL INCLUDE WASHERS TO DISTRIBUTE LOAD EVENLY TO THE GROMMET. BOLTS AND WASHERS SHALL BE GALVANIZED.
  - 2.2.2.7. FOR CAPACITIES LESS THAN 6,000 POUNDS (2700 KG), PROVIDE FORMED STEEL LOAD PLATES THAT ALLOW CLIP-IN ATTACHMENT OF SPRINGS. FOR CAPACITIES OVER 6000 LBS (2700 KG), WELD SPRINGS TO LOAD PLATE ASSEMBLIES.
  - 2.2.2.8. ISOLATOR SHALL BE ONE OF THE FOLLOWING PRODUCTS, ORAPPROVED EQUAL, WITH THE APPROPRIATE NEOPRENE PAD (IF USED) SELECTED FROM UNIT DNP:
    - 2.2.2.8.1. TYPE SLF: M.I.
    - 2.2.2.8.2. TYPE FDS: K.N.C.
    - 2.2.2.8.3. TYPE AC OR AD: V.M.C.

2.3. INERTIA BASE FOR PUMPS:

2.3.1. CONCRETE INERTIA BASES SHALL BE FORMED OF STONE-AGGREGATE CONCRETE (150 POUNDS PER CUBIC FT. OR 2382 KG/M3) AND APPROPRIATE STEEL REINFORCING CAST BETWEEN PERIMETER STRUCTURAL STEEL CHANNELS. INERTIA BASES SHALL BE BUILT TO FORM A RIGID BASE THAT WILL NOT TWIST, DEFORM, OR DEFLECT, IN ANY MANNER THAT WOULD NEGATIVELY AFFECT THE OPERATION OF THE SUPPORTED EQUIPMENT OR THE VIBRATION ISOLATION INERTIA BASES SHALL BE ADEQUATELY SIZED TO SUPPORT BASIC EQUIPMENT UNITS AND MOTORS PLUS ANY ASSOCIATED PIPE ELBOW SUPPORTS, DUCT ELBOW SUPPORTS, ELECTRICAL CONTROL ELEMENTS, OR OTHER COMPONENTS CLOSELY RELATED AND REQUIRING RESILIENT SUPPORT IN ORDER TO PREVENT VIBRATION TRANSFER TO THE BUILDING STRUCTURE. INERTIA BASE DEPTH SHALL BE AT LEAST 1/12 THE LONGEST DIMENSION OF THE INERTIA BASE BUT NOT LESS THAN 6 INCHES AND NOT MORE THAN 12 INCHES (300MM). THE WEIGHT OF THE INERTIA BASE, AS A MINIMUM, SHALL BE 1 TO 2 TIMES THAT OF THE TOTAL WEIGHT OF THE EQUIPMENT (INCLUDING THE ATTACHED PIPING IT IS SUPPORTING AND OTHER APPLICABLE LOADS). IN SPECIAL APPLICATIONS SUCH AS RECIPROCATING COMPRESSORS, THE INERTIA BASE WEIGHT REQUIREMENT COULD BE HIGHER AND SHALL BE CALCULATED ON A CASE-BY-CASE BASIS. INERTIA BASES SHALL INCLUDE SIDE MOUNTED BRACKETS FOR ATTACHMENT TO VIBRATION ISOLATORS. MOUNTING BRACKETS SHALL BE LOCATED ON THE SIDES OF THE BASE THAT ARE PARALLEL TO THE AXIS OF ROTATION OF THE SUPPORTED EQUIPMENT.

2.3.2. THE STEEL FRAME AND REINFORCEMENT SHALL BE SUPPLIED BY THE VIBRATION ISOLATOR MANUFACTURER. CONCRETE SHALL BE PROVIDED BY THE APPROPRIATE SUBCONTRACTOR.

2.3.3. INERTIA BASES USED TO SUPPORT VIBRATION-ISOLATED PUMPS SHALL BE SIZED TO PROVIDE SUPPORT FOR PIPE ELBOWS AND SUCTION DIFFUSER. INERTIA BASES USED TO SUPPORT VANEAXIAL FANS SHALL BE LONG ENOUGH TO SUPPORT FAN DIFFUSION CONES.

2.3.4. FRAME AND REINFORCEMENT FOR UNIT BIB BASES SHALL BE ONE OF THE FOLLOWING PRODUCTS OR APPROVED EQUAL:
- 2.3.4.1. TYPE KSL: M.I.
- 2.3.4.2. TYPE CIB-L OR CIB-H: K.N.C.
- 2.3.4.3. TYPE WPF: V.M.C.

2.4. SNUBBERS

2.4.1. SNUBBERS TO LIMIT THE VERTICAL AND HORIZONTAL MOTION OF THE ISOLATED EQUIPMENT SHALL BE FABRICATED FROM A NEOPRENE PAD, 1/4-INCH (6MM) MINIMUM THICKNESS, SHALL BE AFFIXED AT THE POINT OF CONTACT.

2.4.2. THERE WILL BE NO CONTACT BETWEEN SNUBBERS AND THE INERTIA BASE OR EQUIPMENT SUPPORT FRAME DURING NORMAL OPERATION. MINIMUM OF ONE SNUBBER PER SIDE, FOUR TOTAL, SHALL BE REQUIRED ON EACH BASE. SEISMIC SNUBBERS SHALL MEET SEISMIC REQUIREMENTS DEFINED IN OTHER STANDARD SPECIFICATION SECTIONS. SNUBBERS SHALL NOT BE FULLY INSTALLED UNTIL VIBRATION ISOLATORS ARE IN PLACE AND ADJUSTED WITH ACTUAL OPERATING LOADS.

3. EXECUTION

3.1. INSTALL VIBRATION ISOLATORS AS INDICATED AND IN ACCORDANCE WITH THE MANUFACTURER'S INSTRUCTIONS.

(CONTINUED ON G0-004)

APPROVAL DATE 02/10/2021

REVISIONS DESCRIPTION

DOCUMENT NO S804449-G0-003		SERVICE REQUEST NO S804449
CURRENT REVISION	ORIGINAL	U. S. DEPARTMENT OF ENERGY PACIFIC NORTHWEST SITE OFFICE
DRAWN CA HUGHES	DRAWN CA HUGHES	Pacific Northwest Division — Battelle — Richland, Washington 99352
CHECKED JM SCOTT	CHECKED JM SCOTT	GENERAL CHILLER #5 INSTALLATION SPECIFICATIONS
DRAFTING CHECKER GT KIRK	DRAFTING CHECKER GT KIRK	
ENGINEER CA HUGHES	ENGINEER CA HUGHES	
APVD DJ DE SMET	APVD DJ DE SMET	PROJ TITLE 3410 CHILLER #5 INSTALLATION
OTHER	OTHER	SIZE D — BLDG 3410 — DWG NO G0-003 — REV NO 0
OTHER	OTHER	SCALE NONE — SHEET 1 OF 1

PLOT NAME: S804449-G0-003.dwg
PLOT DATE: 2/10/2021 4:29pm
PLOT BY: HUGHES, CHRISTOPHER A.

SPECIFICATIONS

(CONTINUED FROM G0-003)

230800 TESTING AND BALANCING

1. GENERAL

1.1. ENGAGE THE SERVICES OF AN INDEPENDENT TESTING AND BALANCING AGENCY, CERTIFIED BY THE ASSOCIATED AIR BALANCE COUNCIL (AABC) OR THE NATIONAL ENVIRONMENTAL BALANCING BUREAU (NEBB) TO TEST AND BALANCE THE MECHANICAL SYSTEMS.

1.2. PERFORM FUNCTIONAL TESTING OF PROJECT EQUIPMENT AND/OR CONTROL SYSTEMS. DOCUMENT TESTING ON FORMS PROVIDED BY BATTELLE.

1.3. SUBMITTALS

1.3.1. TAB AGENCY QUALIFICATIONS.
1.3.2. TAB AGENCY TEST FORMS AND TEST PLAN
1.3.3. CERTIFIED TEST AND BALANCE REPORT.

2. PRODUCTS - NOT USED

3. EXECUTION

3.1. COMPLETE WATER BALANCING AFTER HYDRONIC INSTALLATION AND CONSTRUCTION IS COMPLETE. SET AND ADJUST VALVES TO ACHIEVE SPECIFIED MINIMUM AND MAXIMUM FLOW RATES THROUGH CHILLER CH-005.

230900 INSTRUMENTATION AND CONTROL FOR HVAC

1. GENERAL

1.1. SUMMARY: FURNISH LABOR, MATERIALS, EQUIPMENT, SOFTWARE, PROGRAMMING, SERVICE AND TRAINING NECESSARY FOR COMPLETE AND FULLY OPERATIONAL CONTROLS FOR INSTALLED EQUIPMENT. INTEGRATE CONTROLS WITH THE EXISTING JOHNSON CONTROLS INC. METASYS FMCS CONTROL SYSTEM.

1.2. SUBMITTALS

1.2.1. PRODUCT DATA: INCLUDE MANUFACTURER'S TECHNICAL LITERATURE FOR EACH CONTROL DEVICE. INDICATE DIMENSIONS, CAPACITIES, PERFORMANCE CHARACTERISTICS, ELECTRICAL CHARACTERISTICS, AND INSTALLATION AND STARTUP INSTRUCTIONS FOR EACH TYPE OF PRODUCT INDICATED.

1.2.3. SHOP DRAWINGS: INCLUDE SYSTEM ARCHITECTURE DIAGRAM, EQUIPMENT SCHEDULES, AND SYSTEM CONTROL DRAWINGS.

1.2.4. FUNCTIONAL PERFORMANCE TESTING PLAN:

1.2.4.1. SUBMIT A TESTING PLAN FOR FOR START-UP AND FUNCTIONAL TESTING TO DEMONSTRATE INSTALLATION IS COMPLETE AND COMPONENTS PERFORM AS SPECIFIED. PLAN SHALL BE APPROVED PRIOR TO IMPLEMENTATION.
1.2.4.2. AFTER SUCCESSFUL TESTING, SUBMIT COMPLETED TEST REPORT.

1.2.5. AS-BUILT DRAWINGS: UPDATE SHOP DRAWINGS TO REFLECT ANY CHANGES DURING CONSTRUCTION.

1.2.6. OPERATION AND MAINTENANCE DATA: FOR HVAC INSTRUMENTATION AND CONTROL SYSTEM TO INCLUDE IN OPERATION AND MAINTENANCE MANUAL.

2. PRODUCTS

2.1. APPROVED MANUFACTURERS:
2.1.1. PROGRAMMABLE APPLICATION CONTROLLERS: JOHNSON CONTROLS, INC.
2.1.2. SENSORS AND CURRENT SWITCHES: JOHNSON CONTROLS, INC., BAPI, AUTOMATION COMPONENTS, INC.

2.2. PROGRAMMABLE APPLICATION CONTROLLERS
2.2.1. APPROVED MANUFACTURER: JOHNSON CONTROLS FIELD APPLICATION CONTROLLERS (FAC), INPUT/OUTPUT MODULES (IOM)

2.3. TEMPERATURE SENSORS, SINGLE-POINT IMMERSION TYPE (LIQUIDS)
2.3.1. TEMPERATURE RANGE: -5 TO 275 DEG F, WITH ACCURACY OF ± 0.5 DEG F.
2.3.2. PROBE: SINGLE-POINT SENSOR WITH A STAINLESS-STEEL SHEATH.
2.3.3. LENGTH: AS REQUIRED BY APPLICATION TO ACHIEVE TIP AT MIDPOINT.
2.3.4. ENCLOSURE: JUNCTION BOX WITH REMOVABLE COVER; NEMA 250, TYPE 1 FOR INDOOR APPLICATIONS AND TYPE 4 FOR OUTDOOR APPLICATIONS.
2.3.5. GASKET FOR ATTACHMENT TO EQUIPMENT TO SEAL CONNECTION AIRTIGHT.

2.4. THERMOWELLS: SERIES 300 THREADED STAINLESS STEEL, INSIDE DIAMETER AND INSERTION LENGTH SHALL BE AS REQUIRED FOR THE APPLICATION.

2.5. LIQUID-PRESSURE DIFFERENTIAL TRANSMITTER WITH FIELD-SELECTABLE RANGE

2.5.1. PERFORMANCE
2.5.1.1. FIELD-SELECTABLE RANGE: 5, 10, 25, 50 PSIG.
2.5.1.2. FIELD-SELECTABLE UNIDIRECTIONAL OR BIDIRECTIONAL RANGE.
2.5.1.3. ACCURACY: WITHIN 1 PERCENT OF THE FULL-SCALE RANGE, EXCEPT LOWEST SELECTABLE RANGE WITHIN 2 PERCENT.
2.5.1.4. STABILITY: WITHIN 0.5 PERCENT OF SPAN PER YEAR.
2.5.1.5. PRESSURE: MAXIMUM OPERATING PRESSURE EQUAL TO HIGHEST PRESSURE IN RANGE.
2.5.1.6. OVERPRESSURE: PROOF PRESSURE 2.2 TIMES FULL SCALE; BURST PRESSURE 40 TIMES FULL SCALE.
2.5.1.7. TEMPERATURE LIMITS: -44 TO 185 DEG F.
2.5.1.8. COMPENSATE TEMPERATURE LIMITS: 32 TO 130 DEG F.
2.5.1.9. THERMAL EFFECTS: 2 PERCENT OF FULL SCALE PER 100 DEG F.
2.5.1.10. RESPONSE TIME: FIELD SELECTABLE FROM 1 TO 5 SECONDS.
2.5.1.11. SHOCK AND VIBRATION SHALL NOT HARM THE TRANSMITTER.

2.5.2. OUTPUT SIGNALS
2.5.2.1. CONFIGURABLE ANALOG OUTPUT CURRENT SIGNAL: TWO-WIRE, 4- TO 20-MA DC CURRENT SOURCE.
2.5.2.2. CONFIGURABLE ANALOG OUTPUT VOLTAGE SIGNALS: THREE WIRE, 0-10 V.
2.5.3. DISPLAY: FOUR-DIGIT LCD WITH MINIMUM 0.4-INCH-HIGH NUMERIC CHARACTERS.
2.5.4. OPERATOR INTERFACE: DIGITAL ZERO BUTTON LOCATED BEHIND COVER. RANGE SELECTOR LOCATED BEHIND COVER.
2.5.5. CONSTRUCTION
2.5.5.1. CAST-ALUMINUM ENCLOSURE WITH REMOVABLE COVER.
2.5.5.2. WETTED PARTS OF TRANSMITTER CONSTRUCTED OF 17-4 PH STAINLESS STEEL.
2.5.5.3. THREADED, NPS 1/8 PROCESS CONNECTIONS ON BOTTOM OF INSTRUMENT ENCLOSURE.
2.5.5.4. 1/2-INCH TRADE SIZE CONNECTION FOR CONDUIT ON BOTTOM OF INSTRUMENT ENCLOSURE.
2.5.5.5. SCREW TERMINAL BLOCK FOR WIRE CONNECTIONS.
2.5.5.6. VERTICAL PLANE MOUNTING.

2.6. CURRENT SWITCHES: SELF-POWERED, SOLID-STATE WITH ADJUSTABLE CONTROLS FOR PICKUP AND DROPOUT CURRENT, SELECTED TO MATCH CURRENT AND SYSTEM OUTPUT REQUIREMENTS, SPLIT-CORE DESIGN.

3. EXECUTION

3.1. EXAMINATION

3.1.2. THOROUGHLY EXAMINE THE DRAWINGS FOR CONTROL DEVICE AND EQUIPMENT LOCATIONS. REPORT ANY DISCREPANCIES, CONFLICTS, OR OMISSIONS TO BATTELLE FOR RESOLUTION BEFORE STARTING ROUGH-IN WORK.

3.1.3. INSPECT THE SITE TO VERIFY THAT EQUIPMENT MAY BE INSTALLED AS SHOWN. REPORT ANY DISCREPANCIES, CONFLICTS, OR OMISSIONS TO BATTELLE FOR RESOLUTION BEFORE STARTING ROUGH-IN WORK.

3.2. CONNECT AND CONFIGURE EQUIPMENT AND SOFTWARE TO ACHIEVE SEQUENCE OF OPERATION SPECIFIED.

3.3. INSTALL LABELS AND NAMEPLATES TO IDENTIFY CONTROL COMPONENTS IN ACCORDANCE WITH SECTION 200553 "IDENTIFICATION FOR HVAC PIPING AND EQUIPMENT."

3.4. INSTALL INSTRUMENT WELLS AND ACCESSORIES FOR CONTROL SENSORS UNDER SECTION 232113 "HYDRONIC PIPING."

3.5. SENSORS:

3.5.1. INSTALL INPUT AND OUTPUT DEVICES IN ACCORDANCE WITH THE MANUFACTURER'S RECOMMENDATIONS.

3.5.2. MOUNT SENSORS RIGIDLY AND ADEQUATELY FOR THE ENVIRONMENT WITHIN WHICH THE SENSOR OPERATES.

3.5.3. WIRES ATTACHED TO SENSORS SHALL BE AIR SEALED IN THEIR RACEWAYS OR IN THE WALL TO STOP AIR TRANSMITTED FROM OTHER AREAS AFFECTING SENSOR READINGS.

3.5.4. PIPE-MOUNTED TEMPERATURE SENSORS SHALL BE INSTALLED IN WELLS. INSTALL LIQUID TEMPERATURE SENSORS WITH HEAT-CONDUCTING FLUID IN THE THERMAL WELLS.

3.6. ELECTRICAL WIRING AND CONNECTION INSTALLATION: CONTROL CABINETS (ENCLOSURES), RACEWAYS AND BOXES, BUILDING WIRE AND CABLE, AND SIGNAL AND COMMUNICATION CABLE SHALL BE PROVIDED BY THE DIVISION 26 CONTRACTOR.ELECTRICAL WIRING AND CONNECTION INSTALLATION

3.7. BACNET NETWORK MANAGEMENT: COORDINATE WITH BATTELLE FOR UNIQUE NAMING AND ADDRESSING FOR NETWORKS AND DEVICES, FOR POINT NAME AND ALARM TEXT REQUIREMENTS, FOR ADX AND FACILITY CODES, AND FOR LIST OF ALLOWED AND REQUIRED ABBREVIATIONS.

3.8. COMMUNICATION INTERFACE

3.8.1. FMCS SHALL HAVE A COMMUNICATION INTERFACE WITH EQUIPMENT SUCH AS VARIABLE FREQUENCY DRIVES HAVING INTEGRAL CONTROLS AND HAVING A COMMUNICATION INTERFACE FOR REMOTE MONITORING OR CONTROL.

3.8.2. COORDINATE WITH BATTELLE DURING SUBMITTAL PROCESS THE POINTS REQUIRED TO BE MAPPED FROM COMMUNICATION INTERFACE.

3.9. FIELD QUALITY CONTROL

3.9.1. ENGAGE A FACTORY-AUTHORIZED SERVICE REPRESENTATIVE TO INSPECT, TEST, AND ADJUST FIELD-ASSEMBLED COMPONENTS AND EQUIPMENT INSTALLATION, INCLUDING CONNECTIONS AND TO ASSIST IN FIELD TESTING. REPORT RESULTS IN WRITING.

3.9.2. PERFORM THE FOLLOWING FIELD TESTS AND INSPECTIONS, AND PREPARE TEST REPORTS:

3.9.2.1. TEST AND ADJUST CONTROLS AND SAFETIES.
3.9.2.2. TEST CALIBRATION OF ELECTRONIC CONTROLLERS BY DISCONNECTING INPUT SENSORS AND STIMULATING OPERATION WITH COMPATIBLE SIGNAL GENERATOR.
3.9.2.3. TEST EACH POINT THROUGH ITS FULL OPERATING RANGE TO VERIFY THAT SAFETY AND OPERATING CONTROL SET POINTS ARE AS REQUIRED.
3.9.2.4. TEST EACH CONTROL LOOP TO VERIFY STABLE MODE OF OPERATION AND COMPLIANCE WITH SEQUENCE OF OPERATION. ADJUST PID ACTIONS.
3.9.2.5. TEST EACH SYSTEM FOR COMPLIANCE WITH SEQUENCE OF OPERATION AND IN ACCORDANCE WITH THE APPROVED FUNCTIONAL TEST PLAN.
3.9.2.6. TEST SOFTWARE AND HARDWARE INTERLOCKS.
3.9.2.7. REPLACE DAMAGED OR MALFUNCTIONING CONTROLS AND EQUIPMENT AND REPEAT TESTING PROCEDURES.

3.10. FMCS STANDARDIZATION REQUIREMENTS

3.10.1. GRAPHICS: PROVIDE GRAPHICS ON EXISTING FMCS SYSTEM, FORMATTING SHALL MATCH EXISTING. GRAPHICS TO BE SUBMITTED TO THE BATTELLE LEAD DESIGN ENGINEER FOR APPROVAL.
3.10.2. ALARMS: ALARMS REQUIRED BY THE SEQUENCE OF CONTROL SHALL BE FULLY CONFIGURED FOR DELIVERY TO THE OPERATOR WORKSTATIONS AND THE ALARM FILES. THE ALARM MESSAGES SHALL BE DESCRIPTIVE AND INCLUDE AS A MINIMUM: BUILDING IDENTIFICATION, SYSTEM IDENTIFICATION, DATE, TIME TO THE SECOND, NATURE OF THE ALARM. THE SYSTEM SHALL BE CONFIGURED TO SEND AN ALARM MESSAGE ON RETURN TO NORMAL.
3.10.3. TRENDS: TREND I/O POINT PRESENT VALUES, SET POINTS, AND OTHER PARAMETERS USED IN THE SEQUENCE OF OPERATION. TRENDS SHALL BE STORED WITHIN THE CONTROLLER AND UPLOADED TO SERVER AUTOMATICALLY ON REACHING 80% OF CONTROLLER BUFFER LIMIT, OR BY OPERATOR REQUEST, OR BY ARCHIVING TIME SCHEDULE.

230913 VARIABLE FREQUENCY/ADJUSTABLE SPEED DRIVES

1. GENERAL

1.1. SUBMITTALS: START-UP REPORTS.

2. EXECUTION

2.1. INSPECTION AND INSTALLATION: VERIFY INSTALLATION CONDITIONS AS SATISFACTORY TO RECEIVE WORK OF THIS SECTION. DO NOT INSTALL UNTIL ANY UNSATISFACTORY CONDITIONS ARE CORRECTED. BEFORE AND DURING INSTALLATION, PROTECT VFD FROM SITE CONTAMINANTS.

2.2. COORDINATE REQUIRED ELECTRICAL AND CONTROL INSTALLATION WORK WITH OTHER DIVISIONS AS REQUIRED

2.3. CERTIFIED FACTORY START-UP SHALL BE PROVIDED FOR EACH DRIVE BY A FACTORY AUTHORIZED SERVICE CENTER. SUBMIT A CERTIFIED START-UP FORM FOR EACH DRIVE.

232113 HYDRONIC PIPING (INCLUDING REFRIGERANT RELIEF VALVE PIPING)

1. GENERAL

1.1. CODE APPLICABILITY: ASME B31.9, IMC.

1.2. WORKING PRESSURE: 150 PSIG.

1.3. SUBMITTALS

1.3.1. PRODUCT DATA FOR EACH TYPE OF PIPING, FITTINGS, VALVES AND SPECIALTIES INDICATED.
1.3.2. LEAK TEST REPORT.

2. PRODUCTS

2.1. PIPE (2" AND UNDER): TYPE "L" HARD DRAWN COPPER TUBING PER ASTM B88.

2.2. FITTINGS (2" AND UNDER): WROUGHT COPPER SOLDER JOINT TYPE PER ASME B16.22. OR PRESS FIT.

2.3. PIPE (2-1/2" AND OVER): BLACK STEEL, SCHEDULE 40 WELDED OR SEAMLESS, PER ASTM A53.

2.4. FITTINGS (2-1/2" AND OVER): BUTTWELDED PER ASTM A234, GRADE WPB AND ASME B16.9, WALL THICKNESS TO MATCH PIPE.

2.5. FITTINGS (2-1/2" AND OVER) AT CHILLER CONNECTIONS: GROOVE TYPE. VICTAULIC, GRUVLOC OR APPROVED EQUAL.

2.6. CAST-IRON PIPE FLANGES AND FLANGED FITTINGS: ASME B16.1, CLASSES 25, 125, AND 250; RAISED GROUND FACE, AND BOLT HOLES SPOT FACED AS INDICATED IN "PIPING APPLICATIONS" ARTICLE.

2.7. PIPE INSULATION: SEE 200700.

2.8. PIPE HANGERS: SEE 200529.

2.9. VALVES: SEE 200523

2.10. DIELECTRIC UNIONS AND FLANGES: ASSE1079, PRESSURE RATING OF 150 PSI

2.11. DRAIN VALVE: 3/4" MALE THREAD, BRONZE BODY, BLOWOUT PROOF STEM, FULL PORT BALL VALVE, 3/4" HOSE CONNECTION ON OUTLET WITH CAP. NIBCO MODEL T58570HC.

2.12. Y-PATTERN STRAINER: ACCEPTABLE MANUFACTURERS: SPIRAX/SARCO, MUELLER. SIZE 5" AND LARGER. FLANGED IRON BODY FOR 150 PSIG WORKING PRESSURE, BASKET PATTERN WITH 1/8" STAINLESS STEEL PERFORATED SCREEN. MAX PRESSURE DROP OF 10' W.G.

2.13. CHECK VALVE: IRON, GROOVED-END SWING CHECK VALVE, 300 CWP. BODY MATERIAL: ASME A 536, DUCTILE IRON. SEAL: EPDM. DISC: SPRING OPERATED, DUCTILE IRON OR STAINLESS STEEL.

2.14. TEST PLUGS: BRASS OR STAINLESS STEEL WITH CORE INSERTS FOR TEMPERATURE AND PRESSURE, GASKETED AND THREADED CAP, CAP TO BE STRAPPED TO BODY. USE EXTENDED BODY TYPE IF PIPING IS INSULATED. 500 PSI RATED. MANUFACTURERS: PETERSON EQUIPMENT CO., TRERICE, WATTS OR APPROVED EQUAL.

2.15. TEMPERATURE GAUGES: 1/4" OR 1/2" NPT STEM CONNECTION, 2" DIAL SIZE, STAINLESS STEEL, -20/120°F RANGE. ASHCROFT SERIES EI OR APPROVED EQUAL. PROVIDE COMPLETE WITH THERMOWELL.

2.16. PRESSURE GAUGES: 0-60 PSI, 2-1/2" DIAL, LIQUID FILLED 1/4" NPT BOTTOM CONNECTION, WEKSLER # BY42Y OR APPROVED EQUAL. PROVIDE COMPLETE WITH 1/4" BRASS OR STAINLESS STEEL BALL VALVE.

2.17. THERMOWELLS: ASME B40.200. PRESSURE-TIGHT, SOCKET-TYPE FITTING MADE FOR INSERTION INTO PIPING TEE FITTING. MATERIAL FOR COPPER TUBING: CNR OR CUNI. MATERIAL FOR STEEL PIPING: CSA. STEPPED SHANK UNLESS STRAIGHT OR TAPERED SHANK IS INDICATED. INSERTION LENGTH AS REQUIRED TO MATCH THERMOMETER BULB OR STEM. LAGGING EXTENSION INCLUDED ON THERMOWELLS FOR INSULATED PIPING AND TUBING. HEAT-TRANSFER MEDIUM: MIXTURE OF GRAPHITE AND GLYCERIN.

2.18. FLEXIBLE CONNECTORS AT PUMP

2.18.1. SUCTION SIDE: 304 STAINLESS STEEL, CLOSE PITCH, ANNULAR CORRUGATED HOSE WITH A TYPE 304 BRAIDED OUTER COVERING, ANSI CLASS 150 CARBON STEEL PLATE FLANGES. METRAFLEX MODEL SLPC OR APPROVED EQUAL.

2.18.2. DISCHARGE SIDE: 304 STAINLESS STEEL, CLOSE PITCH, ANNULAR CORRUGATED HOSE WITH A TYPE 304 BRAIDED OUTER COVERING, ANSI CLASS 150 CARBON STEEL PLATE FLANGES, WITH INTERNAL FLOW STRAIGHTENING VANES. METRAFLEX MODEL VANE FLEX VF OR APPROVED EQUAL.

2.19. FLEXIBLE CONNECTORS AT CHILLER
2.19.1. RUBBER PACKLESS TYPE, SINGLE SPHERE WITH EXTERNAL CONTROL RODS, MINIMUM PRESSURE RATING OF 225 PSIG AT 170 DEG F, NEOPRENE COVER AND TUBE, FLANGED END CONNECTIONS, 6-INCH LENGTH. PROVIDE KEFLEC SERIES SNN (STRAIGHT) OR SERIES RNN (CONCENTRIC REDUCER) AS INDICATED, OR APPROVED EQUAL.

3. EXECUTION

3.1. TESTING: PERFORM HYDROSTATIC TESTING PER ASME B31.9 ON INSTALLED PIPING. TEST PRESSURE SHALL BE 150 PSIG WITH A TEST DURATION OF 4 HOURS MINIMUM. AN IN-SERVICE TEST IS ACCEPTABLE AT TIE-IN POINTS AND ANY OTHER LOCATION WHERE A HYDROSTATIC TEST IS NOT FEASIBLE. USE OF THE SYSTEM MEDIA IS ACCEPTABLE FOR TESTING IF IT IS NON-HAZARDOUS.

3.2. INSTALL PIPING WITH WELDED JOINTS. USE FLANGES AT EQUIPMENT AND VALVE CONNECTIONS ONLY AS INDICATED ON THE DRAWINGS.

3.3. INSTALL DIELECTRIC FITTINGS AT CONNECTION OF DISSIMILAR METAL PIPING AND TUBING.

(CONTINUED ON G0-005)

APPROVAL DATE 02/10/2021

REVISIONS DESCRIPTION

DOCUMENT NO S804449-G0-004		SERVICE REQUEST NO S804449
CURRENT REVISION	ORIGINAL	U. S. DEPARTMENT OF ENERGY PACIFIC NORTHWEST SITE OFFICE
DRAWN CA HUGHES	DRAWN CA HUGHES	Pacific Northwest Division — Battelle — Richland, Washington 99352
CHECKED JM SCOTT	CHECKED JM SCOTT	GENERAL CHILLER #5 INSTALLATION SPECIFICATIONS
DRAFTING CHECKER GT KIRK	DRAFTING CHECKER GT KIRK	
ENGINEER CA HUGHES	ENGINEER CA HUGHES	
APVD DJ DE SMET	APVD DJ DE SMET	
OTHER	OTHER	PROJ TITLE 3410 CHILLER #5 INSTALLATION
OTHER	OTHER	SIZE D · BLDG 3410 · DWG NO G0-004 · REV NO 0
		SCALE NONE · SHEET 1 OF 1

PLOT NAME: S804449-G0-004.dwg
PLOT DATE: 2/10/21 4:20pm
PLOT BY: HUGHES, CHRISTOPHER A

SPECIFICATIONS

(CONTINUED FROM G0-004)

SECTION 232123 - HYDRONIC PUMPS

1. GENERAL

1.1. SUBMITTAL DATA

1.1.1. SHOP DRAWINGS: FOR EACH PUMP.

1.1.2. SHOW PUMP LAYOUT AND CONNECTIONS.

1.1.3. INCLUDE SETTING DRAWINGS WITH TEMPLATES FOR INSTALLING FOUNDATION AND ANCHOR BOLTS AND OTHER ANCHORAGES.

1.1.4. INCLUDE DIAGRAMS FOR POWER, SIGNAL, AND CONTROL WIRING.

2. PRODUCTS

2.1. NOT USED

3. EXECUTION

3.1. CONTRACTOR SHALL INSTALL PUMP IN ACCORDANCE WITH THE MANUFACTURER'S INSTRUCTIONS. ALL BASE MOUNTED PUMPS TO BE ALIGNED UPON RECEIPT AT JOBSITE, DURING INSTALLATION, AND AFTER SYSTEM FILL. CONTRACTOR SHALL LEVEL AND GROUT EACH PUMP ACCORDING TO THE MANUFACTURER RECOMMENDATIONS TO INSURE PROPER ALIGNMENT PRIOR TO OPERATION.

3.2. PIPE CONNECTIONS TO PUMPS SHALL BE MADE IN SUCH A MANNER SO AS NOT TO EXERT ANY STRESS ON PUMP HOUSINGS. IF NECESSARY TO MEET THIS REQUIREMENT, PROVIDE ADDITIONAL PIPE SUPPORTS AND FLEX CONNECTORS.

3.3. PROVIDE ON THE INLET SIDE OF A PUMP A SUCTION DIFFUSER SHALL BE USED TO PROVIDE APPROPRIATE FLOW DISTRIBUTION INTO THE EYE OF THE PUMP'S IMPELLER.

3.4. PUMPS SHALL NOT BE RUN DRY TO CHECK ROTATION.

SECTION 236416 - FRICTIONLESS CENTRIFUGAL CHILLERS

1. GENERAL

1.1. SUMMARY

1.1.1. THE CHILLER IS BATTELLE FURNISHED CONTRACTOR INSTALLED (BFCI). THE CONTRACTOR SHALL COORDINATE WITH THE CHILLER FACTORY REPRESENTATIVE FOR FACTORY START-UP. THE CHILLER WILL BE IN STORAGE AT ONE OF THE OWNERS STORAGE FACILITIES, THE CONTRACTOR SHALL ARRANGE FOR THE RELOCATION OF THE CHILLER FROM THE RICHLAND STORAGE FACILITY TO THE INSTALLED LOCATION.

1.1.2. DRAWINGS AND GENERAL PROVISIONS OF THE CONTRACT, INCLUDING GENERAL AND SUPPLEMENTARY CONDITIONS AND DIV 1 SPECIFICATION SECTIONS, APPLY TO THIS SECTION.

2. EXECUTION

2.1. INSTALLATION

2.1.1. INSTALLING CONTRACTOR SHALL:

2.1.1.1. INSPECT CHILLER FOR DAMAGE PRIOR TO RELOCATION. NOTIFY BATTELLE CONSTRUCTION MANAGER IF ANY DAMAGE IS FOUND.
2.1.1.2. INSTALL PER MANUFACTURER'S REQUIREMENTS AND CONTRACT DOCUMENTS.
2.1.1.3. ADJUST CHILLER ALIGNMENT ON FOUNDATIONS, OR SUBBASES AS CALLED FOR ON DRAWINGS.
2.1.1.4. ARRANGE PIPING TO ALLOW FOR DISMANTLING TO PERMIT HEAD REMOVAL AND TUBE CLEANING.
2.1.1.5. COORDINATE ELECTRICAL INSTALLATION WITH ELECTRICAL CONTRACTOR.
2.1.1.6. COORDINATE CONTROLS WITH BATTELLE FMCS SPECIALIST.
2.1.1.7. PROVIDE MATERIAL REQUIRED FOR A FULLY OPERATIONAL AND FUNCTIONAL CHILLER.

3. START-UP

3.1. FACTORY TECHNICIAN START-UP SERVICES (BFCI): CONTRACTOR SHALL COORDINATE WITH THE FACTORY TECHNICIAN TO PROVIDE STARTUP SERVICE. THE TECH SHALL PROVIDE FOR AS LONG A TIME AS IS NECESSARY TO ENSURE PROPER OPERATION OF THE UNIT, BUT IN NO CASE FOR LESS THAN TWO FULL WORKING DAYS. DURING THE PERIOD OF START-UP, THE START-UP TECHNICIAN SHALL INSTRUCT THE OWNER'S REPRESENTATIVE IN PROPER CARE AND OPERATION OF THE UNIT.

DIVISION 26 - ELECTRICAL

260500 BASIC ELECTRICAL MATERIALS AND METHODS

1. ELECTRICAL INSTALLATION SHALL BE IN ACCORDANCE WITH THE NATIONAL ELECTRICAL CODE NFPA 70, 2020 VERSION. ANY CONFLICTS BETWEEN THE ENGINEERING DRAWINGS AND THE NEC SHALL BE RESOLVED WITH THE ELECTRICAL ENGINEER BEFORE PROCEEDING WITH INSTALLATION. INSTALLATION SHALL BE INSPECTED FOR CODE COMPLIANCE BY A BATTELLE DESIGNATED INSPECTOR.

2. ABANDONED EQUIPMENT, HANGERS, SUPPORTS, DEVICES, WIRE AND ACCESSIBLE CONDUIT SHALL BE REMOVED.

3. PROVIDE CORRECT, TYPEWRITTEN, CIRCUIT DIRECTORIES OF NEW OR REVISED DISTRIBUTION CIRCUITS.

4. SURFACE MOUNTED EMT SHALL RUN PARALLEL TO CEILING AND VERTICAL RUNS SHALL BE PERPENDICULAR TO FLOOR. SUPPORT AS REQUIRED BY NEC.

5. WIRE SHALL BE COPPER, #12 AWG MINIMUM SIZE, FOR POWER WIRING, WITH 90° C TEMPERATURE RATED, FLAME RETARDANT, HEAT RESISTANT, THERMOPLASTIC 600 VOLT (THHN) INSULATION.

6. PROVIDE A GREEN EQUIPMENT GROUND WIRE, #12 AWG COPPER MINIMUM, FOR ALL NEW CIRCUITS. SIZE IN ACCORDANCE WITH NEC 250.122.

7. INSULATED WIRE NUTS SHALL BE USED FOR SPLICES OF #8 AND SMALLER CONDUCTORS. INSULATING TAPE SHALL BE 3M #33 OR #88. USE POLARIS, BURNDY, OR ILSCO INSULATED CLEAR SPLICE CONNECTIONS FOR CONDUCTORS #6 AND LARGER.

8. ELECTRICAL CONDUCTORS SHALL BE COLOR CODED TO MEET IDENTIFICATION REQUIREMENTS IN NEC 210.5(C) AS FOLLOWS:

8.1. 480V, 3 PHASE, A, B, C COLORS RED, YELLOW AND BLUE, RESPECTIVELY. NEUTRAL WHITE OR GRAY EXCEPT WHEN INSTALLED IN CONDUIT SHARED WITH 120V TO GROUND. IN THOSE CASES THE 277V TO GROUND SHOULD HAVE A WHITE WITH RED STRIPE NEUTRAL.

8.2. 208Y/120V, 3-PHASE, 4-WIRE, A,B,C, COLORS BLACK, PURPLE, BROWN NEUTRAL COLOR WHITE OR GRAY.

9. FUNCTIONAL/ACCEPTANCE TESTING

9.1. THE FOLLOWING TESTS SHALL BE CARRIED OUT, DOCUMENTED & SUBMITTED TO CONSTRUCTION MANAGER: PROVIDE WRITTEN DOCUMENTATION TO THE BATTELLE ELECTRICAL ENGINEER.

9.1.1. CONTINUITY OF CONDUCTORS.
9.1.2. INSULATION RESISTANCE BETWEEN ALL CONDUCTORS.
9.1.3. TORQUE VALUES FOR ALL LUGS (INCLUDES SPLICE KITS).
9.1.4. POLARITY/PHASE VERIFICATION.
9.1.5. START CHILLER PER SEQUENCE OF OPERATIONS.
9.1.6. FIRE ALARM TESTING.

28100 FIRE DETECTION AND ALARM

1. THE EXISTING CONDITIONS SHOWN ON DRAWINGS ARE FROM AVAILABLE RECORD DRAWINGS AND SHOWN FOR REFERENCE ONLY. VERIFY ACTUAL FIELD CONDITIONS AT THE SITE .

2. RELAY CONTROL DEVICE: MANUFACTURED BY NOTIFIER FRM-1 RELAY CONTROL MODULE, WALL- MOUNT WITH SURFACE-MOUNT BACKBOX.

3. DATA CIRCUIT: 1-PAIR, #16AWG TWISTED NON-SHIELDED, FIRE-RATED CABLE (FPLP). WEST PENN WIRE 60991B.

4. FIRE ALARM WIRING AND CABLING SHALL BE INSTALLED IN CONDUIT AND DEDICATED FOR THE FIRE ALARM CIRCUITS ONLY.

5. SPLICES ARE TO MADE WITH TERMINATION KITS (ARMACOST RFTERMBK) OR WIRE NUTS (NOT LARGER THAN THE IDEAL 73B).

6. FIRE ALARM SYSTEM JUNCTION BOXES SHALL BE LABELED "FIRE ALARM" IN WHITE LETTERS ON RED COVER PLATED. PAINT COVER PLATES OR USE PRE-PAINTED PLATES SIMILAR TO SPACE AGE ELECTRONICS MODEL FP4.

7. CIRCUIT WIRING MUST BE LABELED WITH CIRCUIT NUMBERS AS CALLED OUT ON THE DRAWINGS.

8. LABEL THE FRM DEVICE WITH THE DEVICE NUMBER SHOWN ON THE DRAWING ON THE BOTTOM OF THE DEVICE WHERE THE LABELS CAN BE EASILY SEEN FROM THE FLOOR.

9. DEVICE LABELS SHALL BE PERMANENT, MACHINE GENERATED, AND WHITE VINYL WITH BLACK LETTERS.

10. WIRING LABELS SHALL BE SELF-LAMINATING, WHITE/TRANSPARENT WINYL AND WRAPPED AROUND THE WIRE. FLAG TYPE LABELS ARE NOT ALLOWED.

11. LABELS SHALL BE OF ADEQUATE SIZE TO ACCOMMODATE CIRCUMFERENCE OF CABLE BEING LABELED AND PROPERLY SELF-LAMINATE OVER FULL EXTENT OF PRINTED AREA OF LABEL

12. THE COMPLETED SYSTEM SHALL BE SUBJECTED TO A FUNCTIONAL TEST THAT MAY INCLUDE SAMPLE TESTING OF OF OTHER DEVICES. DIRECTIONS FOR THE FUNCTIONAL TEST WILL BE BY BATTELLE DESIGN ENGINEER OR BATTELLE FIRE PROTECTION ENGINEER AND SHALL BE WITNESSED BY THE BATTELLE FIRE PROTECTION ENGINEER AND THE CONSTRUCTION MANAGER. A CERTIFIED NOTIFIER TECHNICIAN SHALL UPDATE THE ONYX WORK STATIONS TO INDICATE THE ADDITIONAL DEVICE.

260523 - CONTROL VOLTAGE ELECTRICAL POWER CABLES

1. GENERAL

1.1. SUBMITTALS: PRODUCT DATA FOR EACH TYPE OF PRODUCT.

2. PRODUCTS/EXECUTION

2.1. MANUFACTURERS: SUBJECT TO COMPLIANCE WITH REQUIREMENTS, OR COMPARABLE PRODUCT BY ONE OF THE FOLLOWING:

2.1.1. ENCORE WIRE CORPORATION
2.1.2. GENERAL CABLE TECHNOLOGIES CORPORATION
2.1.3. SOUTHWIRE COMPANY

2.2. CONTROL AND SIGNAL CIRCUIT CONDUCTORS AS FOLLOWS:
2.2.1. CLASS 1 CONTROL CIRCUITS: STRANDED COPPER, TYPE THHN-THWN.
2.2.2. CLASS 2 AND 3 CONTROL CIRCUITS: STRANDED COPPER; CABLE TYPES CL2, CL3, CM, CMG, CMP OR OTHERS AS ALLOWED BY NEC ARTICLE 725.

2.3. COMPLY WITH REQUIREMENTS IN SECTION 260500 FOR PATHWAYS.

2.4. INSTALLATION OF CONDUCTORS AND CABLES AS FOLLOWS:

2.4.1. INSTALL CABLES AND CONDUCTORS IN EMT, CONCEALED IN BUILDING FINISHES TO EXTENT FEASIBLE. JUNCTION BOX COVERS FOR RACEWAYS 50V OR LESS SHALL BE PAINTED GREEN.
2.4.2. CABLES/CONDUCTORS AS FOLLOWS:

2.4.2.2. CABLE JACKET COLOR:
2.4.2.2.1. SENSOR CABLE: WHITE
2.4.2.2.2. MSTP/FC/N2 CABLE: BLUE
2.4.2.2.3. SA BUS/CONTROLLER EXPANSIONS/THERMOSTAT CABLE: BROWN
2.4.2.2.4. MODBUS CABLE: GREEN

2.4.2.3. CONDUCTOR SIZE: IF MANUFACTURER RECOMMENDED SIZES VARY FROM SPECIFICATION SUBMIT FOR APPROVAL BEFORE INSTALLING.
2.4.2.3.1. SENSOR CONDUCTORS: #18 AWG SHIELDED ANIXTER #CBL-18/*-PLN.
2.4.2.3.2. MSTP/FC/N2 CONDUCTORS: #22 AWG SHIELDED, ANIXTER #CBL-22/3-FC-PLN.
2.4.2.3.3. SA BUS/CONTROLLER EXPANSIONS/THERMOSTAT CONDUCTORS: #22 AWG, ANIXTER #CBL-22/2P-SA-PLN.
2.4.2.3.4. MODBUS CONDUCTORS: #22 AWG SHIELDED, ANIXTER #CBL-22/*-PLN.

2.4.3. SPLICED CABLES NOT ALLOWED.
2.4.4. DO NOT INSTALL CABLES IN SAME CONDUIT AS HIGH VOLTAGE (50 VOLTS AND HIGHER) CONDUCTORS.
2.4.5. BUNDLE, LACE, AND TRAIN CONDUCTORS TO TERMINAL POINTS WITHOUT EXCEEDING MANUFACTURER'S LIMITATIONS ON BENDING RADII.
2.4.6. DO NOT INSTALL BRUISED, KINKED, SCORED, DEFORMED, OR ABRADED CABLE. DO NOT SPLICE CABLE BETWEEN TERMINATION, TAP, OR JUNCTION POINTS. REMOVE AND DISCARD CABLE IF DAMAGED DURING INSTALLATION AND REPLACE IT WITH NEW CABLE.
2.4.7. LABEL EACH END OF CABLING FOR FC BUS AND INPUT/OUTPUT CABLING.

2.5. MINIMUM CONTROL CIRCUIT CONDUCTOR SIZES:

2.5.1. CLASS 1 REMOTE-CONTROL AND SIGNAL CIRCUITS #14 AWG.
2.5.2. CLASS 2 LOW-ENERGY, REMOTE-CONTROL, AND SIGNAL CIRCUITS, #18 AWG.
2.5.3. CLASS 3 LOW-ENERGY, REMOTE-CONTROL, ALARM, AND SIGNAL CIRCUITS, #18 AWG.
2.5.4. UNLESS OTHERWISE NOTED IN INSTALLATION OF CONDUCTORS AND CABLES SECTION.

2.6. FIELD QUALITY CONTROL: VISUALLY INSPECT CABLE PLACEMENT, CABLE TERMINATION, GROUNDING AND LABELING.

APPROVAL DATE 02/10/2021

REVISIONS DESCRIPTION

DOCUMENT NO S804449-G0-005		SERVICE REQUEST NO S804449
CURRENT REVISION	ORIGINAL	U. S. DEPARTMENT OF ENERGY PACIFIC NORTHWEST SITE OFFICE
DRAWN CA HUGHES	DRAWN CA HUGHES	Pacific Northwest Division — Battelle — Richland, Washington 99352
CHECKED JM SCOTT	CHECKED JM SCOTT	GENERAL CHILLER #5 INSTALLATION SPECIFICATIONS
DRAFTING CHECKER GT KIRK	DRAFTING CHECKER GT KIRK	
ENGINEER CA HUGHES	ENGINEER CA HUGHES	
APVD DJ DE SMET	APVD DJ DE SMET	PROJ TITLE 3410 CHILLER #5 INSTALLATION
OTHER	OTHER	SIZE D · BLDG 3410 · DWG NO G0-005 · REV NO 0
OTHER	OTHER	SCALE NONE · SHEET 1 OF 1

PNNL-BATT_D [REV1 8-19-14]

PLOT BY: HUGHES, CHRISTOPHER A

PLOT NAME: S804449-G0-005.dwg
PLOT DATE: 2/10/21 - 4:20pm

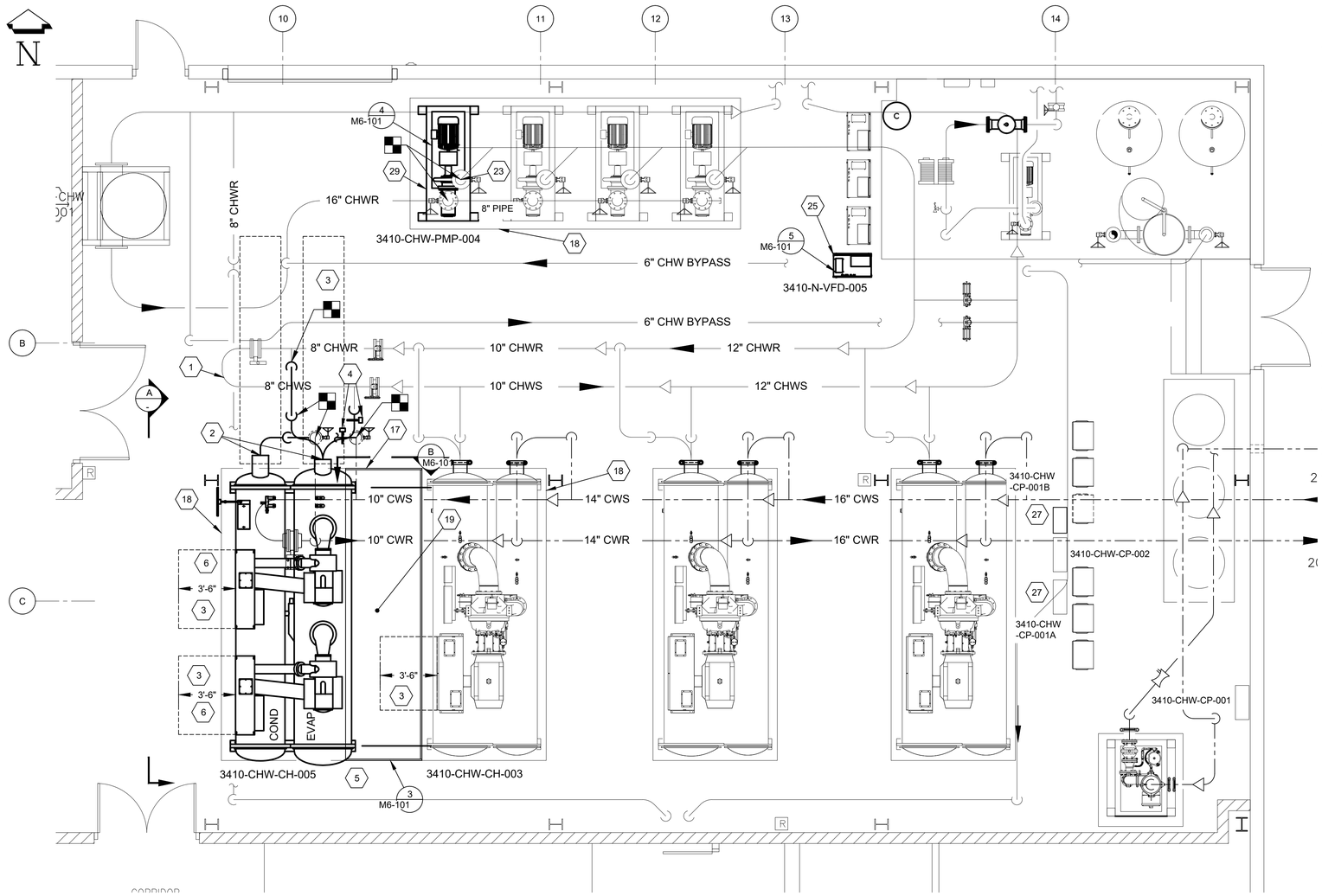

FIRST FLOOR MECHANICAL PLAN

SCALE: 1/4" = 1'-0"

SHEET NOTES

1. PIPING PROVIDED AS PART OF PROJECT S789008 - REPLACE CH-004 HEAT EXCHANGER AND PUMP. COORDINATE LOCATION OF CHILLED WATER TAPS BASED ON CHILLER.
2. CONNECT TO CHILLER WITH FLEXIBLE PIPE CONNECTION 4 PLACES. CHILLER CONNECTION IS 12", PROVIDE ECCENTRIC REDUCER.
3. MAINTAIN REQUIRED WORKING AND ELECTRICAL CLEARANCES.
4. PROVIDE McCROMETER FPI MAG FLOW METER WITH PROCOMM CONVERTER. PROVIDE WITH HOT TAP INSTALLATION KIT FOR WELDED PIPE.
5. 3410-CHW-CH-005, MAGNETIC BEARING CHILLER, BFCI.
6. PROVIDE "ADD-A-LEVEL" WORK PLATFORM, PLASTIC, STACKABLE PLATFORM, 36"X66"X4". GRAINGER ITEM 4RNR7 OR APPROVED EQUAL. CENTER ON CONTROLS CABINET. PROVIDE NON-SLIP SURFACE.
7. CONNECT TO EXISTING CARBON STEEL PRESSURE RELIEF VENT WITH 2" TYPE L COPPER PIPING WITH PRO-PRESS FITTING. PROVIDE DIELECTRIC UNION. ROUTE PIPING AS INDICATED, SUPPORT PER SPECIFICATION. SLOPE TO DRAIN.
8. PROVIDE FLOW SWITCH, CONNECT TO CHILLER CONTROL PANEL.
9. PROVIDE BUTTERFLY VALVE WITH CHAIN OPERATOR. PROVIDE VALVE WITH FLANGE CONNECTIONS.
10. STRAINER WITH BALL VALVE, HOSE CONNECTION AND CAP.
11. PROVIDE TEMPERATURE GAGE WITH THERMOWELL 4 PL.
12. PROVIDE PRESSURE GAGE 2 PL.
13. PROVIDE 3/4" BALL VALVE, HOSE CONNECTION AND CAP 9 PL.
14. PROVIDE TEST PLUG 4 PL.
15. CONNECT TO 1" FPT RELIEF VALVE WITH 6" LONG BRAIDED STAINLESS STEEL FLEXIBLE CONNECTION AND UNION 4 PL.
16. PROVIDE LINE SIZE CONTROL VALVE, CHW-CTV-104 AND CW-CTV-108.
17. SAW CUT AND REMOVE SECTION OF EXISTING SLAB BETWEEN EQUIPMENT PADS AS SHOWN.
18. EXISTING EQUIPMENT PAD TYPICAL.
19. EXTEND EQUIPMENT PAD AS SHOWN. PROVIDE NEW EXPANSION JOINT MATERIAL, SEE DETAIL 3 SHEET M6-101 TYPICAL 3 SIDES.
20. VIBRATION ISOLATION PADS PROVIDED WITH CHILLER.
21. PROVIDE RIGID GROOVED PIPE COUPLINGS AT CHILLER CHW AND CW CONNECTIONS TO FACILITATE PERIODIC TUBE CLEANING AND MAINTENANCE.
22. PROVIDE REMOVABLE INSULATION BLANKET ON PIPING AND FITTINGS AT CHILLER CHW PIPING CONNECTIONS TO FACILITATE PERIODIC EVAPORATOR TUBE CLEANING AND MAINTENANCE.
23. PROVIDE CHECK VALVE ON PUMP DISCHARGE.
24. REMOVE AND RETAIN FRAMING CHANNEL LOCATED ON EXISTING SLAB FOR REINSTALLATION.
25. BATTELLE FURNISHED CONTRACTOR INSTALLED VFD. CONNECT TO FMCS WITH BACNET MS/TP. SEE E1-101 FOR ADDITIONAL INFORMATION.
26. PROVIDE BELL & GOSSETT CIRCUIT SETTER PLUS BALANCING VALVE. TEST AND BALANCE CONTRACTOR TO ADJUST VALVE TO MAINTAIN MAX DESIGN FLOWS WITH TWO CHILLERS OPERATING AT MAX CONDITIONS.
27. PROVIDE JCI MS-IOM 4711-1. PROVIDE KEYED HINGED ENCLOSURE SIZED FOR TWO IOMS CONTROLLERS. KEY TO MATCH EXISTING CONTROL PANELS. PROVIDE 22 AWG, 2 TWISTED PAIRS, SHIELDED CABLE (ANIXTER PART NUMBER: CBL-22/2P-SA-PLN FOR EXTENSION OF SA BUS. EXTEND 24 VAC POWER FROM CHW-CP-001A. PROVIDE LABEL FOR CHW-CP-001A.
28. SEISMIC SNUBBER. ANCHOR TO CONCRETE BASE WITH QTY (4) Ø5/8 x 3-1/8" EMBEDMENT HILTI KWIK BOLT TZ, TYPE 316 SST. ATTACH TO CENTER OF CHILLER SUPPORT RAIL WITH STEEL PLATES (THICKNESS AS REQUIRED) AND QTY (4) Ø5/8 x LAR BOLTS, PLATE WASHERS AND NUTS.
29. BATTELLE FURNISHED CONTRACTOR INSTALLED PUMP. CONTRACTOR TO PROVIDE ALL INSTALLATION COMPONENTS REQUIRED PER DETAIL 4 SHEET M6-101.

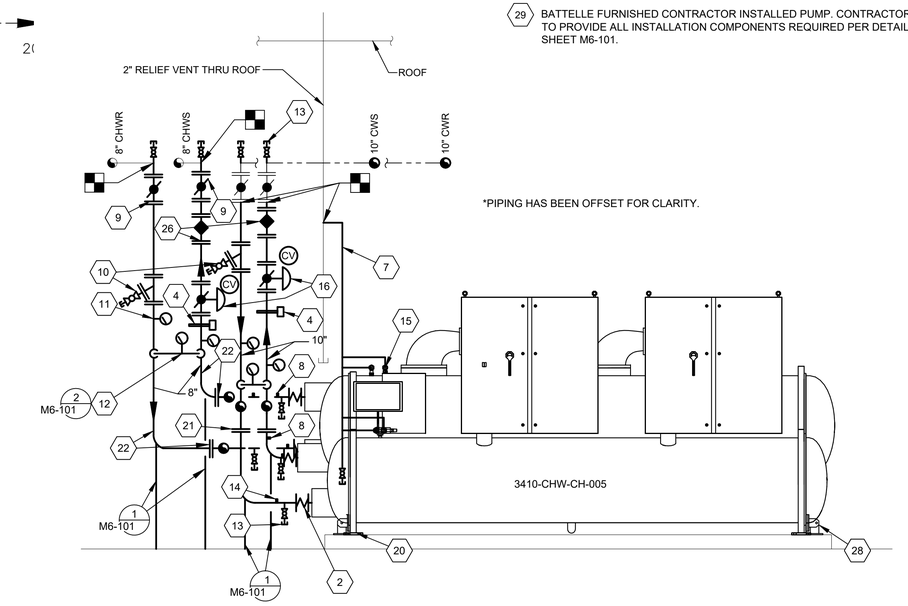

A SECTION DETAIL

SCALE: 3/8" = 1'-0"

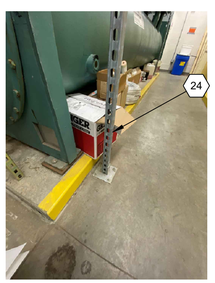

B SECTION DETAIL

SCALE: NONE

GENERAL NOTES

(UNLESS OTHERWISE NOTED)

1. SEE S804449-G0-001 FOR DRAWING LIST, LEGEND, ABBREVIATIONS AND KEY PLAN.
2. SEE G0-002 THROUGH G0-005 FOR SPECIFICATIONS.

APPROVAL DATE 02/10/2021

DOCUMENT NO S804449-M1-101	SERVICE REQUEST NO S804449
CURRENT REVISION	ORIGINAL
DRAWN CA HUGHES	DRAWN CA HUGHES
CHECKED JM SCOTT	CHECKED JM SCOTT
DRAFTING CHECKER GT KIRK	DRAFTING CHECKER GT KIRK
ENGINEER CA HUGHES	ENGINEER CA HUGHES
APVD DJ DE SMET	APVD DJ DE SMET
OTHER	OTHER
OTHER	OTHER

U. S. DEPARTMENT OF ENERGY
PACIFIC NORTHWEST SITE OFFICE

Pacific Northwest Division — Battelle — Richland, Washington 99352

MECHANICAL CHILLER #5 INSTALLATION PLAN

PROJ TITLE: 3410 CHILLER #5 INSTALLATION

SIZE	BLDG	DWG NO	REV NO
D	3410	M1-101	0

SCALE SHOWN — SHEET 1 OF 1

REVISIONS DESCRIPTION

PNNL-BATT_D [REV1 8-19-14]

PLOT NAME: S804449-M1-101.dwg
PLOT DATE: 2/10/21 4:20pm
PLOT BY: HUGHES, CHRISTOPHER A

WATER COOLED CENTRIFUGAL MAGNETIC BEARING WATER CHILLER SCHEDULE (BFCI)

EQUIPMENT IDENTIFICATION NUMBER	MANUFACTURER & MODEL NO	CAPACITY (TONS)	RFGT	MAX NPLV (KW/TON) / IPLV	EVAPORATOR SIDE					CONDENSER SIDE					UNIT ELECTRICAL DATA							FEATURES
					FLOW (GPM)	EWT (°F)	LWT (°F)	ΔP(FT WC)	FLUID	FLOW (GPM)	EWT (°F)	LWT (°F)	ΔP(FT WC)	FLUID	NO OF COMPRESSORS	MCA	MAX FUSE SIZE (AMP)	VOLTS	PHASE	HERTZ	KAIC	
3410-CHW-CH-005	DAIKIN WME092CD	735	R-134A	0.3313 / 0.3313	1100	59	43	8.2	WATER	1451	78	92	9.48	WATER	2	325 PER COMPRESSOR	500 PER COMPRESSOR	460	3	60	100	SEE SECTION 236416 FOR ADDITIONAL INFORMATION PROVIDE WITH REMOTE CHILLER ON/OFF CONTROL, CONNECT TO CONTROL POINT J25

GENERAL NOTES
(UNLESS OTHERWISE SPECIFIED)

1. SEE S804449-G0-001 FOR DRAWING LIST, LEGEND, ABBREVIATIONS AND KEY PLAN.
2. SEE S804449-G0-002 THROUGH G0-005 FOR SPECIFICATIONS.

CENTRIFUGAL PUMP SCHEDULE(BFCI)

EQUIPMENT IDENTIFICATION NUMBER	MANUFACTURER & MODEL NO	SERVICE	TYPE	GPM	TOTAL HEAD (FT WC)	IMPELLER DIAM (IN)	MOTOR HP	ELECTRICAL DATA			PUMP OPER WT (LB)	NOTES
								VOLT	PHASE	HZ		
3410-CHW-PMP-004	BELL & GOSSETT 1510-5GB	CHILLED WATER	BASE MOUNTED END SUCTION PUMP	1210	145	13	60	460	3	60	5,480	PROVIDE WITH SUCTION DIFFUSER PLUS. PUMP WEIGHT INCLUDES WEIGHT OF ISOLATION BASE.

CONTROL VALVE SCHEDULE

EQUIPMENT IDENTIFICATION NUMBER	MANUFACTURER & MODEL NO	MEDIUM	FLOW (GPM)	Cv	SIZE (IN)	NORMAL POSITION	FAIL POSITION	ACTUATOR	ACTUATOR TYPE	VALVE TYPE	NOTES
3410-CHW-CTV-104	BRAY MKL2-C080	WATER	1,210	2,800	8	CLOSED	CLOSED	MODULATING	ELECTRIC	BUTTERFLY	PROVIDE BRAY SERIES 70 ACTUATOR, 120V POWER INPUT
3410-CW-CTV-108	BRAY MKL2-C100	WATER	1,450	4,300	10	CLOSED	CLOSED	MODULATING	ELECTRIC	BUTTERFLY	PROVIDE BRAY SERIES 70 ACTUATOR, 120V POWER INPUT

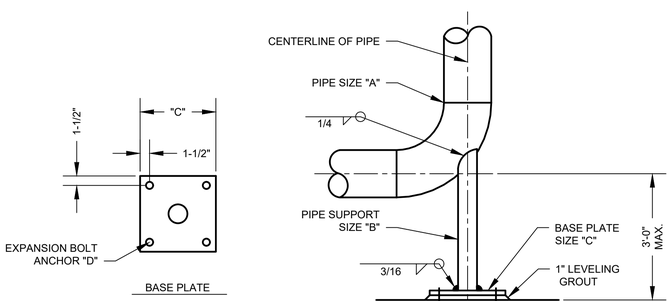

"A"	"B"	"C"	"D"
6	3	1/2 X 9 X 9	3/8
8	3	1/2 X 9 X 9	3/8
10	4	3/4 X 10 X 10	1/2
12	4	3/4 X 10 X 10	1/2
14	4	3/4 X 10 X 10	1/2
16	4	3/4 X 10 X 10	1/2
18	6	7/8 X 12 X 12	1/2
20	6	7/8 X 12 X 12	1/2
24	6	7/8 X 12 X 12	1/2
30	8	7/8 X 14 X 14	3/4

NOTES:

(1) ALL DIMENSIONS IN INCHES.
(2) NON-SHRINK GROUT
(3) SUPPORT PIPE TO BE ASME A53, GRADE B, TYPE E OR S, STANDARD WEIGHT, CARBON STEEL. EXPANSION BOLTS SHALL BE SST HILTI KWIK BOLT 3,
(4) STANDARD EMBEDMENT DEPTH.

1 M1-101 PIPE SUPPORT (AT ELBOW)
SCALE: NOT TO SCALE

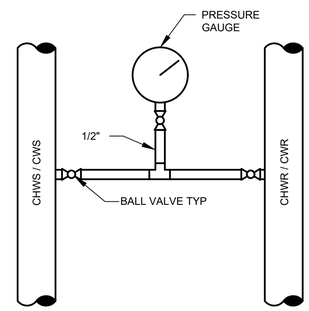

2 M1-101 PRESSURE GAUGE DETAIL
SCALE: NOT TO SCALE

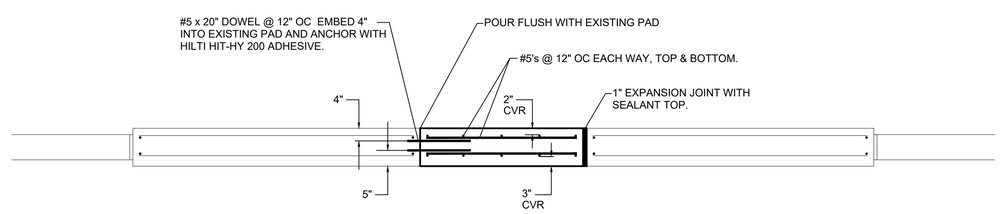

3 M1-101 CONCRETE PAD INSTALLATION DETAIL
SCALE: NOT TO SCALE

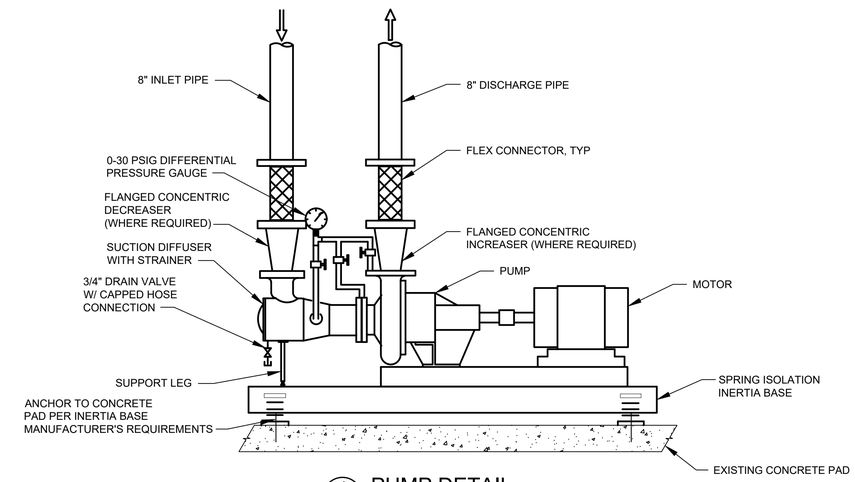

4 M1-101 PUMP DETAIL
SCALE: NONE

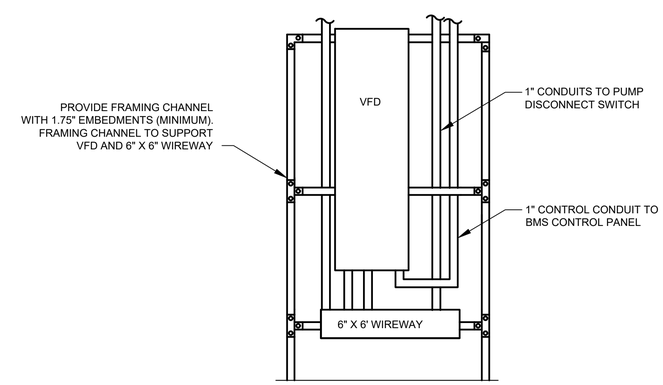

5 M1-101 VFD FRAMING DETAIL
SCALE: NONE

APPROVAL DATE 02/10/2021

DOCUMENT NO S804449-M6-101		SERVICE REQUEST NO S804449
CURRENT REVISION	ORIGINAL	U. S. DEPARTMENT OF ENERGY PACIFIC NORTHWEST SITE OFFICE
DRAWN CA HUGHES	DRAWN CA HUGHES	Pacific Northwest Division — Battelle — Richland, Washington 99352
CHECKED JM SCOTT	CHECKED JM SCOTT	MECHANICAL CHILLER #5 INSTALLATION SCHEDULES AND DETAILS
DRAFTING CHECKER GT KIRK	DRAFTING CHECKER GT KIRK	
ENGINEER CA HUGHES	ENGINEER CA HUGHES	
APVD DJ DE SMET	APVD DJ DE SMET	PROJ TITLE 3410 CHILLER #5 INSTALLATION
OTHER	OTHER	SIZE D — BLDG 3410 — DWG NO M6-101 — REV NO 0
OTHER	OTHER	SCALE NONE — SHEET 1 OF 1

REVISIONS DESCRIPTION

PNNL-BATT_D [REV1 8-19-14]

PLOT NAME: S804449-M6-101.dwg
PLOT DATE: 2/10/21 4:20pm
PLOT BY: HUGHES, CHRISTOPHER A

CHILLER BACnet OBJECT LIST

NETWORK CONTROL PROPERTY	READ / WRITE	OBJECT TYPE	INSTANCE	DESCRIPTION
APPLICATION VERSION	R	DEVICE	*	APPLICATION VERSION SOFTWARE RUNNING IN THE CHILLER
CHILLER LOCATION	W	DEVICE	*	DEFINES WHERE THE CHILLER IS PHYSICALLY LOCATED, CONTRACTOR SHALL ENTER "ROOM 1743"
CHILLER MODEL	R	DEVICE	*	ENTER CHILLER MODEL NUMBER
ACTIVE SETPOINT	R	AV	5	15.08-149.9 (SET TO 44.0°F)
ACTUAL CAPACITY	R	AV	2	0-100%
ACTIVE CAPACITY LIMIT (OUTPUT)	R	AV	1	0-100%
CAPACITY LIMIT SETPOINT - NETWORK	W	AV	3	0-100%; DEFAULT 100%
CHILLER ENABLE OUTPUT	R	BI	7	0-DISABLE, 1-ENABLE
CHILLER ENABLE SETPOINT	W	BV	2	0-DISABLE, 1-ENABLE
CHILLER CAPACITY LIMITED	R	BI	6	0=NOT LIMITED, 1=LIMITED
CHILLER LOCAL/NETWORK	R	MSV	3	0=NETWORK, 1=LOCAL
CHILLER MODE OUTPUT	R	MSV	2	SET TO 2=COOL
CHILLER MODE SETPOINT - NETWORK	W	BI	3	SET TO 2=COOL
CHILLER ON OFF	R	MSV	4	0=CHILLER OFF, 1=CHILLER ON
CHILLER STATUS BACnet	R	AI	1	1=OFF, 2=START, 3=RUN, 4=PRESHUTDOWN, 5=SERVICE
COMPRESSOR AVERAGE CURRENT (EACH COMPRESSOR)	R	AI	9	0-2000 AMPS
COMPRESSOR DISCHARGE REFRIGERANT PRESSURE (EACH COMPRESSOR)	R	AI	81	0-410 PSI
COMPRESSOR DISCHARGE REFRIGERANT TEMPERATURE (EACH COMPRESSOR)	R	AI	63	-40°F TO 257°F
COMPRESSOR DISCHARGE SATURATED REFRIGERANT TEMPERATURE (EACH COMPRESSOR)	R	AV	26	-15°F TO 185°F
COMPRESSOR PERCENT RLA (EACH COMPRESSOR)	R	AV	8	0% - 150% RLA
COMPRESSOR POWER (EACH COMPRESSOR)	R	AI	45	0-600 KW
COMPRESSOR RUN HOURS (EACH COMPRESSOR)		AV	74	0-999,999
COMPRESSOR STARTS (EACH COMPRESSOR)	R	AV	92	0-65,635
COMPRESSOR SUCTION REFRIGERANT TEMPERATURE (EACH COMPRESSOR)	R	AI	105	-40°F TO 257°F
COMPRESSOR AVERAGE VOLTAGE (EACH COMPRESSOR)	R	AI	27	0-10,000 VOLTS
CONDENSER ENTERING WATER TEMPERATURE	R	AI	3	-40°F TO 257°F
CONDENSER FLOW SWITCH STATUS	R	BI	1	0=NO FLOW, 1=FLOW
CONDENSER LEAVING WATER TEMPERATURE	R	AI	4	-40°F TO 257°F
CONDENSER REFRIGERANT PRESSURE	R	AI	99	0 TO 410 PSI
CONDENSER SATURATED REFRIGERANT TEMPERATURE	R	AV	44	-15.16°F TO 185°F
CONDENSER SUCTION REFRIGERANT PRESSURE	R	AI	123	0-131 PSI
COMPRESSOR SUCTION SATURATED REFRIGERANT TEMPERATURE (EACH COMPRESSOR)	R	AV	50	-15.16°F TO 104°F
CONDENSER WATER FLOW RATE	R	AI	147	0 TO 10,0001 GPM
COOL SETPOINT - NETWORK	W	AV	4	35°F-80°F (SET TO 44°F)
EVAPORATOR ENTERING WATER TEMPERATURE	R	AI	1	-40°F TO 257°F
EVAPORATOR FLOW SWITCH STATUS	R	BI	2	0=NO FLOW, 1= FLOW
EVAPORATOR LEAVING WATER TEMPERATURE	R	AI	2	-40°F TO 257°F
EVAPORATOR WATER FLOW RATE	R	AI	148	0 TO 10,0001 GPM
OUTDOOR AIR TEMPERATURE	R	AI	5	-40°F TO 212°F
RUN ENABLED	R	BI	5	0=OFF, 1=RUN ALLOWED
ALARM DIGITAL OUTPUT	R	BI	10	0=NO ALARM, 1= ALARM
ALARM FAULTS	R	AV	901	SEE CONTROL MANUAL
ALARM PROBLEMS	R	AV	900	SEE CONTROL MANUAL
ALARM WARNINGS	R	AV	902	SEE CONTROL MANUAL
CLEAR ALARM NETWORK	W	BV	8	0=NORMAL, 1=CLEAR

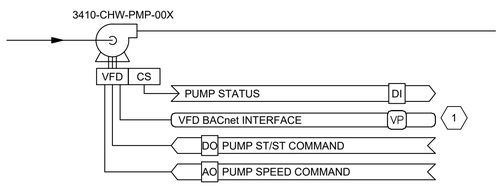

2 CHILLED WATER PUMP CONTROL DIAGRAM

DIAGRAMMATIC

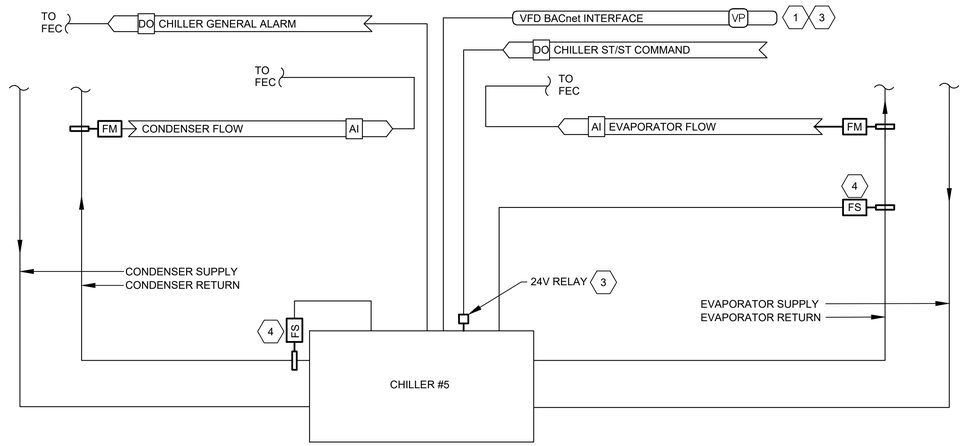

2 CHILLER CONTROL DIAGRAM

DIAGRAMMATIC

GENERAL NOTES

(UNLESS OTHERWISE SPECIFIED)

1. THE CONTROL SYSTEM SHALL BE AN EXTENSION OF THE EXISTING CONTROL SYSTEM LOCATED IN THE BUILDING (JCI).
2. SEE ELECTRICAL DRAWINGS FOR ADDITIONAL INFORMATION.
3. SEE S804449-G0-001 FOR DRAWING LIST, LEGEND, ABBREVIATIONS AND KEY PLAN.
4. SEE S804449-G0-002 THROUGH G0-005 FOR SPECIFICATIONS.

SHEET NOTES

1. CONTRACTOR TO DETERMINE BEST LOCATION TO INTERCEPT MS/TP TRUNK AND CONFIGURE CONDUCTOR IN A DAISY-CHAIN CONFIGURATION. COORDINATE TIE-IN LOCATION WITH FMCS SPECIALIST. CABLE SHALL BE 22 AWG STRANDED 3 WIRE, ANIXTER CBL-22/3-FC-PLN OR EQUAL.
2. PROVIDE 18 AWG, TWISTED PAIR, SHIELDED CABLE (ANIXTER PART NUMBER: CBL-18/2WHT-PLN) FOR CONNECTIONS TO END DEVICES. PROVIDE MINIMUM 3/4" CONDUIT FOR CONTROL WIRING. WHEN CONNECTING TO EXISTING CABLING MATCH EXISTING CABLE COLOR.
3. PROVIDE RELAY IN CHILLER CONTROL CABINET ON DIN RAIL. COORDINATE EXACT LOCATION WITH FMCS SPECIALIST. RELAY SHALL BE 24V AC ALLEN-BRADLEY 700-HK36A24 WITH RELAY BASE 700-HN-121 OR APPROVED EQUAL.
4. THERMAL DISPERSION FLOW SWITCH PER MANUFACTURER REQUIREMENTS.
5. EXISTING SEQUENCE PROVIDED FOR TESTING OF SYSTEM. CONTRACTOR TO ADD CHW-PMP-004 AND CHW-CH-005 TO EXISTING SEQUENCE OF OPERATION AND FOLLOW EXISTING SEQUENCES.

5

CHILLED WATER SYSTEM SEQUENCE OF OPERATION

GENERAL:

1. SETPOINTS DESCRIBED IN THE SEQUENCE OF OPERATION SHALL BE ADJUSTABLE FROM THE GRAPHICAL INTERFACE.
2. PROVIDE MANUAL GRAPHICAL MAINTENANCE SWITCH FOR EACH PUMP AND CHILLER TO REMOVE FROM STARTUP AND OPERATION SEQUENCE.
3. ALARMS SHALL BE INTERLOCKED WITH EQUIPMENT STATUS TO PREVENT NUISANCE ALARMS DURING NORMAL STARTUP AND SHUTDOWN OF SYSTEM.

SYSTEM ENABLE:

1. CHILLED WATER SYSTEM STARTS AUTOMATICALLY WHEN SYSTEM ENABLE IS "ON", AND STOPS WHEN THE SYSTEM ENABLE IS "OFF".
2. THE CHILLERS SHALL OPERATE ON THEIR OWN INTERNAL CONTROLS TO MAINTAIN THE LWT SETPOINT,
3. UPON A COMMAND FROM THE FMCS TO ENABLE THE CHILLED WATER SYSTEM THE FMCS SHALL OPEN THE CHILLER BYPASS VALVE (CHW-CTV-107) THEN START THE LEAD CHILLED WATER PUMP.
4. 2 MINUTES AFTER PROOF OF STATUS FROM THE CHILLED WATER PUMP THE FMCS SHALL ENABLE THE LEAD CHILLER BASED ON THE CHILLER CONTROL SEQUENCE.
5. THE FMCS SHALL CLOSE THE CHILLER BYPASS VALVE (CHW-CTV-107) CONCURRENTLY WITH OPEN THE LEAD CHILLER'S ISOLATION VALVE. LIMIT THE RATE OF CHANGE FOR EACH VALVE TO 1 MINUTE FOR FULL STROKE (FULL CLOSED TO FULL OPEN).

CHILLED WATER PUMP CONTROL (PMP-001 THRU PMP-004): 5

1. UPON A COMMAND TO START, THE FMCS MODULATES THE LEAD PUMP MOTOR SPEED TO MAINTAIN THE DIFFERENTIAL PRESSURE SETPOINT OF 8.0 PSI AS SENSED BY DIFFERENTIAL PRESSURE SENSOR IN BUILDING 3430. UPON LOSS OF SIGNAL FROM SENSOR IN 3430, MODULATE MOTOR SPEED TO MAINTAIN BUILDING 3410 DIFFERENTIAL PRESSURE SETPOINT OF 17.3 PSI (ADJUSTABLE) AT 50% CHILLER PLANT LOAD, RISING TO 54.2 PSI AT 100% CHILLER PLANT LOAD.
2. AFTER START-UP DELAY OF 4 MINUTES, STAGE LAG PUMP(S) ON AND OFF AS REQUIRED TO MAINTAIN THE DIFFERENTIAL PRESSURE SETPOINT. IF LEAD PUMP SPEED RISES TO 100% FOR A PERIOD OF 3 MINUTES, START LAG PUMP. WHEN PUMP SPEED FALLS BELOW 40% WITH TWO PUMPS OPERATING, OR 50% WITH THREE PUMPS OPERATING, STOP THE LAG PUMP.
3. WHEN MULTIPLE PUMPS OPERATE SIMULTANEOUSLY, VFD'S MODULATE PUMP MOTOR SPEEDS IN UNISON TO MAINTAIN DIFFERENTIAL PRESSURE SETPOINT.
4. EVERY TUESDAY AT 8:00AM THE FMCS SHALL ROTATE LEAD, 1ST LAG AND 2ND LAG PUMP DESIGNATIONS WEEKLY TO EQUALIZE PUMP RUNTIME. LEAD, 1ST LAG AND 2ND LAG DESIGNATIONS MAY ALSO BE MANUALLY SET AND ROTATED BY THE OPERATOR. THE FMCS SHALL START THE NEXT LAG PUMP AND PROVE STATUS BEFORE STOPPING THE LEAD PUMP.
5. A SPECIFIC PUMP FAILURE ALARM INITIATES AT THE OPERATOR WORKSTATION ANYTIME THE PUMP STATUS DOES NOT MATCH THE COMMAND FOR MORE THAT 60 SECONDS. THE FMCS DISABLES THE PUMP AND STARTS THE NEXT LAG PUMP. MANUAL RESET OF ALARM IS REQUIRED.

CHILLER STAGING CONTROL:

1. PROVIDE MODE INDICATION ON GRAPHIC FOR LOW LOAD OR HIGH LOAD CHILLER STAGING CONTROL. PROVIDE GRAPHICAL MANUAL SELECTION OF MODE AUTO/LOW LOAD/HIGH LOAD.
2. THE FMCS SHALL ENABLE THE LOW LOAD MODE WHEN THE OA TEMPERATURE IS BELOW 70°F OR THE CALCULATED COOLING TONNAGE DURING THE HIGH LOAD MODE FAILS BELOW 225 TONS FOR MORE THAN 20 MINUTES.

LOW LOAD MODE:

SEE S789008-M7-101 FOR LOW LOAD MODE CONTROL

HIGH LOAD MODE: 5

CHILLER CH-001, CH-002, CH-003, CH-005 CONTROL:

1. IN HIGH LOAD MODE, FMCS SHALL ENABLE CH-001, CH-002, CH-003 ON A LEAD/LAG/LAG OPERATION BASED ON THE FOLLOWING SEQUENCE.
2. UPON A COMMAND TO ENABLE THE LEAD CHILLER, THE FMCS SHALL ENABLE THE CONDENSER WATER SYSTEM AND OPEN THE CHILLER'S ASSOCIATED ISOLATION VALVE PRIOR TO ENABLING THE CHILLER. THE FMCS SHALL ENABLE THE CHILLER ONCE THE CHILLER'S ASSOCIATED FLOW METER IS ABOVE 500 GPM. THE LEAD CHILLER SHALL HAVE A MINIMUM ENABLE TIME OF 30 MINUTES. ONCE ENABLED THE CHILLER'S ON-BOARD INTEGRAL CONTROLS SHALL OPERATE THE CHILLER TO MAINTAIN THE CHILLED WATER SUPPLY TEMPERATURE SETPOINT. THE FMCS SHALL RESET THE CHILLED WATER SUPPLY WATER TEMPERATURE SETPOINT BASED ON THE OA CONDITION. WHEN THE OA IS 90°F THE CHILLED WATER SUPPLY TEMPERATURE SETPOINT SHALL BE 40°F. WHEN THE OA IS 65°F THE HEAT EXCHANGER LEAVING SUPPLY WATER TEMPERATURE SETPOINT SHALL BE 45°F. THE CHILLED WATER SUPPLY TEMPERATURE SETPOINT SHALL BE RESET LINEARLY BETWEEN THESE POINTS AND WILL HAVE A 0.5° HYSTERESIS TO ENABLE A STABLE SETPOINT.
3. AFTER A START-UP DELAY OF 30 MINUTES (ADJUSTABLE), STAGE 1ST LAG AND 2ND LAG CHILLER ON AND OFF SEQUENTIALLY AS REQUIRED TO MEET THE SYSTEM LOAD, AS MEASURED BY CHILLER CURRENT DRAW. IF CHILLER CURRENT DRAW RISES ABOVE 95% FLA (ADJUSTABLE) FOR A PERIOD OF 15 MINUTES (ADJUSTABLE), ENERGIZE THE NEXT LAG CHILLER IN SEQUENCE. WHEN THE AVERAGE CHILLER LOAD DROPS BELOW 40% FLA (ADJUSTABLE) WITH TWO CHILLERS OPERATING, OR 50% FLA (ADJUSTABLE) WITH THREE CHILLERS OPERATING, STOP THE LAG CHILLER.
4. UPON A COMMAND TO ENABLE A LAG CHILLER, THE FMCS SHALL OPEN THE LAG CHILLER'S ASSOCIATED ISOLATION VALVE PRIOR TO ENABLING THE CHILLER. THE FMCS SHALL LIMIT THE RATE AT WHICH CONTROL VALVE FOR LAG CHILLER OPENS TO ENSURE FLOW RATE THROUGH OPERATING CHILLER(S) DOES NOT FALL BELOW CHILLER'S MINIMUM FLOW. THE FMCS SHALL LIMIT VALVE SPEED TO 4 MINUTES FOR FULL STROKE (FULL CLOSED TO FULL OPEN) SUCH THAT RATE OF CHANGE OF FLOW THROUGH CHILLER IS LIMITED TO 200 GPM PER MINUTE MAXIMUM. ENABLE LAG CHILLER WHEN LAG CHILLER'S CONTROL VALVE IS AT 80% OPEN.
5. UPON A COMMAND TO DISABLE A LAG CHILLER, THE FMCS SHALL DISABLE THE LAG CHILLER AND CLOSE THE ASSOCIATED ISOLATION VALVE. THE FMCS SHALL LIMIT THE RATE AT WHICH CONTROL VALVE FOR LAG CHILLER CLOSES TO ENSURE FLOW RATE THROUGH OPERATING CHILLER(S) DOES NOT INCREASE ABOVE THE CHILLER'S MAXIMUM FLOW. THE FMCS SHALL LIMIT VALVE SPEED TO 4 MINUTES FOR FULL STROKE (FULL OPEN TO FULL CLOSED) SUCH THAT RATE OF CHANGE OF FLOW THROUGH CHILLER IS LIMITED TO 200 GPM PER MINUTE MAXIMUM.
6. CALCULATE FLOW RATE USING DIFFERENTIAL PRESSURE SENSOR ACROSS EACH CHILLER EVAPORATOR BARREL. CALCULATED FLOW RATE SHALL BE USED IF ASSOCIATED CHILLER FLOW METER FAILS.
7. FMCS SHALL AUTOMATICLY ROTATE LEAD, 1ST LAG AND 2ND LAG STATUS OF CHILLERS CH-001, 002 AND 003 ON A WEEKLY BASIS TO MAINTAIN CHILLER RUN TIME. PROVIDE GRAPHICAL SELECTION FOR AUTO ROTATE/MANUAL ROTATE TO ALLOW OPERATOR TO INITIATE WHEN ROTATION OCCURS.

SYSTEM BYPASS (CHILLER MINIMUM FLOW) VALVE CTV-105:

1. VALVE IS NORMALLY CLOSED.
2. WHEN CHILLER CH-001, 002 , 003 OR 005 IS ENABLED AND SYSTEM FLOW IS LESS THAN THE CHILLER MINIMUM FLOW RATE (800 GPM WHEN A SINGLE CHILLER IS OPERATING, 1,400 GPM WHEN TWO CHILLERS ARE OPERATING, AND 2,000 GPM WHEN THREE CHILLERS ARE OPERATING), MODULATE VALVE OPEN AS REQUIRED TO BYPASS SYSTEM AND MAINTAIN MINIMUM FLOW THROUGH CHILLER(S).
3. WHEN CHILLER CH-004 IS ENABLED, CLOSE VALVE.

MISCELLANEOUS MONITORING AND CONTROL:

1. CALCULATE AND DISPLAY SYSTEM COOLING LOAD IN TONS USING SYSTEM FLOW RATE AND CHILLED WATER SUPPLY AND RETURN TEMPERATURES.
2. DISPLAY CHW AND CW FLOW RATES FOR CH-005.
3. CALCULATE AND DISPLAY COOLING LOAD IN TONS FOR EACH CHILLER USING USING FLOW RATE AND CHILLED WATER SUPPLY AND RETURN TEMPERATURE AT EACH CHILLER.
4. MONITOR AND DISPLAY DIFFERENTIAL PRESSURE ACROSS EACH CHILLER EVAPORATOR.

CHILLED WATER SIDE STREAM FILTER:

1. WHEN THE CHILLED WATER SYSTEM IS ENABLED, OPEN/CLOSE THE CHILLED WATER FILTER CONTROL VALVE CTV-009 BASED ON A TIME OF DAY SCHEDULE. THE INITIAL SCHEDULE SHALL BE OPEN 6 AM - 10 AM DAILY. FMCS SHALL LIMIT THE SPEED AT WHICH THE VALVE OPENS AND CLOSES; VALVE SHALL REQUIRE 5 MINUTES (ADJUSTABLE) FOR FULL STROKE (FULLY CLOSED TO FULLY OPEN), TO ENSURE OPERATION OF FILTER DOES NOT RESULT IN EITHER A LOW OR HIGH FLOW CONDITION THROUGH ANY OPERATING CHILLER.

LOGIC SYMBOL LIBRARY

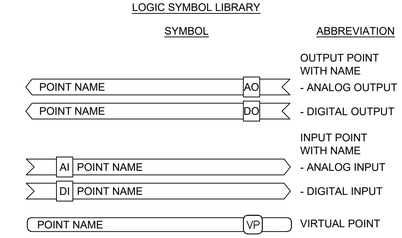

APPROVAL DATE 02/10/2021

REVISIONS DESCRIPTION

DOCUMENT NO S804449-M7-101		SERVICE REQUEST NO S804449
CURRENT REVISION	ORIGINAL	U. S. DEPARTMENT OF ENERGY PACIFIC NORTHWEST SITE OFFICE
DRAWN CA HUGHES	DRAWN CA HUGHES	Pacific Northwest Division — Battelle — Richland, Washington 99352
CHECKED JM SCOTT	CHECKED JM SCOTT	MECHANICAL CHILLER #5 INSTALLATION CONTROLS
DRAFTING CHECKER GT KIRK	DRAFTING CHECKER GT KIRK	
ENGINEER CA HUGHES	ENGINEER CA HUGHES	
APVD DJ DE SMET	APVD DJ DE SMET	
OTHER	OTHER	
OTHER	OTHER	

PROJ TITLE: 3410 CHILLER #5 INSTALLATION

SIZE D | BLDG 3410 | DWG NO M7-101 | REV NO 0

SCALE SHOWN | SHEET 1 OF 1

PLOT NAME: S804449-M7-101.dwg
PLOT DATE: 2/10/2021 4:40pm
PLOT BY: HUGHES, CHRISTOPHER A

PNNL-BATT_D [REV1 8-19-14]

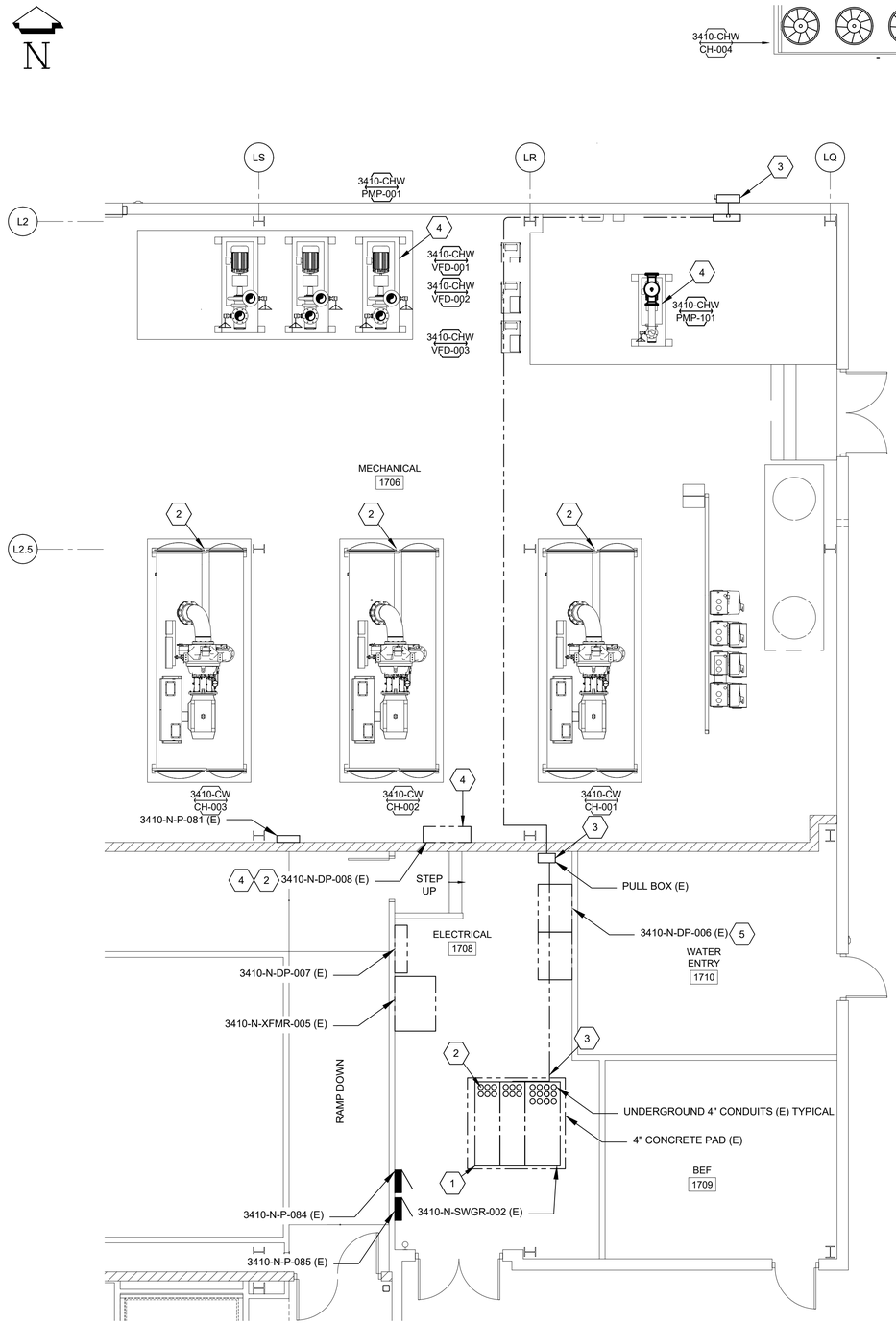

ELECTRICAL DEMOLITION PLAN

SCALE: 3/16" = 1'-0"

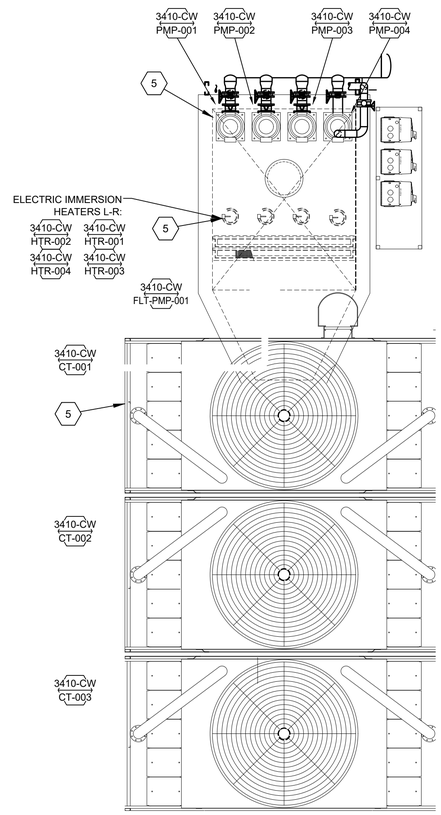

3410-N-DP-008

3410-N-SWGR-002

3410-N-DP-006

NOTES

1. SEE DRAWING G0-002 THROUGH G0-005 FOR SPECIFICATIONS.
2. SEE DRAWING E6-101 FOR ELECTRICAL ONE-LINE.

SHEET NOTES

1. DEMOLISH EXISTING SWITCHGEAR. DEMOLISH SERVICE LATERAL CONDUCTORS FROM SWITCHGEAR MAIN BREAKER (11 SETS OF 4-1000 kCMILS (AL) BACK TO UTILITY TERMINATION ENCLOSURE.
2. RETAIN BELOW GRADE FEEDER CONDUCTORS FOR CHILLERS 001, 002, 003 AND DISTRIBUTION PANELS DP-006 AND DP-008. THESE CONDUCTORS ARE TO BE EXTENDED INTO THE REPLACEMENT SWITCHBOARD -003 DISTRIBUTION SECTION.
3. RETAIN FEEDER CONDUCTORS AND RACEWAY FEEDING CHILLER 004 FOR RECONNECTION TO REPLACEMENT SWITCHBOARD -004 DISTRIBUTION SECTION.
4. DEMOLISH CONNECTIONS TO PANEL DP-008 FOR PUMPS 3410-CHW-PMP-001, 3410-CHW-PMP-101. RETAIN CONDUCTORS FOR CONNECTION TO REPLACEMENT PANEL DP-004.
5. DEMOLISH CONNECTIONS TO PANEL DP-006 EQUIPMENT FOR 3410-CW-CT-001, 3410-CW-PMP-001, 3410-CW-HTR-001. RETAIN CONDUCTORS FOR CONNECTION TO REPLACEMENT SWITCHBOARD-004.

APPROVAL DATE 02/10/2021

DOCUMENT NO S804449-D1-101		SERVICE REQUEST NO S804449
CURRENT REVISION	ORIGINAL	U. S. DEPARTMENT OF ENERGY PACIFIC NORTHWEST SITE OFFICE
DRAWN BJ GRAF	DRAWN BJ GRAF	Pacific Northwest Division — Battelle — Richland, Washington 99352
CHECKED KB HAMMOND	CHECKED KB HAMMOND	ELECTRICAL CHILLER #5 INSTALLATION DEMOLITION PLAN
DRAFTING CHECKER GT KIRK	DRAFTING CHECKER GT KIRK	
ENGINEER BJ GRAF	ENGINEER BJ GRAF	
APVD DJ DESMET	APVD DJ DESMET	
OTHER	OTHER	PROJ TITLE 3410 CHILLER #5 INSTALLATION
OTHER	OTHER	SIZE D — BLDG 3410 — DWG NO D1-101 — REV NO 0
		SCALE SHOWN — SHEET 1 OF 1

REVISIONS DESCRIPTION

PNNL-BATT_D [REV1 8-19-14]

PLOT NAME: S804449-D1-101.dwg
PLOT DATE: 2/10/2021 2:42pm
PLOT BY: HUGHES, CHRISTOPHER A

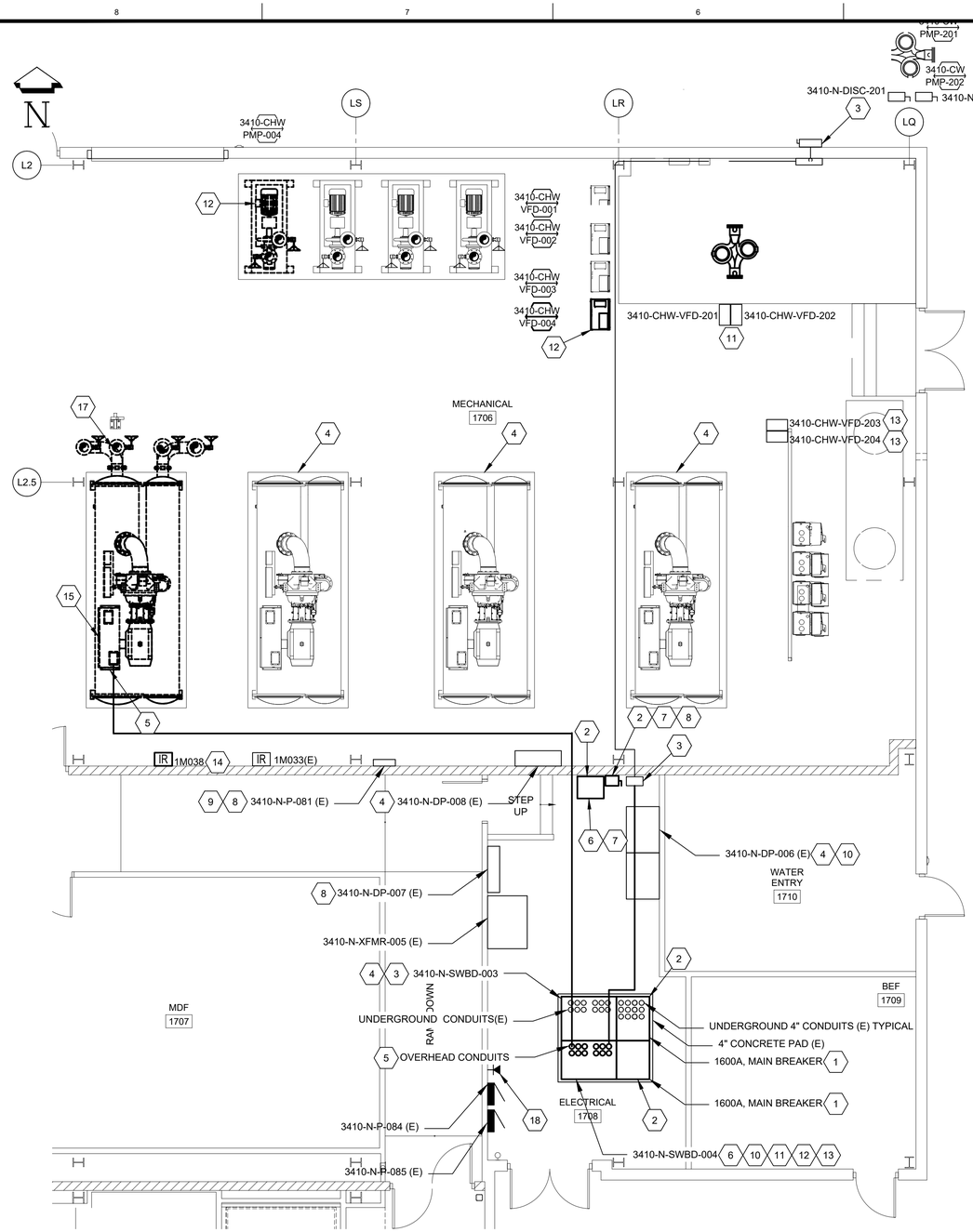

ELECTRICAL INSTALLATION PLAN

SCALE: 3/16" = 1'-0"

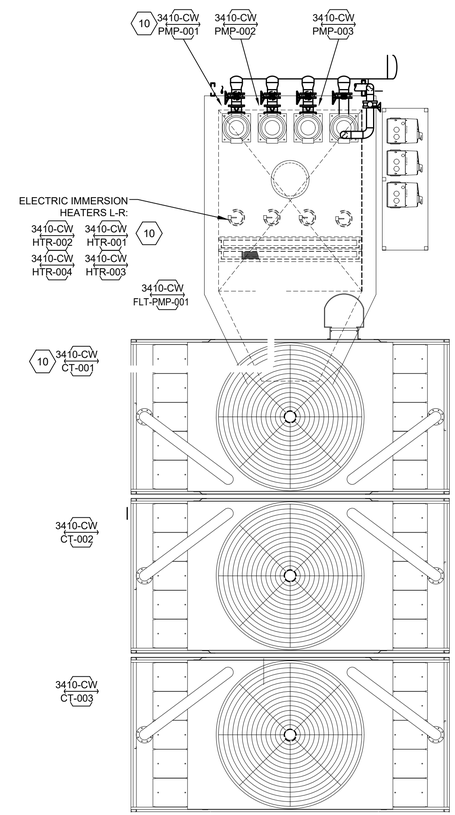

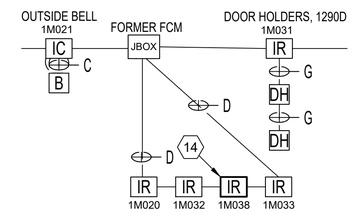

RISER DIAGRAM

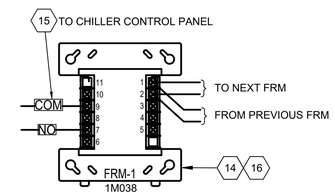

FRM MODULE DIAGRAM

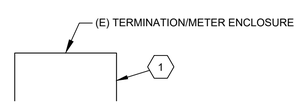

NOTES

1. SEE PAGE G0-005 FOR SPECIFICATIONS.
2. SEE PAGE E6-101 F0R ONE LINE DIAGRAM.

SHEET NOTES

1. INSTALL 4 SETS OF 4-500 KCMIL (CU) IN EXISTING CONDUITS FROM THE EXISTING CITY OF RICHLAND (COR) UTILITY METERING/TERMINATION ENCLOSURE TO THE 1600A MAIN BREAKERS LINE SIDE LUGS/TERMINATIONS AND TERMINATE.
2. INSTALL THE OWNER-FURNISHED ELECTRICAL EQUIPMENT (SWITCHBOARDS, MAIN BREAKER, TRANSFORMER, TRANSFER SWITCH). EXTEND EXISTING CIRCUITS AS NEEDED.
3. INTERCEPT CONDUCTORS FEEDING CHILLER #4 AT EXISTING PULL BOX AND EXTEND TO LOAD SIDE TERMINALS OF 600A BREAKER IN NEW SWITCHBOARD. RE-LABEL DISCONNECT SWITCH POWER SOURCE.
4. PROVIDE SPLICES TO RECONNECT (3410--CHW-CH-001, -002, -003, 3410-DP-006, 3410-DP-008) TO REPLACEMENT SWITCHBOARD-003. EXTEND CIRCUITS TO LOAD SIDE OF BREAKERS AS INDICATED ON E6-101.
5. ROUTE 2 SETS OF 400 kCMIL,1-#3G IN 2.5" CONDUITS FROM 400A BREAKERS IN DISTRIBUTION SECTION TO THE LOAD SIDE TERMINALS OF CHILLER (3410-N-CHWL-005) . USE FLEXIBLE CONDUIT AT CHILLER. PROVIDE CIRCUIT LABEL AT CHILLER DISCONNECT SWITCH.
6. ROUTE 3-#6, 1-#10G IN 1.5" C FROM SWBD-004, 50A, 3-P, BREAKER TO PRIMARY LUGS OF 30 KVA (480:208/Y 120, VAC) TRANSFORMER. MOUNT TRANSFORMER TO EXISTING PAD WITH 1-3/4" EMBEDMENT STUDS. GROUND XO LUG TO EXISTING BUILDING GROUND GRID.
7. ROUTE 4-#3, 1-#8G CONDUCTORS IN 1.5" C FROM TRANSFORMER SECONDARY LUGS TO 250V, HEAVY DUTY, 3-P,4-W WITH NEUTRAL AND 100A CLASS J FUSES TRANSFER SWITCH. TERMINATE CONDUCTORS ON LINE SIDE TERMINALS. SWITCH IS TO BE MOUNTED WITH ENCLOSURE BOTTOM AT 36" AFF.
8. INTERCEPT/SPICE EXISTING CONDUCTORS FEEDING PANEL N-P-081 AT BREAKER CB-01 IN PANEL DP-007. RETAIN CONDUCTORS AND SPLICE AS NEEDED TO EXTEND 4-#3, 1-#8G CONDUCTORS IN 1.5" C TO MANUAL TRANSFER SWITCH LINE SIDE TERMINALS.
9. ROUTE 4-#3, 1-#8G CONDUCTORS IN 1.5" C FROM MANUAL TRANSFER SWITCH LOAD TERMINALS TO PANEL N-P-081 INCOMING LUGS AND TERMINATE.
10. EXTEND CIRCUITS FOR CW-CT-001, CW-PMP-001, CW-HTR-001 FROM DP-006 TO SWITCHBOARD-004, (SPLICE AS NEEDED).
11. ROUTE 3-#6, 1-#10G CONDUCTORS IN 1.25" C FROM 50A, 3-P, BREAKERS IN SWBD-004 TO LINE SIDE ASD (ADJUSTABLE SPEED DRIVE) INPUT LUGS AND TERMINATE.
12. ROUTE 3-#3, 1-#6G IN 1.25" C FROM 100A BREAKER IN SWITCHBOARD-004 TO LINE SIDE OF ASD FOR 3410-VFD-205 AND TERMINATE. ROUTE 3-#3, 1-#6G IN 1.25" C FROM LOAD SIDE TERMINALS OF ASD AND TERMINATE ON PUMP 3410-CW-PMP-005.
13. ROUTE 3-#8, 1-#10G CONDUCTORS IN 1.25" C FROM 40A, 3-P, BREAKERS IN SWBD-004 TO LINE SIDE ASD (ADJUSTABLE SPEED DRIVE) INPUT LUGS AND TERMINATE.
14. PROVIDE NOTIFIER FRM (CONTROL MODULE) WITH 4" SQUARE BOX FOR CHILLLER #5. MOUNT AT +48" AFF MIN. PROVIDE ONE (1) PAIR OF #16AWG TWISTED, NON-SHIELDED, FIRE-RATED CONDUCTORS (FPLP) IN 1/2" EMT CONDUIT FROM EXISTING IR SIGNAL CIRCUIT TO CHILLER SHUT DOWN FRM.
15. PROVIDE 2-#14 CONDUCTORS IN 1/2" EMT CONDUIT FROM FRM NORMALLY OPEN CONTACTS (TERMINALS 31 AND 22) TO CHILLER CONTROL PANEL SHUTDOWN TERMINALS (VERIFY TERMINALS WITH EQUIPMENT MANUFACTURER LITERATURE).
16. MODIFY SEQUENCE OF OPERATIONS: UPON DETECTION OF A REFRIGERANT LEAK, WHEN THE REFRIGERANT LEAK DETECTION SYSTEM IS IN "ALARM MODE" THE FRM SHALL SHUTDOWN THE ASSOCIATED CHILLER. ADT (RED HAWK) TO UPDATE THE PROGRAMMING OF THE FACP.
17. EXTEND 3-#12 IN 3/4" CONDUIT FROM EXISTING CONTROL VALVE (3410-CW-CTV-108) TO NEW CONTROL VALVES (3410-CW-CTV-00x AND 3410-CW-CTV-00x). EXISTING CONTROL VALVE IS FED FROM PANEL N-P-081.
18. CONNECT SWITCHBOARD METERING TO EXISTING DATA DROP JACK. A SPLITTER WILL BE REQUIRED.

APPROVAL DATE 02/10/2021

DOCUMENT NO S804449-E1-101		SERVICE REQUEST NO S804449
CURRENT REVISION	ORIGINAL	U. S. DEPARTMENT OF ENERGY PACIFIC NORTHWEST SITE OFFICE
DRAWN BJ GRAF	DRAWN BJ GRAF	Pacific Northwest Division — Battelle — Richland, Washington 99352
CHECKED KB HAMMOND	CHECKED KB HAMMOND	ELECTRICAL CHILLER #5 INSTALLATION INSTALLATION PLAN
DRAFTING CHECKER GT KIRK	DRAFTING CHECKER GT KIRK	
ENGINEER BJ GRAF	ENGINEER BJ GRAF	
APVD DJ DE SMET	APVD DJ DE SMET	
OTHER	OTHER	PROJ TITLE 3410 CHILLER #5 INSTALLATION
OTHER	OTHER	SIZE D · BLDG 3410 · DWG NO E1-101 · REV NO 0
REVISIONS DESCRIPTION		SCALE SHOWN · SHEET 1 OF 1

PNNL-BATT_D [REV1 8-19-14]

PLOT NAME: S804449_E1-101.dwg
PLOT DATE: 2/10/2021 4:29pm
PLOT BY: HUGHES, CHRISTOPHER A

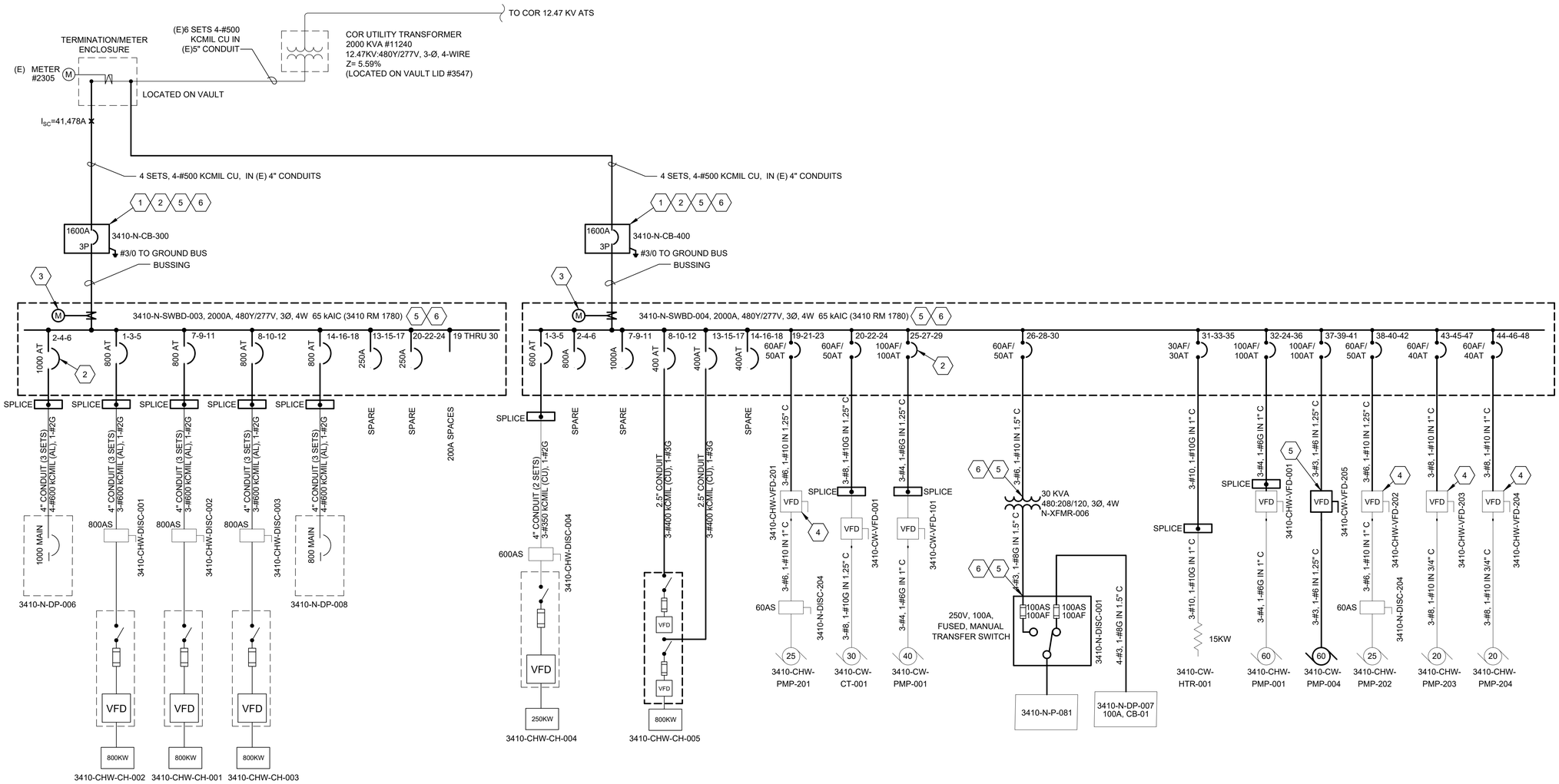

REVISED ONE-LINE

GENERAL NOTES

(UNLESS OTHERWISE SPECIFIED)

1. SEE E1-101 FOR ELECTRICAL INSTALLATION PLAN.
2. SEE D1-101 FOR ELECTRICAL DEMOLITION PLAN.
3. SEE G0-005 FOR ELECTRICAL SPECIFICATIONS.

SHEET NOTES

1. PROVIDED WITH RELT, SURGE PROTECTION DEVICE, LSIG SETTINGS AT SERVICE ENTRANCE DISCONNECTING MEANS. PROVIDE LABEL/STICKER WITH AVAILABLE SHORT CIRCUIT VALUE AS WELL AS LABEL WITH SERVICE DISCONNECT 1 AND 2. SET BREAKER TRIP TO 1520A. ADD LABEL TO BREAKER INDICATING THAT THE MAXIMUM TRIP SETTING IN 1520A.
2. PROVIDE BREAKER LOCK-OUT HARDWARE FOR ALL BREAKERS TYPICAL.
3. CONNECT METER TO EXISTING BUILDING MANAGEMENT CONTROL SYSTEM. UTILIZE ETHERNET CONNECTION ON METER.
4. THESE CONNECTIONS AND EQUIPMENT ARE ASSOCIATED WITH DRAWING S789008-E1-101.
5. PROVIDE EQUIPMENT IDENTIFICATION LABELS ON ALL ELECTRICAL EQUIPMENT.
6. EQUIPMENT FURNISHED BY BATTELLE.

APPROVAL DATE 02/10/2021

DOCUMENT NO S804449-E6-101		SERVICE REQUEST NO S804449
CURRENT REVISION	ORIGINAL	U. S. DEPARTMENT OF ENERGY PACIFIC NORTHWEST SITE OFFICE
DRAWN BJ GRAF	DRAWN BJ GRAF	Pacific Northwest Division — Battelle — Richland, Washington 99352
CHECKED KB HAMMOND	CHECKED KB HAMMOND	ELECTRICAL CHILLER #5 INSTALLATION ONE-LINE DIAGRAM
DRAFTING CHECKER GT KIRK	DRAFTING CHECKER GT KIRK	
ENGINEER BJ GRAF	ENGINEER BJ GRAF	
APVD DJ DE SMET	APVD DJ DE SMET	PROJ TITLE 3410 CHILLER #5 INSTALLATION
OTHER	OTHER	SIZE D — BLDG 3410 — DWG NO E6-101 — REV NO 0
OTHER	OTHER	SCALE SHOWN — SHEET 1 OF 1

REVISIONS DESCRIPTION

PLOT NAME: S804449-E6-101.dwg
PLOT DATE: 2/10/2021 4:29pm
PLOT BY: HUGHES, CHRISTOPHER A.

PNNL-BATT_D [REV1 8-19-14]

S804449 - 3410 CUP Chiller #5 Installation S789008 - Chiller (Air-Cooled) Redundant CHW Pump Installation

MASTER SUBMITTAL LOG

Spec Section Numb	Spec Section Description	Title	Description
GENERAL REQUIREMENTS			
012000	PAYMENT PROCEDURES	Schedule of Values	Pre-Const. 14 days from NOA.
013000	ADMINISTRATIVE REQUIREMENTS	Training and Access Requirements for Contractor Personnel	Pre-Const. 5 Days from NOA & requires resubmittal each time a new individual is added to the job.
013200	CONSTRUCTION PROGRESS DOCUMENTATION	Construction Schedule	Pre-Const. 14 days from NOA.
014000	QUALITY REQUIREMENTS	Welding Procedure Spec. (WPS), Procedure Qual. Test Record (PQR), Welder Qual. Test Rec. & Continuity Log	Submit 10 days prior to scope of work being performed.
014000	QUALITY REQUIREMENTS	Certified Welding Inspector (CWI), American Weld Inspection Certificate & Eye Exam	Please submit 15 days after NOA.
014000	QUALITY REQUIREMENTS	Visual Inspection Procedure	Submit 15 days from NOA.
014000	QUALITY REQUIREMENTS	Electrical Inspection	Submit 5 days after inspection completion from a NEC Qualified Code Inspector.
016000	ENVIRONMENTAL, SAFETY AND HEALTH	Contractors Job Safety Analysis (JSA)	Pre-Const. 5 days from NOA. Change of means or method requires resubmittal.
016000	ENVIRONMENTAL, SAFETY AND HEALTH	Letter of Confirmation (CESH Compliance)	Pre-Const. 5 days from NOA.
016000	ENVIRONMENTAL, SAFETY AND HEALTH	Declaration of Key Supervisor(s)	Pre-const. 5 days from NOA.
016000	ENVIRONMENTAL, SAFETY AND HEALTH	Site Safety Orientation/COVID-19 Control Plan	Pre-Const. 5 days from NOA.
016000	ENVIRONMENTAL, SAFETY AND HEALTH	Basic Lift Plan	Pre-Const. 5 days from NOA.
016000	ENVIRONMENTAL, SAFETY AND HEALTH	Silica Exposure Control Plan	Pre-const. 15 days after NOA.
016000	ENVIRONMENTAL, SAFETY AND HEALTH	Injury/Illness Report	Submit 5 days after project completion.
017600	ENVIRONMENTAL PROTECTION AND WASTE MANAGEMENT	Refrigerant Technician Certifications	Submit for information to Battelle, no less than 3 working days before performing the work. Copies of all EPA certification cards or wall certificates for contractor technicians working on all Battelle facilities. Provide copies of the certifications and the completed Contractor Technician form and Technician Input form, provided by Battelle.
017600	ENVIRONMENTAL PROTECTION AND WASTE MANAGEMENT	Recovery Equipment Certified ARL/UL	Submit for information to Battelle, no less than three (3) working days before performing the work, documentation that the recovery equipment to be used for contaminated oil/refrigerant recovery has been certified by ARL/UL to meet EPA's minimumrequirements for recycling and/or recovery.
017600	ENVIRONMENTAL PROTECTION AND WASTE MANAGEMENT	Service Order Form and Appliance Input Form	When removing contaminated oil or performing refrigerant recovery, document refrigerant removal and additions using the Service Order form and Appliance Input form. provided by Battelle. The completed form shall be submitted to Battelle as part of the project closeout records.
017600	ENVIRONMENTAL PROTECTION AND WASTE MANAGEMENT	Battelle Construction & Demolition Waste-Recycling Form	Submit for information to Battelle, upon Substantial Completion, estimated or actual total weights of demolition waste and recycled/reused materials. Submit using Battelle Construction & Demolition Waste-Recycling form.
017800	COMPLETION, ACCEPTANCE AND CLOSEOUT	Record Drawings/As-Built Drawings	Submit 1 set of marked-up Record Prints.
017800	COMPLETION, ACCEPTANCE AND CLOSEOUT	Warranties	Submit written warranties, prior to the Request for Final Acceptance or Transfer for Beneficial Occupancy. Organize warranty documents into an orderly sequence with a table of contents.
GENERAL MECHANICAL			
200500	COMMON MECHANICAL WORK REQUIREMENTS	O&M Manual	Submit 5 days after project completion the operation and maintenance manuals.
200500	COMMON MECHANICAL WORK REQUIREMENTS	As-Built Drawings	1.2.2. AS-BUILT DRAWINGS
200523	GENERAL DUTY MECHANICAL VALVES	Product Data for Each Type of Valve Indicated	Submit product data for each type of valve indicated.
200529	HANGARS AND SUPPORTS FOR MECHANICAL PIPING, DUCTS AND EQUIPMENT	Product Data for Each Type of Product Used	Submit 15 days from NOA.
200553	IDENTIFICATION FOR MECHANICAL PIPING AND EQUIPMENT	Product Data for Each Type of Label Indicated	Submit 15 days from NOA.
200553	IDENTIFICATION FOR MECHANICAL PIPING AND EQUIPMENT	Valve Schedule	Provide for each piping system.
200700	MECHANICAL INSULATION	Product Data for Each Type of Material Indicated	Submit product data for each type of material indicated.
HEATING, VENTILATION, AND AIR CONDITIONING			
230800	TESTING AND BALANCING	TAB AGENCY QUALIFICATIONS	Submit Testing & Balancing Agency Qualifications.
230800	TESTING AND BALANCING	TAB Agency Test Forms and Test Plan	Submit Testing & Balancing Test Forms & Test Plan.
230800	TESTING AND BALANCING	Certified TAB Report	Submit Final Certified Testing & Balancing Report.
230900	INSTRUMENTATION AND CONTROL FOR HVAC	Product Data, Shop Drawings, and Functional Performance Testing Plan	1.2.1. PRODUCT DATA: INCLUDE MANUFACTURER'S TECHNICAL LITERATURE FOR EACH CONTROL DEVICE. INDICATE DIMENSIONS, CAPACITIES, PERFORMANCE CHARACTERISTICS, ELECTRICAL CHARACTERISTICS, AND INSTALLATION AND STARTUP INSTRUCTIONS FOR EACH TYPE OF PRODUCT INDICATED. 1.2.2. SHOP DRAWINGS: INCLUDE SYSTEM ARCHITECTURE DIAGRAM, EQUIPMENT SCHEDULES, AND SYSTEM CONTROL DRAWINGS. INCLUDE LIST OF CONTROL POINTS TO BE MAPPED FROM COMMUNCATION INTERFACES. 1.2.3. FUNCTIONAL PERFORMANCE TESTING PLAN 1.2.3.1. SUBMIT A TESTING PLAN FOR FOR START-UP AND FUNCTIONAL TESTING TO DEMONSTRATE INSTALLATION IS COMPLETE AND COMPONENTS PERFORM AS SPECIFIED. PLAN SHALL BE APPROVED BY BATELLE PRIOR TOIMPLEMENTATION. THE TEST PLAN FOR THIS WORK MAY BE COMBINED WITH WORK UNDER S804449 (CHILLER #5) INTO A SINGLE COMPREHENSIVE PLAN.
230900	INSTRUMENTATION AND CONTROL FOR HVAC	Completed Test Report	1.2.3.2. AFTER SUCCESSFUL TESTING, SUBMIT COMPLETED TEST REPORT.
230900	INSTRUMENTATION AND CONTROL FOR HVAC	As-Built Drawings	1.2.4. AS-BUILT DRAWINGS: UPDATE SHOP DRAWINGS TO REFLECT ANY CHANGES DURING CONSTRUCTION.
230900	INSTRUMENTATION AND CONTROL FOR HVAC	O&M Data	1.2.5. OPERATION AND MAINTENANCE DATA: FOR HVAC INSTRUMENTATION AND CONTROL SYSTEM TO INCLUDE IN OPERATION AND MAINTENANCE MANUAL.
230913	VARIABLE FREQUENCY/ADJUSTABLE SPEED DRIVES	Start-Up Reports	1.1. SUBMITTALS: START-UP REPORTS.
232113	HYDRONIC PIPING	Product Data for Each Type of Piping, Fittings, Valves and Specialties Indicated	1.3.1. PRODUCT DATA FOR EACH TYPE OF PIPING, FITTINGS, VALVES AND SPECIALTIES INDICATED.
232113	HYDRONIC PIPING	Leak Test Report	1.3.2. LEAK TEST REPORT.
ELECTRICAL			
260500	BASIC ELECTRICAL MATERIALS AND METHODS	Conductor Insulation Resistance Test Documentation	1.15.4. SUBMIT TESTING DOCUMENTATION FOR CONDUCTOR INSULATION RESISTANCE TEST AND CORRECT VOLTAGE TEST.
260523	CONTROL VOLTAGE ELECTRICAL POWER CABLES	Product Data for Each Type of Product	1.1. SUBMITTALS: PRODUCT DATA FOR EACH TYPE OF PRODUCT.

PROJECT S789008

CHILLER (AIR-COOLED) REDUNDANT CHW PUMP INSTALLATION

Pacific Northwest NATIONAL LABORATORY

SHEET INDEX

GENERAL

G0-001 TITLE SHEET, LEGEND AND ABBREVIATIONS
G0-002 SPECIFICATIONS
G0-003 SPECIFICATIONS
G0-004 SPECIFICATIONS

DEMOLITION

D1-101 MECHANICAL DEMOLITION PLAN

MECHANICAL

M1-101 PIPING INSTALLATION PLAN
M6-101 EQUIPMENT SCHEDULES AND DETAILS
M7-101 CONTROLS AND SEQUENCE OF OPERATION

ELECTRICAL

E1-101 INSTALLATION PLAN, DETAILS AND ONE-LINE DIAGRAM

ABBREVIATIONS

(NOT ALL LISTED APPLY TO PROJECT)

A	AMPERE
AC	ALTERNATING CURRENT
AFF	ABOVE FINISHED FLOOR
AIC	AMPERES INTERRUPTING CAPACITY
AR	ARGON
ASD	ADJUSTABLE SPEED DRIVE
AUX	AUXILIARY
BATTELLE	BATTELLE MEMORIAL INSTITUTE, PACIFIC NORTHWEST DIVISION (BATTELLE)
BLDG	BUILDING
BFBI	BATTELLE FURNISHED, BATTELLE INSTALLED
BFCI	BATTELLE FURNISHED, CONTRACTOR INSTALLED
BTU	BRITISH THERMAL UNIT
CA	COMPRESSED AIR
CB	CIRCUIT BREAKER
CFM	CUBIC FEET PER MINUTE
CHWR	CHILLED WATER RETURN
CHWS	CHILLED WATER SUPPLY
CKT	CIRCUIT
CFCI	CONTRACTOR FURNISHED, CONTRACTOR INSTALLED
CM	CONSTRUCTION MANAGER
CNDS	CONDENSATE
COMM	COMMUNICATIONS
CONC	CONCRETE
CU	COPPER
CW	CONDENSER WATER
DEMO	DEMOLISH
DIA	DIAMETER
DIAG	DIAGRAM(S)
DISC	DISCONNECT
DIW	DEIONIZED WATER
DWV	DRAIN WASTE VENT
(E)/EXST	EXISTING
EA	EACH
ELEC	ELECTRICAL
EMT	ELECTRICAL METALLIC TUBING
EW	EYEWASH WATER
FACP	FIRE ALARM CONTROL PANEL
FAC	FIELD APPLICATION CONTROLLER
FCO	FLOOR CLEANOUT
FEC	FIELD EQUIPMENT CONTROLLER
FH	FUME HOOD
FLR	FLOOR
FMCS	FACILITY MANAGEMENT CONTROL SYSTEM
FPM	FEET PER MINUTE
FT	FEET
GA	GAUGE
GFCI	GROUND FAULT CIRCUIT INTERRUPT
GND	GROUND
GWB	GYPSUM WALL BOARD
HE	HELIUM
HHWR	HEATING HOT WATER RETURN
HHWS	HEATING HOT WATER SUPPLY
HP	HORSE POWER
HR	HOUR
HRW	HEAT RECOVERY WATER
HVAC	HEATING, VENTILATION & AIR CONDITIONING
HVE	HEATING VENTILATION EXHAUST
HVR	HEATING VENTILATION RETURN
HVS	HEATING VENTILATION SUPPLY
HZ	HERTZ
IN	INCHES
KAIC	KILO-AMPERES INTERRUPTING CAPACITY
LAN	LOCAL AREA NETWORK
LCP	LOCAL CONTROL PANEL
LFPM	LINEAR FEET PER MINUTE
LTG	LIGHTING
MAX	MAXIMUM
MBH	THOUSAND BTU PER HOUR
MECH	MECHANICAL
MIN	MINIMUM
MTG	MOUNTING
N2	NITROGEN
NEC	NATIONAL ELECTRICAL CODE
NG	NATURAL GAS
NO	NITROUS OXIDE
O2	OXYGEN
OC	ON CENTER
OCC	OCCUPANCY
OH	OVERHEAD
OPP	OPPOSITE
OS	OCCUPANCY SENSOR
P/PWR	POWER
PH	PHASE
PL	PLACES
PNL	PANEL/PANELBOARD
PNNL	PACIFIC NORTHWEST NATIONAL LABORATORY
PR	PROPANE
PROVIDE	FURNISH & INSTALL
PSF	PER SQUARE FOOT
PSI	POUNDS PER SQUARE INCH
PSIG	POUNDS PER SQUARE INCH GAUGE
PTW	POTABLE WATER
PVC	POLYVINYL CHLORIDE
REC	RECEPTACLE
RFI	REQUEST FOR INFORMATION
RGS	RIGID GALVANIZED STEEL
RM	ROOM
SAN	SANITARY SEWER
SATC	SUSPENDED ACOUSTIC TILE CEILING
SCHED	SCHEDULE(S)
SIM	SIMILAR
SST	STAINLESS STEEL (OR SS)
SV	SANITARY VENT
SVC	SERVICE
TYP	TYPICAL
UC	UNDER COUNTER
UNO	UNLESS NOTED OTHERWISE
UPS	UNINTERRUPTIBLE POWER SUPPLY
V	VOLT/VOLTMETER
VA	VOLT AMPERE
VAC	LAB VACUUM
VAV	VARIABLE AIR VOLUME
VFD	VARIABLE FREQUENCY DRIVE
VP	VACUUM POT
W	WATT/WATTMETER
WCO	WALL CLEAN OUT
wg	WATER GAUGE
WP	WEATHERPROOF

GENERAL SYMBOLS LEGEND

- EXISTING BUILDING OR STRUCTURE
- EXISTING EQUIPMENT
- DEMO
- PROJECT WORK
- DETAIL TAG (1 / -)
- EQUIPMENT TAG (1)
- SHEET NOTE (1)
- SECTION TAG (A / -)
- ELEVATION TAG (A / -)
- GRID LINE (A)
- ROOM NUMBER (1234)
- REVISION TAG (1a)
- CONNECT TO EXISTING

PROJECT INFORMATION

PROJECT DESCRIPTION:
MODIFY PIPING AND PUMPS SERVING AIR-COOLED CHILLER CH-004 TO PROVIDE HYDRAULIC ISOLATION OF THE CHILLER FROM THE PSF PRIMARY CHILLED WATER SYSTEM, REPLACE THE HEAT EXCHANGER, AND INSTALL CHILLER PUMPS.

PROJECT ADDRESS:
622 HORN RAPIDS ROAD, RICHLAND, WA 99352

OWNER INFORMATION:
OWNER: DEPARTMENT OF ENERGY/BATTELLE
CONTACT: JEFF PITTMAN
CAMPUS DEVELOPMENT AND NUCLEAR OPERATIONS
902 BATTELLE BOULEVARD
P.O. BOX 999, MSIN J2-33
PHONE: 509-371-7056

CODE SUMMARY

APPLICABLE CODES: 2015 INTERNATIONAL MECHANICAL CODE
2017 NFPA 70, NATIONAL ELECTRICAL CODE

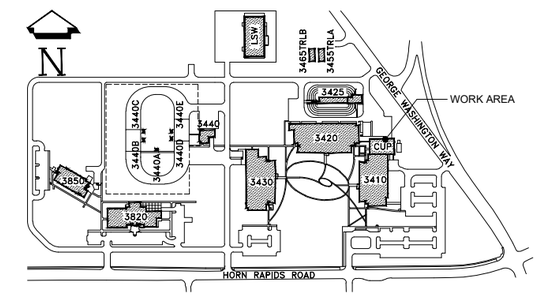

SITE PLAN
SCALE: NONE

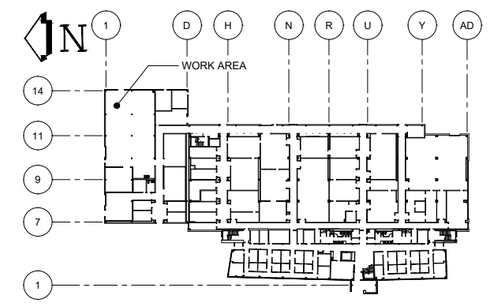

FIRST FLOOR KEY PLAN
SCALE: NONE

APPROVAL DATE 02/09/2021

CURRENT REVISION	ORIGINAL
DRAWN JM SCOTT	DRAWN JM SCOTT
CHECKED DK CREVIER	CHECKED DK CREVIER
DRAFTING CHECKER SD BURNETT	DRAFTING CHECKER SD BURNETT
ENGINEER JM SCOTT	ENGINEER JM SCOTT
APVD DJ DE SMET	APVD DJ DE SMET
OTHER	OTHER
OTHER	OTHER

REVISIONS DESCRIPTION

DOCUMENT NO S789008-G0-001 | SERVICE REQUEST NO S789008

U. S. DEPARTMENT OF ENERGY
PACIFIC NORTHWEST SITE OFFICE

Pacific Northwest Division — Battelle — Richland, Washington 99352

GENERAL
TITLE SHEET
LEGEND AND ABBREVIATIONS

PROJECT TITLE: CHILLER (AIR-COOLED) REDUNDANT CHW PUMP INSTALLATION

SIZE	BLDG	DWG NO	REV NO
D	3410	G0-001	0

SCALE SHOWN | SHEET 1 OF 1

PLOT NAME: S789008-G0G001.dwg
PLOT DATE: 5/18/21 10:29am
PLOT BY: SCOTT, JEFFERY M

PNNL-BATT_D [REV1 8-31-18]

SPECIFICATIONS
(UNLESS OTHERWISE NOTED)

DIVISION 20 - GENERAL MECHANICAL

200500 COMMON MECHANICAL WORK REQUIREMENTS

1. GENERAL

1.1. THIS SECTION APPLIES TO WORK OF DIVISIONS 20 AND 23.

1.2. SUBMITTALS:

1.2.1. OPERATION AND MAINTENANCE MANUALS

1.2.2. AS-BUILT DRAWINGS

1.2.3. WELDING PROCESSES AND WELDER QUALIFICATIONS

1.2.4. LEAK AND PRESSURE TESTING PROCESSES AND FORMS.

1.3. MATERIALS SHALL BE AS SPECIFIED OR BATTELLE ENGINEER APPROVED.

1.4. CONSTRUCTION CHANGES SHALL BE PER AN ENGINEERING CHANGE NOTICE (ECN) OR RED-LINE CHANGE PROCESS (ADM-057).

1.5. SCOPE OF WORK: PROVIDE SYSTEMS SHOWN AND SPECIFIED, COMPLETE IN EVERY RESPECT AND FULLY FUNCTIONAL.

1.6. CODES AND STANDARDS: WORK SHALL BE IN STRICT ACCORDANCE WITH THE MOST CURRENT EDITION OF THE MECHANICAL CODE, NATIONAL ELECTRICAL CODE, AND APPLICABLE STATE AND LOCAL CODES, LAWS, AND ORDINANCES. IN CASE OF CONFLICT WITH DRAWINGS OR SPECIFICATIONS, THE CODES AND ORDINANCES GOVERN.

1.7. CORRECTION OF WORK: PROMPTLY CORRECT WORK REJECTED FOR FAILING TO CONFORM TO THE REQUIREMENTS OF THE SPECIFICATION WHETHER OBSERVED BEFORE OR AFTER SUBSTANTIAL COMPLETION AND WHETHER OR NOT FABRICATED, INSTALLED, OR COMPLETED. THE CONTRACTOR IS SOLELY RESPONSIBLE FOR CORRECTING SUCH REJECTED AND NONCONFORMING WORK INCLUDING ADDITIONAL TESTING AND INSPECTIONS.

1.8. MANUFACTURER'S DATA AND INSTRUCTIONS: INSTALL WORK IN STRICT COMPLIANCE WITH THE MANUFACTURER'S WRITTEN INSTRUCTIONS.

1.9. INSPECTION: VERIFY INSTALLATION CONDITIONS AS SATISFACTORY TO RECEIVE WORK. DO NOT START WORK UNTIL UNSATISFACTORY CONDITIONS ARE CORRECTED. BEGINNING WORK CONSTITUTES ACCEPTANCE OF CONDITIONS AS SATISFACTORY.

1.10. SERVICE INTERRUPTIONS: OBTAIN BATTELLE'S WRITTEN APPROVAL PRIOR TO INTERRUPTING ANY SERVICE INCLUDING WATER, ELECTRICAL, ETC.

1.11. SUBMITTALS: IN ACCORDANCE WITH DIVISION 1.

1.12. INTENT AND INTERPRETATION

1.12.1. THE DRAWINGS AND SPECIFICATIONS SUPPLEMENT EACH OTHER AND DETAILS CONTAINED IN ONE SHALL BE INCLUDED AS IF CONTAINED IN BOTH. PROVIDE ITEMS OR COMPONENTS NOT SPECIFICALLY IDENTIFIED ON THE DRAWINGS OR SPECIFICATIONS THAT ARE REQUIRED TO MAKE FULLY FUNCTIONAL ASSEMBLIES. IN CASE OF CONFLICT BETWEEN DRAWINGS AND/OR SPECIFICATIONS, THE MOST STRINGENT REQUIREMENT SHALL BE MET.

1.12.2. THE DRAWINGS ARE PARTLY DIAGRAMMATIC AND DO NOT SHOW THE EXACT LOCATION OF PROJECT WORK. EXACT LOCATIONS ARE TO BE DETERMINED BY ACTUAL MEASUREMENTS AT THE PROJECT, PRIOR TO COMMENCING WORK, AND WILL BE SUBJECT TO BATTELLE'S APPROVAL.

1.12.3. PIPING DIAGRAMS ARE SCHEMATIC ONLY AND DO NOT SHOW THE PHYSICAL ARRANGEMENT OF THE EQUIPMENT. THEY SHALL NOT BE USED FOR OBTAINING MATERIAL QUANTITIES OR LINEAL RUNS OF PIPING OR OTHER WORK.

1.12.4. THE CONTRACTOR IS RESPONSIBLE FOR PROVIDING OFFSETS, TRANSITIONS, AND FITTINGS AS REQUIRED AND TO ROUTE MECHANICAL WORK AROUND OBSTRUCTIONS.

1.13. PROTECT SURROUNDING AREAS, SURFACES, AND EQUIPMENT TO PRECLUDE DAMAGE FROM WORK OF ALL DIVISIONS AND SECTIONS.

1.14. PROJECT COMPLETION REQUIREMENTS

1.14.1. OPERATION & MAINTENANCE MANUAL: PROVIDE IN PDF DOCUMENT FORMAT. INCLUDE PRODUCT INFORMATION, SUBMITTAL DATA, TEST REPORTS, INSPECTION DOCUMENTATION, START-UP DEMONSTRATION DOCUMENTATION, EQUIPMENT AND PRODUCT WARRANTIES, AND CONTACT INFORMATION FOR SUPPLIERS OF MAJOR EQUIPMENT.

1.14.2. SUBMIT "AS-BUILT" DRAWINGS INDICATING WORK AS REVISED, DETAILED AND ACTUALLY INSTALLED.

1.14.3. PROVIDE MINIMUM ONE YEAR WRITTEN WARRANTY CERTIFICATES COVERING MATERIALS AND LABOR FOR PROJECT WORK FROM APPLICABLE CONTRACTORS AND VENDORS. INCLUDE IN O&M MANUAL.

1.15. WELDING

1.15.1. CARBON STEEL SHAPES AND PLATES: PROCESSES AND WELDERS SHALL BE QUALIFIED IN ACCORDANCE WITH AWS D1.1. FABRICATE PER AWS D1.1, STATICALLY LOADED.

1.15.2. CARBON STEEL PIPE AND FITTINGS: PROCESSES AND WELDERS SHALL BE QUALIFIED IN ACCORDANCE WITH ASME SECTION IX. FABRICATE PER ASME B31.9.

1.15.3. SUBMIT WELDING PROCEDURES AND WELDER QUALIFICATIONS FOR APPROVAL.

1.16. DIMENSIONS ARE IN FEET AND INCHES UNLESS OTHERWISE SPECIFIED.

1.17. ABBREVIATIONS ARE IN ACCORDANCE WITH ASME Y14.38-1999.

2. PRODUCTS - NOT USED

3. EXECUTION

3.1. START-UP & DEMONSTRATION: PREPARE, START, AND DEMONSTRATE THAT MECHANICAL SYSTEMS OPERATE AND FUNCTION AS DESIGNED AND IN ACCORDANCE WITH THE MANUFACTURER'S RECOMMENDATIONS. PROVIDE MINIMUM ONE WEEK PRIOR NOTICE TO BATTELLE CONSTRUCTION MANAGER FOR SCHEDULING DEMONSTRATIONS. PERFORM DEMONSTRATIONS IN THE PRESENCE OF THE BATTELLE ENGINEER. PROVIDE INSTRUMENTS AND PERSONNEL AS REQUIRED TO CONDUCT DEMONSTRATION AND START-UP TO BATTELLE'S SATISFACTION. SEE 230900 FOR TEST SUBMITTAL REQUIREMENTS.

3.2. INSTALL WORK AND EQUIPMENT WITH THE PROPER ORIENTATION OF SERVICEABLE COMPONENTS TO ALLOW PROPER SERVICE.

3.3. GENERAL PIPING REQUIREMENTS

3.3.1. FABRICATE, WELD, AND INSPECT PER THE SPECIFIED CODE(S) IN THE APPLICABLE SECTION(S) OF DIVISION 23.

3.3.2. PIPE JOINT CONSTRUCTION: JOIN PIPE AND FITTINGS PER THE FOLLOWING REQUIREMENTS AND APPLICABLE CODES.

3.3.2.1. REAM ENDS OF PIPE AND TUBES AND REMOVE BURRS. BEVEL PLAIN ENDS OF STEEL PIPE.

3.3.2.2. DISINFECT/FLUSH: REMOVE SCALE, SLAG, DIRT AND DEBRIS FROM INSIDE AND OUTSIDE OF PIPE AND FITTINGS PRIOR TO ASSEMBLY. USE A NON-FOAMING LIQUID DETERGENT DISPERSANT CLEANER TO REMOVE OIL AND FOREIGN MATERIAL FROM THE PIPING AND EQUIPMENT PRIOR TO THE FINAL FILLING OF THE SYSTEMS. USE 50 PPM NALCO 7465 ANTIFOAM AND 25 PPM NALCO 7308 CLEANING AGENT, OR APPROVED EQUAL THAT IS NOT INJURIOUS TO PERSONS OR DAMAGING TO PIPING, PIPE JOINT COMPOUNDS, PACKING, COILS, VALVES, PUMPS AND THEIR MECHANICAL SEALS, TUBES, GASKETS, OR OTHER PARTS OF THE SYSTEM.

3.3.3. WELDED JOINTS: CONSTRUCT JOINTS IN ACCORDANCE WITH ASME B31.9. WELDING FILLER METALS PER REFERENCED STANDARDS.

3.3.4. FLANGED JOINTS: SELECT APPROPRIATE NON-ASBESTOS GASKET MATERIAL, SIZE, TYPE AND THICKNESS BASED ON FLUID, PRESSURE AND TEMPERATURE REQUIREMENTS. INSTALL GASKET CONCENTRICALLY POSITIONED. USE SUITABLE LUBRICANTS ON BOLT THREADS.

3.3.5. MECHANICAL FITTINGS: INSTALL PER APPLICABLE CODE OR MANUFACTURER'S INSTRUCTIONS.

3.4. CLEAN SCRATCHED OR MARRED FACTORY FINISHED AND PAINTED SURFACES OF RUST OR OTHER FOREIGN MATTER AND PAINT WITH MATCHING COLOR OF INDUSTRIAL ENAMEL OR MANUFACTURER SUPPLIED PAINT.

3.5. THOROUGHLY CLEAN MECHANICAL EQUIPMENT AND PIPING OF STAMPINGS, MARKINGS, IRON CUTTINGS, AND OTHER DETRITUS. CAREFULLY CAP PIPING DURING CONSTRUCTION WHEN CONSTRUCTION ACTIVITIES ARE NOT UNDERWAY.

200523 GENERAL DUTY MECHANICAL VALVES

1. GENERAL

1.1. SUBMITTALS: PRODUCT DATA FOR EACH TYPE OF VALVE INDICATED.

2. PRODUCTS

2.1. ISOLATION VALVES (2" AND SMALLER): SST, BRASS, OR BRONZE TWO PIECE BODY, SST OR CHROME PLATED BRASS BALL, FULL PORT, PTFE SEATS AND STUFFING BOX, INDEPENDENT PACKING NUT, LOCKABLE LEVER HANDLE EXTENDED FOR ACCOMMODATION OF INSULATION, THREADED OR PRESS-FIT ENDS, 600 WOG, 150 SWP.

2.2. ISOLATION VALVES (2 1/2" AND LARGER): BUTTERFLY TYPE PER MSS SP-67, CAST IRON BODY OR SST BODY, STAINLESS STEEL STEM AND DISC, FULL LUG STYLE, LEVER ACTUATOR (FOR SIZES 2-1/2" TO 4") OR GEAR TYPE ACTUATOR (FOR SIZES OVER 4"), BI-DIRECTIONAL DEAD END SERVICE TO 200 PSIG, BUBBLE-TIGHT SHUTOFF, FLANGED CONNECTIONS. PROVIDE WITH CHAIN WHEEL OPERATOR FOR VALVES LOCATED 8 FEET OR HIGHER ABOVE FINISHED FLOOR.

2.3. SWING CHECK VALVES, CLASS 125: MSS-SP-71, TYPE I, ASTM A126 GRAY IRON BODY WITH BOLTED BONNET, BRONZE TRIM, CLEAR OR FULL WATERWAY, FLANGED CONNECTIONS, 200 PSI COLD WORKING PRESSURE, ASBESTOS-FREE GASKET.

2.4. DRAIN VALVES: BRONZE BODY, FULL PORT BALL, STAINLESS TRIM, 3/4" HOSE CONNECTION WITH CAP AND CHAIN, HANDLE LOCKABLE IN CLOSED POSITION, 600 WOG, 150 SWP. NIBCO MODEL T-585, OR APPROVED EQUAL.

2.5. MANUFACTURERS: MILWAUKEE VALVE CO, VIEGA, HAMMOND VALVE CO, NIBCO, OR APPROVED EQUAL.

3. EXECUTION - NOT USED

200529 HANGARS AND SUPPORTS FOR MECHANICAL PIPING, DUCTS AND EQUIPMENT

1. GENERAL

1.1. SUBMITTALS: PRODUCT DATA FOR EACH TYPE OF PRODUCT USED.

2. PRODUCTS

2.1. METAL PIPE HANGERS AND SUPPORTS: CARBON STEEL OR STAINLESS STEEL PER MSS SP-58, FACTORY FABRICATED.

2.2. METAL FRAMING SYSTEMS: 1-5/8" SLOTTED 12-GAUGE STEEL CHANNEL WITH INTURNED EDGES PER MFMA-4, STEEL NUTS OR OTHER DEVICES DESIGNED TO FIT INTO CHANNEL SLOT, CONTINUOUS THREAD HANGER ROD, ELECTROPLATED ZINC COATING. MANUFACTURERS: UNISTRUT, COOPER B-LINE, ERICO OR APPROVED EQUAL.

3. EXECUTION

3.1. FABRICATE AND INSTALL PIPING IN ACCORDANCE WITH ASME B31.9 OR THE MOST CURRENT EDITION OF THE MECHANICAL CODE AS APPLICABLE. SUPPORT PIPING FROM PRIMARY STRUCTURAL MEMBERS, BEAMS, JOISTS, OR PROVIDE INTERMEDIATE SUPPORTING MEMBERS BETWEEN JOISTS OR BEAMS. PROVIDE ADDITIONAL STRUCTURAL STEEL ANGLES, CHANNELS, FRAMING CHANNELS OR OTHER INTERMEDIATE STRUCTURAL ELEMENTS REQUIRED TO SUPPORT OR HANG PIPING CAPABLE OF WITHSTANDING THE LOADS REQUIRED BY THE APPLICABLE CODE. REUSE EXISTING, WHERE POSSIBLE. FASTENING TO METAL DECK IS PROHIBITED.

3.2. PROVIDE PIPE SUPPORTS AND HANGERS AS REQUIRED. SUPPORT PIPING AT EACH CHANGE IN DIRECTION, ON EITHER SIDE OF CONTROL VALVES AND PUMPS, AT EQUIPMENT CONNECTIONS, AND AT WALL PENETRATIONS SO THAT PIPING IS INDEPENDENTLY SUPPORTED. HANGERS SHALL BE DESIGNED, MANUFACTURED AND INSTALLED IN ACCORDANCE WITH MSS SP-58. SUPPORT PIPES WITH 3/8" ROD, MINIMUM.

3.3. PROVIDE PIPE RACKS, PIPE STANDS, TRAPEZE HANGERS, ETC. AS REQUIRED. PROVIDE ADJUSTABLE HANGERS COMPLETE WITH INSERTS, ADJUSTERS, BOLTS, NUTS, SWIVELS, ALL-THREAD RODS, ETC. FOR PIPING SYSTEMS. DO NOT USE WIRE OR PERFORATED METAL TO SUPPORT PIPING.

3.4. SUPPORT PIPING AND EQUIPMENT PER SMACNA "SEISMIC RESTRAINTS MANUAL: GUIDELINES FOR MECHANICAL SYSTEMS", 3RD EDITION.

3.5. MAXIMUM SUPPORT SPACING, STEEL PIPING: 12 FEET.

200553 IDENTIFICATION FOR MECHANICAL PIPING AND EQUIPMENT

1. GENERAL

1.1. PIPING IDENTIFICATION SHALL CONFORM TO ADM-064 (ELECTRONIC COPY AVAILABLE ON REQUEST).

1.2. COORDINATE WITH BATTELLE CONSTRUCTION MANAGER FOR ASSET NUMBER ASSIGNMENTS FOR VALVES AND EQUIPMENT.

1.3. SUBMITTALS:

1.3.1. PRODUCT DATA FOR EACH TYPE OF LABEL INDICATED.

1.3.2. VALVE SCHEDULE: PROVIDE FOR EACH PIPING SYSTEM.

2. PRODUCTS

2.1. MANUFACTURED PIPE MARKERS: PRE-PRINTED, COLOR-CODED, WITH LETTERING INDICATING SERVICE AND DIRECTION OF FLOW.

2.2. PIPE WITH OD, INCLUDING INSULATION, LESS THAN 3/4-INCH: SELF-ADHESIVE VINYL TAPE.

2.3. PIPE WITH OD, INCLUDING INSULATION, GREATER THAN 3/4-INCH TO 6-INCH: PRECOILED SEMIRIGID PLASTIC FORMED TO COVER FULL CIRCUMFERENCE OF PIPE AND TO ATTACH TO PIPE WITHOUT ADHESIVE.

2.4. DIRECTIONAL ARROWS: INTEGRAL WITH PIPING SYSTEM SERVICE LETTERING OR AS SEPARATE UNIT ON EACH PIPE MARKER TO INDICATE DIRECTION OF FLOW.

2.5. COLORS: GREEN BACKGROUND WITH WHITE LETTERS.

2.6. VALVE/COMPONENT LABELS: 1" X 2", 18 GAUGE BRASS, SHAPE RECTANGLE, HOLE SIZE 1/8", GRAINGER STOCK #1F039. LETTERING SHALL BE ENGRAVED OR STAMPED, 3/8" LETTERING HEIGHT. SECURE TAG TO VALVE WITH BRASS CHAIN.

2.6.1. DATA: ALPHANUMERIC IDENTIFIER.

2.6.2. LETTERING: 1/2-INCH HELVETICA.

2.6.3. SIZE: 1-INCH X 3-INCH.

2.6.4. COLOR TO MATCH APPLICABLE CONNECTING PIPING COLOR SCHEME.

2.7. EQUIPMENT LABELS: SELF-ADHESIVE VINYL TAPE, FOR PERMANENT ATTACHMENT ON EQUIPMENT. IF THERE IS NOT ADEQUATE FLAT SPACE ON EQUIPMENT FOR ATTACHMENT OF LABEL, PROVIDE A 0.032-INCH THICK ALUMINUM BACKING PLATE FOR LABEL.

2.7.1. DATA: ALPHANUMERIC IDENTIFIER OR NOUN DESCRIPTION.

2.7.2. LETTERING: 1/2-INCH HELVETICA.

2.7.3. SIZE: 4-INCH X 4-1/2-INCH,

2.7.4. COLORS: GREEN BACKGROUND WITH WHITE LETTERS.

3. EXECUTION

3.1. PIPE LABEL INSTALLATION: LOCATE PIPE LABELS, WITH FLOW INDICATION ARROWS SHOWING DIRECTION OF FLOW, ON EACH PIPING SYSTEM AS FOLLOWS:

3.1.1. NEAR MAJOR EQUIPMENT ITEMS AND OTHER POINTS OF ORIGIN AND TERMINATION.

3.1.2. SPACED AT MAXIMUM INTERVALS OF 15 FEET ALONG EACH RUN.

3.2. VALVE TAG INSTALLATION: INSTALL TAGS ON VALVES AS INDICATED ON THE DRAWINGS OR PER BATTELLE CONSTRUCTION MANAGER.

3.3. EQUIPMENT LABELS: INSTALL LABELS ON OR NEAR EACH PIECE OF MAJOR MECHANICAL EQUIPMENT AT ACCESSIBLE AND VISIBLE LOCATION.

200700 MECHANICAL INSULATION

1. GENERAL

1.1. SUBMITTALS: PRODUCT DATA FOR EACH TYPE OF MATERIAL INDICATED.

2. PRODUCTS

2.1. PIPE INSULATION: 850ºF SNAP-ON FIBERGLASS, WITH A FACTORY APPLIED VAPOR RETARDER ALL SERVICE JACKET AND SELF-SEALING LAP. UL LISTED WITH A FLAME SPREAD/SMOKE DEVELOPMENT OF 25/50 OR LESS IN ACCORDANCE WITH ASTM E84. MANUFACTURERS: JOHNS-MANVILLE MICRO-LOK, CERTAINTEED, KNAUF, OR APPROVED EQUAL.

2.2. INSULATED PIPE SADDLES: "COOLDRY" INSULATED SADDLE, RIGID PHENOLIC FOAM INSULATION ASTM E-84 25-50 FLAME/SMOKE RATED, -290°F TO +250°F APPLICATION RANGE, ZERO PERM RATED ASTM E-96 VAPOR BARRIER, SEAL AIR TIGHT ON CHILLED WATER SYSTEMS.

2.3. VAPOR BARRIER COMPOUND: WATER BASED. FIRE RESISTANT AS RECOMMENDED BY INSULATION MANUFACTURER. MAINTAIN A CONTINUOUS VAPOR BARRIER OVER ENTIRE LENGTH OF PIPING.

2.4. REMOVABLE INSULATION PADS: WOVEN FIBERGLASS JACKETING AROUND 2" THICK FIBERGLASS BATT TYPE INSULATION. USE STAINLESS STEEL LACING HOOKS AND WIRE.

2.5. PVC JACKET: HIGH-IMPACT, UV RESISTANT PVC PER ASTM D1784, 20 MILS THICK; ROLL STOCK READY FOR SHOP OR FIELD CUTTING AND FORMING. ADHESIVE AS RECOMMENDED BY INSULATION MANUFACTURER.

2.6. PVC FITTING COVERS: FACTORY FABRICATED, 20-MIL THICK, HIGH IMPACT, ULTRAVIOLET RESISTANT PVC. ADHESIVE AS RECOMMENDED BY INSULATION MANUFACTURER.

2.7. ALUMINUM JACKET: ASTM B209, 3003 ALLOY, H-14 ROLL STOCK READY FOR SHOP OR FIELD CUTTING. EMBOSSED FINISH, 0.010" THICK. FACTORY APPLIED MOISTURE BARRIER 1-MIL THICK, HEAT BONDED POLYETHYLENE AND KRAFT PAPER. PRE-FORMED ELBOWS OF SAME MATERIAL, THICKNESS AND FINISH.

3. EXECUTION

3.1. APPLY INSULATION CONTINUOUSLY THROUGH HANGERS. INSTALL INSULATED PIPE SADDLES AT HANGERS AND SUPPORTS.

3.2. INSULATE FITTINGS, VALVES AND STRAINERS USING PRE-FORMED FITTING INSULATION.

3.3. INSTALL REMOVABLE INSULATION PADS AT VALVES, STRAINERS AND OTHER EQUIPMENT WHERE STANDARD INSULATION IS IMPRACTICAL.

3.4. INSULATE MECHANICAL JOINTS USING A SECTION OF OVERSIZED, PRE-FORMED PIPE INSULATION. OVERLAP ADJOINING INSULATION BY NOT LESS THAN 2X THE THICKNESS OF THE INSULATION.

3.5. INSTALLATION OF INSERTS AND SHIELDS:

3.5.1. APPLICATION: PIPING 1-1/2" DIAMETER AND LARGER.

3.5.2. INSERT LOCATION: BETWEEN SUPPORT SHIELD AND PIPING AND UNDER THE FINISH JACKET.

3.5.3. INSERT CONFIGURATION: MINIMUM 8" LONG, 1/2 THE OUTSIDE CIRCUMFERENCE OF THE PIPE INSULATION, OF SAME THICKNESS AND CONTOUR AS ADJOINING INSULATION; MAY BE FACTORY FABRICATED.

3.6. ALUMINUM JACKET INSTALLATION: INSTALL JACKET WITH 2-INCH OVERLAP AT LONGITUDINAL SEAMS AND END JOINTS. OVERLAP LONGITUDINAL SEAMS AND ARRANGE TO SHED WATER. SEAL END JOINTS WITH WEATHERPROOF SEALANT RECOMMENDED BY INSULATION MANUFACTURER. SECURE JACKET WITH STAINLESS STEEL BANDS 12 INCHES ON CENTER AND AT END JOINTS.

3.7. PIPING INSULATION SCHEDULE

3.7.1. CHILLED WATER: 1 INCH THICK.

3.8. FIELD-APPLIED JACKET SCHEDULE

3.8.1. INSTALL PVC JACKET ON EXPOSED PIPING LOCATED INDOORS.

3.8.2. INSTALL ALUMINUM JACKET ON PIPING LOCATED OUTDOORS.

** CONTINUED ON G0-003 **

APPROVAL DATE 02/09/2021

REVISIONS DESCRIPTION

DOCUMENT NO S789008-G0-002		SERVICE REQUEST NO S789008
CURRENT REVISION	ORIGINAL	U. S. DEPARTMENT OF ENERGY PACIFIC NORTHWEST SITE OFFICE
DRAWN JM SCOTT	DRAWN JM SCOTT	Pacific Northwest Division — Battelle — Richland, Washington 99352
CHECKED DK CREVIER	CHECKED DK CREVIER	GENERAL SPECIFICATIONS
DRAFTING CHECKER SD BURNETT	DRAFTING CHECKER SD BURNETT	
ENGINEER JM SCOTT	ENGINEER JM SCOTT	
APVD DJ DE SMET	APVD DJ DE SMET	
OTHER	OTHER	PROJECT TITLE CHILLER (AIR-COOLED) REDUNDANT CHW PUMP INSTALLATION
OTHER	OTHER	SIZE D · BLDG 3410 · DWG NO G0-002 · REV NO 0
		SCALE NONE · SHEET 1 OF 1

PLOT NAME: S789008-G0-002.dwg
PLOT DATE: 2/18/21 10:20am
PLOT BY: SCOTT, JEFFERY M

PNNL-BATT_D [REV1 8-31-18]

SPECIFICATIONS
(UNLESS OTHERWISE NOTED)

** CONTINUED FROM G0-002 **

DIVISION 23 - HEATING VENTILATION, AND AIR CONDITIONING

230500 COMMON WORK RESULTS FOR HVAC

1. GENERAL

1.1. HANGERS: CONFORM TO 200529.

1.2. LEAK TESTING: SEE 200500.

2. PRODUCTS - NOT USED

3. EXECUTION

3.1. TEST PERFORMANCE: AS IDENTIFIED IN THE INDIVIDUAL DIVISION 23 SECTIONS.

3.2. FIELD INSPECTIONS: VERIFY CORRECT LABELING FOR EACH FLUID TRANSFER LINE.

230800 TESTING AND BALANCING

1. GENERAL

1.1. ENGAGE THE SERVICES OF AN INDEPENDENT TESTING AND BALANCING AGENCY, CERTIFIED BY THE ASSOCIATED AIR BALANCE COUNCIL (AABC) OR THE NATIONAL ENVIRONMENTAL BALANCING BUREAU (NEBB) TO TEST AND BALANCE THE MECHANICAL SYSTEMS.

1.2. SUBMITTALS

1.2.1. TAB AGENCY QUALIFICATIONS.

1.2.2. TAB AGENCY TEST FORMS AND TEST PLAN

1.2.3. CERTIFIED TEST AND BALANCE REPORT.

2. PRODUCTS - NOT USED

3. EXECUTION

3.1. COMPLETE WATER BALANCING AFTER HYDRONIC INSTALLATION AND CONSTRUCTION IS COMPLETE. SET AND ADJUST PUMP SPEEDS TO ACHIEVE SPECIFIED MINIMUM AND MAXIMUM FLOW RATES THROUGH CHILLER CH-004 AND HEAT EXCHANGER LHX-001, AS SHOWN IN THE SEQUENCE OF OPERATION ON M7-101.

230900 INSTRUMENTATION AND CONTROL FOR HVAC

1. GENERAL

1.1. SUMMARY: FURNISH LABOR, MATERIALS, EQUIPMENT, SOFTWARE, PROGRAMMING, SERVICE AND TRAINING NECESSARY FOR COMPLETE AND FULLY OPERATIONAL CONTROLS FOR INSTALLED EQUIPMENT. INTEGRATE CONTROLS WITH THE EXISTING JOHNSON CONTROLS INC. METASYS FMCS CONTROL SYSTEM.

1.2. SUBMITTALS

1.2.1. PRODUCT DATA: INCLUDE MANUFACTURER'S TECHNICAL LITERATURE FOR EACH CONTROL DEVICE. INDICATE DIMENSIONS, CAPACITIES, PERFORMANCE CHARACTERISTICS, ELECTRICAL CHARACTERISTICS, AND INSTALLATION AND STARTUP INSTRUCTIONS FOR EACH TYPE OF PRODUCT INDICATED.

1.2.2. SHOP DRAWINGS: INCLUDE SYSTEM ARCHITECTURE DIAGRAM, EQUIPMENT SCHEDULES, AND SYSTEM CONTROL DRAWINGS. INCLUDE LIST OF CONTROL POINTS TO BE MAPPED FROM COMMUNCATION INTERFACES.

1.2.3. FUNCTIONAL PERFORMANCE TESTING PLAN

1.2.3.1. SUBMIT A TESTING PLAN FOR FOR START-UP AND FUNCTIONAL TESTING TO DEMONSTRATE INSTALLATION IS COMPLETE AND COMPONENTS PERFORM AS SPECIFIED. PLAN SHALL BE APPROVED BY BATELLE PRIOR TO IMPLEMENTATION. THE TEST PLAN FOR THIS WORK MAY BE COMBINED WITH WORK UNDER S804449 (CHILLER #5) INTO A SINGLE COMPREHENSIVE PLAN.

1.2.3.2. AFTER SUCCESSFUL TESTING, SUBMIT COMPLETED TEST REPORT.

1.2.4. AS-BUILT DRAWINGS: UPDATE SHOP DRAWINGS TO REFLECT ANY CHANGES DURING CONSTRUCTION.

1.2.5. OPERATION AND MAINTENANCE DATA: FOR HVAC INSTRUMENTATION AND CONTROL SYSTEM TO INCLUDE IN OPERATION AND MAINTENANCE MANUAL.

2. PRODUCTS

2.1. APPROVED MANUFACTURERS

2.1.1. NETWORK CONTROLLERS, PROGRAMMABLE APPLICATION CONTROLLERS: JOHNSON CONTROLS, INC.

2.1.2. SENSORS AND CURRENT SWITCHES: JOHNSON CONTROLS, INC., ALERTON, AUTOMATED LOGIC, INC., BAPI, AUTOMATION COMPONENTS, INC.

2.2. BUILDING NETWORK CONTROLLER (BNC)

2.2.1. MANUFACTURER: JOHNSON CONTROL SUPERVISORY NETWORK ENGINE MODEL SNE 22001-0.

2.2.1. GENERAL: INCLUDE ONE OR MORE INDEPENDENT, STANDALONE, MICROPROCESSOR-BASED NETWORK CONTROLLERS. CONTROLLER SHALL HAVE ENOUGH MEMORY TO SUPPORT ITS OPERATING SYSTEM, DATABASE, AND PROGRAMMING REQUIREMENTS.

2.2.2. DATA SHALL BE SHARED BETWEEN NETWORKED CONTROLLERS AND OTHER NETWORK DEVICES.

2.2.3. OPERATING SYSTEM OF CONTROLLER SHALL MANAGE INPUT AND OUTPUT COMMUNICATION SIGNALS TO ALLOW DISTRIBUTED CONTROLLERS TO SHARE REAL AND VIRTUAL OBJECT INFORMATION AND ALLOW FOR CENTRAL MONITORING AND ALARMS.

2.2.4. CONTROLLERS SHALL HAVE A REAL-TIME CLOCK, FULLY PROGRAMMABLE, ABLE TO SUPPORT A MINIMUM OF 5,000 PROGRAMMING OBJECTS.

2.2.5. COMMUNICATION
2.2.5.1. NETWORK CONTROLLERS SHALL COMMUNICATE WITH OTHER DEVICES ON FMCS FIELD BUS.
2.2.5.2. NETWORK CONTROLLER ALSO SHALL PERFORM ROUTING IF CONNECTED TO A NETWORK OF PROGRAMMABLE APPLICATION AND APPLICATION-SPECIFIC CONTROLLERS.

2.2.6. SERVICEABILITY
2.2.6.1. CONTROLLER SHALL BE EQUIPPED WITH DIAGNOSTIC LEDS OR OTHER FORM OF LOCAL VISUAL INDICATION OF POWER, COMMUNICATION, AND PROCESSOR.
2.2.6.2. WIRING AND CABLE CONNECTIONS SHALL BE MADE TO FIELD-REMOVABLE, MODULAR TERMINAL STRIPS OR TO A TERMINATION CARD CONNECTED BY A RIBBON CABLE.
2.2.6.3. CONTROLLER SHALL MAINTAIN BIOS AND PROGRAMMING INFORMATION IN EVENT OF A POWER LOSS FOR AT LEAST 96 HOURS.

2.3. PROGRAMMABLE APPLICATION CONTROLLERS

2.3.1. APPROVED MANUFACTURER: JOHNSON CONTROLS FIELD APPLICATION CONTROLLERS (FAC), INPUT/OUTPUT MODULES (IOM)

2.3.1. GENERAL PROGRAMMABLE APPLICATION CONTROLLER REQUIREMENTS:
2.3.1.1. INCLUDE ADEQUATE NUMBER OF CONTROLLERS TO ACHIEVE PERFORMANCE INDICATED.
2.3.1.2. CONTROLLER SHALL HAVE ENOUGH MEMORY TO SUPPORT ITS OPERATING SYSTEM, DATABASE, AND PROGRAMMING REQUIREMENTS.
2.3.1.3. DATA SHALL BE SHARED BETWEEN NETWORKED CONTROLLERS AND OTHER NETWORK DEVICES.
2.3.1.4. OPERATING SYSTEM OF CONTROLLER SHALL MANAGE INPUT AND OUTPUT COMMUNICATION SIGNALS TO ALLOW DISTRIBUTED CONTROLLERS TO SHARE REAL AND VIRTUAL OBJECT INFORMATION AND ALLOW FOR CENTRAL MONITORING AND ALARMS.
2.3.1.5. CONTROLLERS SHALL BE FULLY PROGRAMMABLE.
2.3.1.6. EACH SYSTEM (SUPPLY, EXHAUST, CHW, HHW, ETC) WILL BE DESIGNED AS A STAND-ALONE, DISTRIBUTED CONTROL SYSTEM.

2.3.2. COMMUNICATION
2.3.2.1. PROGRAMMABLE APPLICATION CONTROLLERS SHALL COMMUNICATE WITH OTHER DEVICES ON NETWORK.
2.3.2.2. COMMUNICATION BETWEEN CONTROLS WILL USE ASHRAE 135-2008 STANDARD.

2.3.3. SERVICEABILITY
2.3.3.1. CONTROLLER SHALL BE EQUIPPED WITH DIAGNOSTIC LEDS OR OTHER FORM OF LOCAL VISUAL INDICATION OF POWER, COMMUNICATION, AND PROCESSOR.
2.3.3.2. WIRING AND CABLE CONNECTIONS SHALL BE MADE TO FIELD-REMOVABLE, MODULAR TERMINAL STRIPS OR TO A TERMINATION CARD CONNECTED BY A RIBBON CABLE.
2.3.3.3. CONTROLLER SHALL MAINTAIN BIOS AND PROGRAMMING INFORMATION IN EVENT OF A POWER LOSS FOR AT LEAST 72 HOURS.

2.3.4. CONTROLLER SOFTWARE REQUIREMENTS
2.3.4.1. SOFTWARE APPLICATIONS SHALL RESIDE AND OPERATE IN CONTROLLERS. EDITING OF APPLICATIONS SHALL OCCUR AT OPERATOR WORKSTATIONS.
2.3.4.2. I/O POINTS SHALL BE IDENTIFIED BY UP TO 30 CHARACTER OBJECT NAME AND UP TO 16 CHARACTER POINT DESCRIPTOR. SAME NAMES SHALL BE USED AT OPERATOR WORKSTATIONS.
2.3.4.3. CONTROL FUNCTIONS SHALL BE EXECUTED WITHIN CONTROLLERS USING DDC ALGORITHMS.
2.3.4.4. CONTROLLERS SHALL BE CONFIGURED TO USE STORED DEFAULT VALUES TO ENSURE FAIL-SAFE OPERATION. DEFAULT VALUES SHALL BE USED WHEN THERE IS A FAILURE OF A CONNECTED INPUT INSTRUMENT OR LOSS OF COMMUNICATION OF A GLOBAL POINT VALUE.

2.3.5. SPARE CAPACITY: PROGRAMMABLE CONTROLLERS SHALL HAVE MINIMUM OF 10% ADDITIONAL POINT CAPACITY FOR EACH TYPE OF POINT (AI, BI, AO, BO) AND A MINIMUM OF 25% AVAILABLE PROGRAMMING MEMORY.

2.4. TEMPERATURE SENSORS, SINGLE-POINT IMMERSION TYPE (LIQUIDS)

2.4.1. TEMPERATURE RANGE: -5 TO 275 DEG F, WITH ACCURACY OF ± 0.5 DEG F.

2.4.2. PROBE: SINGLE-POINT SENSOR WITH A STAINLESS-STEEL SHEATH.

2.4.3. LENGTH: AS REQUIRED BY APPLICATION TO ACHIEVE TIP AT MIDPOINT.

2.4.4. ENCLOSURE: JUNCTION BOX WITH REMOVABLE COVER; NEMA 250, TYPE 1 FOR INDOOR APPLICATIONS AND TYPE 4 FOR OUTDOOR APPLICATIONS.

2.4.5. GASKET FOR ATTACHMENT TO EQUIPMENT TO SEAL CONNECTION AIRTIGHT.

2.5. THERMOWELLS: SERIES 300 THREADED STAINLESS STEEL, INSIDE DIAMETER AND INSERTION LENGTH SHALL BE AS REQUIRED FOR THE APPLICATION.

2.6. LIQUID-PRESSURE DIFFERENTIAL TRANSMITTER WITH FIELD-SELECTABLE RANGE

2.6.1. PERFORMANCE
2.6.1.1. FIELD-SELECTABLE RANGE: 5, 10, 25, 50 PSIG.
2.6.1.2. FIELD-SELECTABLE UNIDIRECTIONAL OR BIDIRECTIONAL RANGE.
2.6.1.3. ACCURACY: WITHIN 1 PERCENT OF THE FULL-SCALE RANGE, EXCEPT LOWEST SELECTABLE RANGE WITHIN 2 PERCENT.
2.6.1.4. STABILITY: WITHIN 0.5 PERCENT OF SPAN PER YEAR.
2.6.1.5. PRESSURE: MAXIMUM OPERATING PRESSURE EQUAL TO HIGHEST PRESSURE IN RANGE.
2.6.1.6. OVERPRESSURE: PROOF PRESSURE 2.2 TIMES FULL SCALE; BURST PRESSURE 40 TIMES FULL SCALE.
2.6.1.7. TEMPERATURE LIMITS: -44 TO 185 DEG F.
2.6.1.8. COMPENSATE TEMPERATURE LIMITS: 32 TO 130 DEG F.
2.6.1.9. THERMAL EFFECTS: 2 PERCENT OF FULL SCALE PER 100 DEG F.
2.6.1.10. RESPONSE TIME: FIELD SELECTABLE FROM 1 TO 5 SECONDS.
2.6.1.11. SHOCK AND VIBRATION SHALL NOT HARM THE TRANSMITTER.

2.6.2. OUTPUT SIGNALS
2.6.2.1. CONFIGURABLE ANALOG OUTPUT CURRENT SIGNAL: TWO-WIRE, 4- TO 20-MA DC CURRENT SOURCE.
2.6.2.2. CONFIGURABLE ANALOG OUTPUT VOLTAGE SIGNALS: THREE WIRE, 0-10 V.

2.6.3. DISPLAY: FOUR-DIGIT LCD WITH MINIMUM 0.4-INCH-HIGH NUMERIC CHARACTERS.

2.6.4. OPERATOR INTERFACE: DIGITAL ZERO BUTTON LOCATED BEHIND COVER. RANGE SELECTOR LOCATED BEHIND COVER.

2.6.5. CONSTRUCTION
2.6.5.1. CAST-ALUMINUM ENCLOSURE WITH REMOVABLE COVER.
2.6.5.2. WETTED PARTS OF TRANSMITTER CONSTRUCTED OF 17-4 PH STAINLESS STEEL.
2.6.5.3. THREADED, NPS 1/8 PROCESS CONNECTIONS ON BOTTOM OF INSTRUMENT ENCLOSURE.
2.6.5.4. 1/2-INCH TRADE SIZE CONNECTION FOR CONDUIT ON BOTTOM OF INSTRUMENT ENCLOSURE.
2.6.5.5. SCREW TERMINAL BLOCK FOR WIRE CONNECTIONS.
2.6.5.6. VERTICAL PLANE MOUNTING.
2.6.5.7. NEMA 250, TYPE 4.

2.7. CURRENT SWITCHES: SELF-POWERED, SOLID-STATE WITH ADJUSTABLE CONTROLS FOR PICKUP AND DROPOUT CURRENT, SELECTED TO MATCH CURRENT AND SYSTEM OUTPUT REQUIREMENTS, SPLIT-CORE DESIGN.

2.8. AUTOMATIC CONTROL VALVES

2.8.1. STEEL BODY WITH STAINLESS STEEL STEM EXTENDED TO CLEAR THE PIPING INSULATION. VALVE BODIES SHALL MEET ANSI CLASS 150, STAINLESS STEEL DISC, FLANGED-END CONNECTIONS. MODIFIED EQUAL PERCENTAGE, ANSI 285 PSI BUBBLE TIGHT SHUT-OFF.

2.8.2. MANUFACTURERS: BRAY, BELIMO, FLOWCON OR APPROVED EQUAL.

3. EXECUTION

3.1. EXAMINATION

3.1.2. THOROUGHLY EXAMINE THE DRAWINGS FOR CONTROL DEVICE AND EQUIPMENT LOCATIONS. REPORT ANY DISCREPANCIES, CONFLICTS, OR OMISSIONS TO BATTELLE FOR RESOLUTION BEFORE STARTING ROUGH-IN WORK.

3.1.3. INSPECT THE SITE TO VERIFY THAT EQUIPMENT MAY BE INSTALLED AS SHOWN. REPORT ANY DISCREPANCIES, CONFLICTS, OR OMISSIONS TO BATTELLE FOR RESOLUTION BEFORE STARTING ROUGH-IN WORK.

3.2. CONNECT AND CONFIGURE EQUIPMENT AND SOFTWARE TO ACHIEVE SEQUENCE OF OPERATION SPECIFIED.

3.3. INSTALL LABELS AND NAMEPLATES TO IDENTIFY CONTROL COMPONENTS IN ACCORDANCE WITH SECTION 200553 "IDENTIFICATION FOR HVAC PIPING AND EQUIPMENT."

3.4. INSTALL INSTRUMENT WELLS AND ACCESSORIES FOR CONTROL SENSORS UNDER SECTION 232113 “HYDRONIC PIPING."

3.5. SENSORS:

3.5.1. INSTALL INPUT AND OUTPUT DEVICES IN ACCORDANCE WITH THE MANUFACTURER'S RECOMMENDATIONS.

3.5.2. MOUNT SENSORS RIGIDLY AND ADEQUATELY FOR THE ENVIRONMENT WITHIN WHICH THE SENSOR OPERATES.

3.5.3. WIRES ATTACHED TO SENSORS SHALL BE AIR SEALED IN THEIR RACEWAYS OR IN THE WALL TO STOP AIR TRANSMITTED FROM OTHER AREAS AFFECTING SENSOR READINGS.

3.5.4. PIPE-MOUNTED TEMPERATURE SENSORS SHALL BE INSTALLED IN WELLS. INSTALL LIQUID TEMPERATURE SENSORS WITH HEAT-CONDUCTING FLUID IN THE THERMAL WELLS.

3.6. PROGRAMMABLE CONTROLLERS: INSTALL PROGRAMMABLE CONTROLLERS AND APPLICATION SPECIFIC DEVICES ON EACH FIELD BUS TO MEET THE REQUIREMENTS OF THE SEQUENCE OF CONTROL.

3.7. ELECTRICAL WIRING AND CONNECTION INSTALLATION: CONTROL CABINETS (ENCLOSURES), RACEWAYS AND BOXES, BUILDING WIRE AND CABLE, AND SIGNAL AND COMMUNICATION CABLE SHALL BE PROVIDED BY THE DIVISION 26 CONTRACTOR.

3.7.1. CONNECT HAND-OFF-AUTO SELECTOR SWITCHES TO OVERRIDE AUTOMATIC INTERLOCK CONTROLS WHEN SWITCH IS IN HAND POSITION.

3.8. BACNET NETWORK MANAGEMENT: COORDINATE WITH BATTELLE FOR UNIQUE NAMING AND ADDRESSING FOR NETWORKS AND DEVICES, FOR POINT NAME AND ALARM TEXT REQUIREMENTS, FOR ADX AND FACILITY CODES, AND FOR LIST OF ALLOWED AND REQUIRED ABBREVIATIONS.

3.9. COMMUNICATION INTERFACE

3.9.1. FMCS SHALL HAVE A COMMUNICATION INTERFACE WITH EQUIPMENT SUCH AS VARIABLE FREQUENCY DRIVES HAVING INTEGRAL CONTROLS AND HAVING A COMMUNICATION INTERFACE FOR REMOTE MONITORING OR CONTROL.

3.9.2. COORDINATE WITH BATTELLE DURING SUBMITTAL PROCESS THE POINTS REQUIRED TO BE MAPPED FROM COMMUNICATION INTERFACE.

3.10. FIELD QUALITY CONTROL

3.10.1. ENGAGE A FACTORY-AUTHORIZED SERVICE REPRESENTATIVE TO INSPECT, TEST, AND ADJUST FIELD-ASSEMBLED COMPONENTS AND EQUIPMENT INSTALLATION, INCLUDING CONNECTIONS AND TO ASSIST IN FIELD TESTING. REPORT RESULTS IN WRITING.

3.10.2. PERFORM THE FOLLOWING FIELD TESTS AND INSPECTIONS, AND PREPARE TEST REPORTS:

3.10.2.1. OPERATIONAL TEST: AFTER ELECTRICAL CIRCUITRY HAS BEEN ENERGIZED, START UNITS TO CONFIRM PROPER UNIT OPERATION. REMOVE AND REPLACE MALFUNCTIONING UNITS AND RETEST.
3.10.2.2. TEST AND ADJUST CONTROLS AND SAFETIES.
3.10.2.3. TEST CALIBRATION OF ELECTRONIC CONTROLLERS BY DISCONNECTING INPUT SENSORS AND STIMULATING OPERATION WITH COMPATIBLE SIGNAL GENERATOR.
3.10.2.4. TEST EACH POINT THROUGH ITS FULL OPERATING RANGE TO VERIFY THAT SAFETY AND OPERATING CONTROL SET POINTS ARE AS REQUIRED.
3.10.2.5. TEST EACH CONTROL LOOP TO VERIFY STABLE MODE OF OPERATION AND COMPLIANCE WITH SEQUENCE OF OPERATION. ADJUST PID ACTIONS.
3.10.2.6. TEST EACH SYSTEM IN ACCORDANCE WITH THE APPROVED FUNCTIONAL TEST PLAN FOR COMPLIANCE WITH SEQUENCE OF OPERATION.
3.10.2.7. TEST SOFTWARE AND HARDWARE INTERLOCKS.
3.10.2.8. REPLACE DAMAGED OR MALFUNCTIONING CONTROLS AND EQUIPMENT AND REPEAT TESTING PROCEDURES.

3.10.3. DEMONSTRATION: ENGAGE A FACTORY-AUTHORIZED SERVICE REPRESENTATIVE TO TRAIN BATTELLE'S MAINTENANCE PERSONNEL TO ADJUST, OPERATE, AND MAINTAIN HVAC INSTRUMENTATION AND CONTROLS.

3.11. FMCS STANDARDIZATION REQUIREMENTS

3.11.1. GRAPHICS: PROVIDE GRAPHICS ON EXISTING FMCS SYSTEM, FORMATTING SHALL MATCH EXISTING. GRAPHICS TO BE SUBMITTED TO THE BATTELLE LEAD DESIGN ENGINEER FOR APPROVAL.

3.11.2. ALARMS: ALARMS REQUIRED BY THE SEQUENCE OF CONTROL SHALL BE FULLY CONFIGURED FOR DELIVERY TO THE OPERATOR WORKSTATIONS AND THE ALARM FILES. THE ALARM MESSAGES SHALL BE DESCRIPTIVE AND INCLUDE AS A MINIMUM: BUILDING IDENTIFICATION, SYSTEM IDENTIFICATION, DATE, TIME TO THE SECOND, NATURE OF THE ALARM. THE SYSTEM SHALL BE CONFIGURED TO SEND AN ALARM MESSAGE ON RETURN TO NORMAL.

3.11.3. TRENDS: TREND I/O POINT PRESENT VALUES, SET POINTS, AND OTHER PARAMETERS USED IN THE SEQUENCE OF OPERATION. TRENDS SHALL BE STORED WITHIN THE CONTROLLER AND UPLOADED TO SERVER AUTOMATICALLY ON REACHING 80% OF CONTROLLER BUFFER LIMIT, OR BY OPERATOR REQUEST, OR BY ARCHIVING TIME SCHEDULE.

230913 VARIABLE FREQUENCY/ADJUSTABLE SPEED DRIVES

1. GENERAL

1.1. SUBMITTALS: START-UP REPORTS.

2. PRODUCTS

2.1. DRIVES SUPPLIED BY BATTELLE FOR INSTALLATION BY THE CONTRACTOR.

2.2. MANUFACTURER: ABB MODEL ACH580-3PCR-027A (034A)-4.

3. EXECUTION

3.1. INSPECTION AND INSTALLATION: VERIFY INSTALLATION CONDITIONS AS SATISFACTORY TO RECEIVE WORK OF THIS SECTION. DO NOT INSTALL UNTIL ANY UNSATISFACTORY CONDITIONS ARE CORRECTED. BEFORE AND DURING INSTALLATION, PROTECT VFD FROM SITE CONTAMINANTS.

3.2. COORDINATE REQUIRED ELECTRICAL AND CONTROL INSTALLATION WORK WITH OTHER DIVISIONS AS REQUIRED

3.3. CERTIFIED FACTORY START-UP SHALL BE PROVIDED FOR EACH DRIVE BY A FACTORY AUTHORIZED SERVICE CENTER. SUBMIT A CERTIFIED START-UP FORM FOR EACH DRIVE.

** CONTINUED ON G0-004 **

APPROVAL DATE 02/09/2021

REVISIONS DESCRIPTION

DOCUMENT NO S789008-G0-003		SERVICE REQUEST NO S789008
CURRENT REVISION	ORIGINAL	U. S. DEPARTMENT OF ENERGY PACIFIC NORTHWEST SITE OFFICE
DRAWN JM SCOTT	DRAWN JM SCOTT	Pacific Northwest Division — Battelle — Richland, Washington 99352
CHECKED DK CREVIER	CHECKED DK CREVIER	GENERAL SPECIFICATIONS
DRAFTING CHECKER SD BURNETT	DRAFTING CHECKER SD BURNETT	
ENGINEER JM SCOTT	ENGINEER JM SCOTT	
APVD DJ DE SMET	APVD DJ DE SMET	
OTHER	OTHER	PROJECT TITLE CHILLER (AIR-COOLED) REDUNDANT CHW PUMP INSTALLATION
OTHER	OTHER	SIZE D · BLDG 3410 · DWG NO G0-003 · REV NO 0
		SCALE NONE · SHEET 1 OF 1

PLOT NAME: S789008-G0-003.dwg
PLOT DATE: 2/9/2021 10:42am
PLOT BY: SCOTT, JEFFERY M

PNNL-BATT_D [REV1 8-31-18]

SPECIFICATIONS
(UNLESS OTHERWISE NOTED)

** CONTINUED FROM G0-003 **

232113 HYDRONIC PIPING

1. GENERAL

1.1. CODE APPLICABILITY: ASME B31.9, INTERNATIONAL MECHANICAL CODE.

1.2. WORKING PRESSURE: 150 PSIG.

1.3. SUBMITTALS

1.3.1. PRODUCT DATA FOR EACH TYPE OF PIPING, FITTINGS, VALVES AND SPECIALTIES INDICATED.

1.3.2. LEAK TEST REPORT.

2. PRODUCTS

2.1. PIPE: BLACK STEEL, SCHEDULE 40 WELDED OR SEAMLESS, PER ASTM A53.

2.2. FITTINGS: BUTTWELDED PER ASTM A234, GRADE WPB AND ASME B16.9, WALL THICKNESS TO MATCH PIPE.

2.3. WROUGHT CAST- AND FORGED-STEEL FLANGES AND FLANGED FITTINGS: ASME B16.5, INCLUDING BOLTS, NUTS, AND GASKETS.

2.4. PIPE INSULATION: SEE 200700.

2.5. PIPE HANGERS: SEE 200529.

2.6. TEST PLUGS: BRASS OR STAINLESS STEEL WITH CORE INSERTS FOR TEMPERATURE AND PRESSURE, GASKETED AND THREADED CAP, CAP TO BE STRAPPED TO BODY. USE EXTENDED BODY TYPE IF PIPING IS INSULATED. 500 PSI RATED. MANUFACTURERS: PETERSON EQUIPMENT CO., TRERICE, WATTS OR APPROVED EQUAL.

2.7. TEMPERATURE GAUGES: 1/4" OR 1/2" NPT STEM CONNECTION, 2" DIAL SIZE, STAINLESS STEEL, -20/120°F RANGE. ASHCROFT SERIES EI OR APPROVED EQUAL. PROVIDE COMPLETE WITH THERMOWELL.

2.8. PRESSURE GAUGES: 0-60 PSI, 2-1/2" DIAL, LIQUID FILLED 1/4" NPT BOTTOM CONNECTION, WEKSLER # BY42Y OR APPROVED EQUAL. PROVIDE COMPLETE WITH 1/4" BRASS OR STAINLESS STEEL BALL VALVE.

2.9. FLEXIBLE CONNECTORS AT PUMP

2.9.1. SUCTION SIDE: 304 STAINLESS STEEL, CLOSE PITCH, ANNULAR CORRUGATED HOSE WITH A TYPE 304 BRAIDED OUTER COVERING, ANSI CLASS 150 CARBON STEEL PLATE FLANGES. METRAFLEX MODEL SLPC OR APPROVED EQUAL.

2.9.2. DISCHARGE SIDE: 304 STAINLESS STEEL, CLOSE PITCH, ANNULAR CORRUGATED HOSE WITH A TYPE 304 BRAIDED OUTER COVERING, ANSI CLASS 150 CARBON STEEL PLATE FLANGES, WITH INTERNAL FLOW STRAIGHTENING VANES. METRAFLEX MODEL VANE FLEX VF OR APPROVED EQUAL.

3. EXECUTION

3.1. TESTING: PERFORM HYDROSTATIC TESTING PER ASME B31.9 ON INSTALLED PIPING. TEST PRESSURE SHALL BE 150 PSIG WITH A TEST DURATION OF 4 HOURS MINIMUM. AN IN-SERVICE TEST IS ACCEPTABLE AT TIE-IN POINTS AND ANY OTHER LOCATION WHERE A HYDROSTATIC TEST IS NOT FEASIBLE. USE OF THE SYSTEM MEDIA IS ACCEPTABLE FOR TESTING IF IT IS NON-HAZARDOUS.

3.2. INSTALL PIPING WITH WELDED JOINTS. USE FLANGES AT EQUIPMENT AND VALVE CONNECTIONS ONLY AS INDICATED ON THE DRAWINGS.

232123 HYDRONIC PUMPS

1. GENERAL - NOT USED

2. PRODUCTS - PUMPS SUPPLIED BY BATTELLE FOR INSTALLATION BY THE CONTRACTOR.

3. EXECUTION

3.1. PUMP INSTALLATION

3.1.1. INSTALL PUMPS TO PROVIDE ACCESS FOR PERIODIC MAINTENANCE INCLUDING REMOVING MOTORS, IMPELLERS, COUPLINGS, AND ACCESSORIES.

3.1.2. INSTALL PRESSURE GAUGES ON PUMP SUCTION AND DISCHARGE OR AT INTEGRAL PRESSURE-GAGE TAPPING, OR INSTALL SINGLE GAUGE WITH MULTIPLE-INPUT SELECTOR VALVE.

3.2. COMPLETE INSTALLATION AND STARTUP CHECKS ACCORDING TO MANUFACTURER'S WRITTEN INSTRUCTIONS. PERFORM THE FOLLOWING STARTUP CHECKS FOR EACH PUMP BEFORE STARTING:

3.2.1. VERIFY THAT PUMP IS FREE TO ROTATE BY HAND. IF PUMP IS BOUND OR DRAGS, DO NOT OPERATE UNTIL CAUSE OF TROUBLE IS DETERMINED AND CORRECTED.

3.2.2. VERIFY THAT PUMP IS ROTATING IN THE CORRECT DIRECTION.

3.3. AFTER INITIAL SYSTEM CLEANING, FLUSHING AND START-UP, REMOVE TEMPORARY START-UP MESH STRAINER FROM SUCTION DIFFUSERS.

3.4. TRAIN BATTELLE'S MAINTENANCE PERSONNEL TO ADJUST, OPERATE, AND MAINTAIN HYDRONIC PUMPS.

235700 HEAT EXCHANGERS

1. GENERAL

1.1. SUBMITTALS: TEST AND INSPECTION REPORT.

2. PRODUCTS - HEAT EXCHANGER SUPPLIED BY BATTELLE FOR INSTALLATION BY THE CONTRACTOR.

3. EXECUTION

3.1. EXAMINATION

3.1.1. EXAMINE AREAS FOR COMPLIANCE WITH REQUIREMENTS FOR INSTALLATION TOLERANCES AND FOR STRUCTURAL RIGIDITY, STRENGTH, ANCHORS, AND OTHER CONDITIONS AFFECTING PERFORMANCE OF HEAT EXCHANGERS.

3.1.2. EXAMINE ROUGHING-IN FOR HEAT-EXCHANGER PIPING TO VERIFY ACTUAL LOCATIONS OF PIPING CONNECTIONS BEFORE EQUIPMENT INSTALLATION.

3.1.3. PROCEED WITH INSTALLATION ONLY AFTER UNSATISFACTORY CONDITIONS HAVE BEEN CORRECTED.

3.2. INSTALL HEAT EXCHANGERS ON CAST-IN-PLACE CONCRETE EQUIPMENT BASES AND FASTEN LEGS TO BASE. INSTALL LEVEL AND PLUMB IN ACCORDANCE WITH MANUFACTURER'S RECOMMENDATIONS.

3.3. PIPING CONNECTIONS

3.3.1. COORDINATE PIPING INSTALLATIONS AND SPECIALTY ARRANGEMENTS WITH DRAWINGS AND WITH REQUIREMENTS SPECIFIED IN PIPING SYSTEMS.

3.3.2. COMPLY WITH REQUIREMENTS FOR PIPING SPECIFIED IN SECTION 232113 "HYDRONIC PIPING." DRAWINGS INDICATE GENERAL ARRANGEMENT OF PIPING, FITTINGS, AND SPECIALTIES.

3.3.3. INSTALL PIPING ADJACENT TO HEAT EXCHANGERS TO ALLOW SPACE FOR SERVICE AND MAINTENANCE OF HEAT EXCHANGERS. ARRANGE PIPING FOR EASY REMOVAL OF HEAT EXCHANGERS.

3.3.4. INSTALL SHUTOFF VALVES AT HEAT-EXCHANGER INLET AND OUTLET CONNECTIONS.

3.3.5. INSTALL TEMPERATURE GAUGE AND PRESSURE GAUGE ON EACH HEAT-EXCHANGER FLUID INLET AND OUTLET PIPE.

3.4. CLEANING

3.4.1. AFTER COMPLETING SYSTEM INSTALLATION, INCLUDING OUTLET FITTING AND DEVICES, INSPECT EXPOSED FINISH. REMOVE BURRS, DIRT, AND CONSTRUCTION DEBRIS, AND REPAIR DAMAGED FINISHES.

3.4.2. ISOLATE HEAT EXCHANGERS FROM PIPING BEFORE FLUSHING PIPING. IF A VALVE IS USED TO ISOLATE EQUIPMENT, ITS CLOSURE SHALL BE CAPABLE OF SEALING AGAINST TEST PRESSURE WITHOUT DAMAGE TO VALVE. INSTALL BLIND FLANGES IN FLANGED JOINTS TO ISOLATE EQUIPMENT.

3.4.3. FLUSH HEAT-EXCHANGER PIPING SYSTEMS WITH CLEAN WATER; THEN REMOVE AND CLEAN OR REPLACE STRAINER SCREENS BEFORE REOPENING FLOW TO HEAT EXCHANGERS.

3.5. FIELD QUALITY CONTROL

3.5.1. ENGAGE A FACTORY-AUTHORIZED SERVICE REPRESENTATIVE TO TEST AND INSPECT COMPONENTS, ASSEMBLIES, AND EQUIPMENT INSTALLATIONS, INCLUDING CONNECTIONS.

3.5.2. TESTS AND INSPECTIONS

3.5.2.1. LEAK TEST: AFTER INSTALLATION, CHARGE SYSTEM AND TEST FOR LEAKS. REPAIR LEAKS AND RETEST UNTIL NO LEAKS EXIST.

3.5.2.2. TEST AND ADJUST CONTROLS AND SAFETIES. REPLACE DAMAGED AND MALFUNCTIONING CONTROLS AND EQUIPMENT.

3.5.2.3. HEAT EXCHANGER WILL BE CONSIDERED DEFECTIVE IF IT DOES NOT PASS TESTS AND INSPECTIONS.

3.5.2.4. PREPARE TEST AND INSPECTION REPORTS.

3.6. DEMONSTRATION: TRAIN BATTELLE'S MAINTENANCE PERSONNEL TO ADJUST, OPERATE, AND MAINTAIN HEAT EXCHANGERS.

DIVISION 26 - ELECTRICAL

260500 BASIC ELECTRICAL MATERIALS AND METHODS

1. GENERAL

1.1. ELECTRICAL INSTALLATION SHALL BE IN ACCORDANCE WITH NATIONAL ELECTRICAL CODE (NEC) VERSION 2020. INSTALLATION WILL BE CHECKED FOR CODE COMPLIANCE BY A PNNL DESIGNATED INSPECTOR. REWORK MAY BE REQUIRED TO MEET CODE AS NEEDED.

1.2. ANY CONFLICTS BETWEEN THE ENGINEERING DRAWINGS AND ELECTRICAL CODE MUST BE RESOLVED WITH THE DESIGN ENGINEER BEFORE PROCEEDING WITH INSTALLATION.

1.3. ELECTRICAL COMPONENT IDENTIFICATION SHALL CONFORM WITH BATTELLE ADMINISTRATIVE PROCEDURE ADM-064. USE BLACK LETTERS ON WHITE BACKGROUND FOR NORMAL POWER. LETTERS SHALL BE 3/8" MINIMUM HEIGHT.

1.4. ELECTRICAL OUTAGES OF EXISTING CIRCUITS SHALL BE SCHEDULED TO ALLOW FOR PLANNED SHUTDOWN OF EXISTING EQUIPMENT.

1.5. PULL, JUNCTION AND SPLICE BOXES SHALL BE FURNISHED AND INSTALLED, EVEN IF NOT SHOWN ON DRAWINGS.

1.6. OUTDOOR RATED COMPRESSION TYPE FITTINGS SHALL BE USED WITH EMT WHERE EXPOSED TO WEATHER.

1.7. UNDERGROUND RACEWAYS SHALL BE RIGID METAL CONDUIT FOR VERTICAL AND 90 DEGREES, AND RMC OR PVC FOR HORIZONTAL RACEWAYS. PROVIDE MAGNETIC MARKING TAPE 12" ABOVE CONDUIT.

1.8. ALL INSTALLED ELECTRICAL EQUIPMENT SHALL BE LISTED, LABELED OR OTHERWISE INDICATED AS ACCEPTABLE BY A NATIONALLY ACCREDITED TESTING LABORATORY (UL LISTED AND LABELED EQUIPMENT). EXCEPTIONS TO THE UL LISTING OF ONE OF A KIND EQUIPMENT WILL BE INSPECTED FOR CONFORMANCE WITH THE NATIONAL ELECTRICAL CODE.

1.9. EXTERIOR ABOVE GRADE RACEWAYS SHALL BE RIGID METAL CONDUIT WHERE EXPOSED TO MECHANICAL DAMAGE.

1.10. INTERIOR RACEWAYS SHALL BE EMT OR FLEXIBLE METAL CONDUIT AS ALLOWED BY NEC. USE FLEXIBLE METAL CONDUIT FOR CONNECTIONS TO VIBRATING EQUIPMENT (CHILLER, PUMPS).

1.11. SURFACE MOUNTED EMT SHALL RUN PARALLEL TO CEILING AND VERTICAL RUNS SHALL BE PERPENDICULAR TO FLOOR. SUPPORT AS REQUIRED BY NEC.

1.12. IN WET LOCATIONS, INSULATED CONDUCTORS SHALL BE COPPER WITH FLAME RETARDANT MOISTURE AND HEAT RESISTANT, THERMOPLASTIC, 600 VOLT (THWN) INSULATION.

1.13. WIRE SHALL BE COPPER, #12 AWG MINIMUM SIZE, FOR POWER WIRING, WITH 90° C TEMPERATURE RATED, FLAME RETARDANT, HEAT RESISTANT, THERMOPLASTIC 600 VOLT (THHN) INSULATION.

1.14. PROVIDE A GREEN EQUIPMENT GROUND WIRE, #12 AWG COPPER MINIMUM, FOR ALL NEW CIRCUITS. SIZE IN ACCORDANCE WITH NEC 250.122.

1.15. FIELD CONTROL AND TESTING

1.15.1. FOR FEEDER AND BRANCH CIRCUITS OF 60 AMPS AND LARGER, 600V MAXIMUM. PERFORM INSULATION RESISTANCE TEST ON EACH CONDUCTOR USING A MEGOHMMETER WITH RESPECT TO GROUND AND ADJACENT CONDUCTORS APPLIED POTENTIAL SHALL BE 1000 VOLTS DC FOR 600V RATED CABLE. TEST DURATION SHALL BE ONE MINUTE.

1.15.2. TEST FOR CORRECT VOLTAGE AT THE PUMP TERMINALS.

1.15.3. VERIFY CORRECT PHASE ROTATION FOR THE PUMPS.

1.15.4. SUBMIT TESTING DOCUMENTATION FOR CONDUCTOR INSULATION RESISTANCE TEST AND CORRECT VOLTAGE TEST.

1.15.5. TORQUE CONDUCTOR LUGS AT PUMP TERMINALS, ADJUSTABLE SPEED DRIVE TERMINALS AND DISCONNECT SWITCH TERMINALS PER MANUFACTURER'S RECOMMENDATIONS WITH A CALIBRATED TORQUE WRENCH. PROCESS TO BE WITNESSED BY BATTELLE.

1.15.6. PROVIDE EQUIPMENT IDENTIFICATION LABELS ON ASD'S AND DISCONNECT SWITCHES. PROVIDE CIRCUIT IDENTIFICATION ON ASD'S AND DISCONNECT SWITCHES. UPDATE CIRCUIT/PANEL DIRECTORIES. PROVIDE COPY TO CONSTRUCTION MANAGER AND BUILDING ENGINEER.

1.16. ELECTRICAL CONDUCTORS SHALL BE COLOR CODED TO MEET IDENTIFICATION REQUIREMENTS IN NEC 210.5(C) AS FOLLOWS:

1.16.1. 480V, 3 PHASE, A, B, C COLORS RED, YELLOW AND BLUE, RESPECTIVELY. NEUTRAL WHITE OR GRAY EXCEPT WHEN INSTALLED IN CONDUIT SHARED WITH 120V TO GROUND. IN THOSE CASES THE 277V TO GROUND SHOULD HAVE A WHITE WITH RED STRIPE NEUTRAL.

1.16.2. 208/120V, 3-PHASE, 4-WIRE, A,B,C COLORS: BLACK, PURPLE, AND BROWN, RESPECTIVELY.

2. PRODUCTS - NOT USED

3. EXECUTION - NOT USED

260523 - CONTROL VOLTAGE ELECTRICAL POWER CABLES

1. GENERAL

1.1. SUBMITTALS: PRODUCT DATA FOR EACH TYPE OF PRODUCT.

2. PRODUCTS/EXECUTION

2.1. MANUFACTURERS: SUBJECT TO COMPLIANCE WITH REQUIREMENTS, OR COMPARABLE PRODUCT BY ONE OF THE FOLLOWING:

2.1.1. ENCORE WIRE CORPORATION

2.1.2. GENERAL CABLE TECHNOLOGIES CORPORATION

2.1.3. SOUTHWIRE COMPANY

2.2. CONTROL AND SIGNAL CIRCUIT CONDUCTORS AS FOLLOWS:

2.2.1. CLASS 1 CONTROL CIRCUITS: STRANDED COPPER, TYPE THHN-THWN.

2.2.2. CLASS 2 AND 3 CONTROL CIRCUITS: STRANDED COPPER; CABLE TYPES CL2, CL3, CM, CMG, CMP OR OTHERS AS ALLOWED BY NEC ARTICLE 725.

2.3. COMPLY WITH REQUIREMENTS IN SECTION 260500 FOR PATHWAYS.

2.4. INSTALLATION OF CONDUCTORS AND CABLES AS FOLLOWS:

2.4.1. INSTALL CABLES AND CONDUCTORS IN EMT, CONCEALED IN BUILDING FINISHES TO EXTENT FEASIBLE. JUNCTION BOX COVERS FOR RACEWAYS 50V OR LESS SHALL BE PAINTED GREEN.

2.4.2. CABLES/CONDUCTORS AS FOLLOWS:

2.4.2.2. CABLE JACKET COLOR:

2.4.2.2.1. SENSOR CABLE: WHITE

2.4.2.2.2. MSTP/FC/N2 CABLE: BLUE

2.4.2.2.3. SA BUS/CONTROLLER EXPANSIONS/THERMOSTAT CABLE: BROWN

2.4.2.2.4. MODBUS CABLE: GREEN

2.4.2.3. CONDUCTOR SIZE: IF MANUFACTURER RECOMMENDED SIZES VARY FROM SPECIFICATION SUBMIT FOR APPROVAL BEFORE INSTALLING.

2.4.2.3.1. SENSOR CONDUCTORS: #18 AWG SHIELDED ANIXTER #CBL-18/*-PLN.

2.4.2.3.2. MSTP/FC/N2 CONDUCTORS: #22 AWG SHIELDED, ANIXTER #CBL-22/3-FC-PLN.

2.4.2.3.3. SA BUS/CONTROLLER EXPANSIONS/THERMOSTAT CONDUCTORS: #22 AWG, ANIXTER #CBL-22/2P-SA-PLN.

2.4.2.3.4. MODBUS CONDUCTORS: #22 AWG SHIELDED, ANIXTER #CBL-22/*-PLN.

2.4.3. SPLICED CABLES NOT ALLOWED.

2.4.4. DO NOT INSTALL CABLES IN SAME CONDUIT AS HIGH VOLTAGE (50 VOLTS AND HIGHER) CONDUCTORS.

2.4.5. BUNDLE, LACE, AND TRAIN CONDUCTORS TO TERMINAL POINTS WITHOUT EXCEEDING MANUFACTURER'S LIMITATIONS ON BENDING RADII.

2.4.6. DO NOT INSTALL BRUISED, KINKED, SCORED, DEFORMED, OR ABRADED CABLE. DO NOT SPLICE CABLE BETWEEN TERMINATION, TAP, OR JUNCTION POINTS. REMOVE AND DISCARD CABLE IF DAMAGED DURING INSTALLATION AND REPLACE IT WITH NEW CABLE.

2.4.7. LABEL EACH END OF CABLING FOR FC BUS AND INPUT/OUTPUT CABLING.

2.5. MINIMUM CONTROL CIRCUIT CONDUCTOR SIZES:

2.5.1. CLASS 1 REMOTE-CONTROL AND SIGNAL CIRCUITS #14 AWG.

2.5.2. CLASS 2 LOW-ENERGY, REMOTE-CONTROL, AND SIGNAL CIRCUITS, #18 AWG.

2.5.3. CLASS 3 LOW-ENERGY, REMOTE-CONTROL, ALARM, AND SIGNAL CIRCUITS, #18 AWG.

2.5.4. UNLESS OTHERWISE NOTED IN INSTALLATION OF CONDUCTORS AND CABLES SECTION.

2.6. FIELD QUALITY CONTROL: VISUALLY INSPECT CABLE PLACEMENT, CABLE TERMINATION, GROUNDING AND LABELING.

APPROVAL DATE 02/09/2021

REVISIONS DESCRIPTION

DOCUMENT NO S789008-G0-004		SERVICE REQUEST NO S789008
CURRENT REVISION	ORIGINAL	U. S. DEPARTMENT OF ENERGY PACIFIC NORTHWEST SITE OFFICE
DRAWN JM SCOTT	DRAWN JM SCOTT	Pacific Northwest Division — Battelle — Richland, Washington 99352
CHECKED DK CREVIER	CHECKED DK CREVIER	GENERAL SPECIFICATIONS
DRAFTING CHECKER SD BURNETT	DRAFTING CHECKER SD BURNETT	
ENGINEER JM SCOTT	ENGINEER JM SCOTT	
APVD DJ DE SMET	APVD DJ DE SMET	
OTHER	OTHER	PROJECT TITLE CHILLER (AIR-COOLED) REDUNDANT CHW PUMP INSTALLATION
OTHER	OTHER	SIZE D · BLDG 3410 · DWG NO G0-004 · REV NO 0 · SCALE NONE · SHEET 1 OF 1

PNNL-BATT_D [REV1 8-31-18]

PLOT NAME: S789008-G0-004.dwg
PLOT DATE: 2/18/21 10:40am
PLOT BY: SCOTT, JEFFERY M

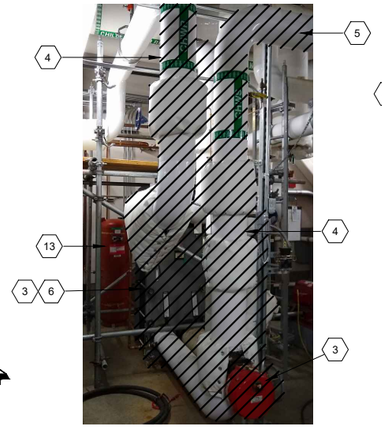

1 LHX DEMOLITION
SCALE: NONE

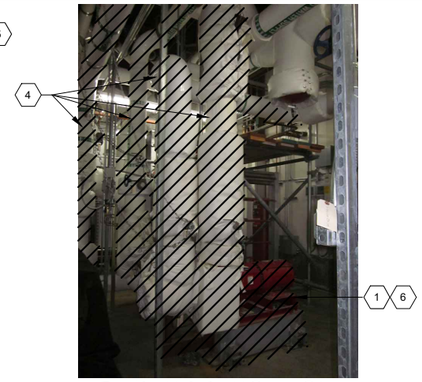

2 PUMP DEMOLITION
SCALE: NONE

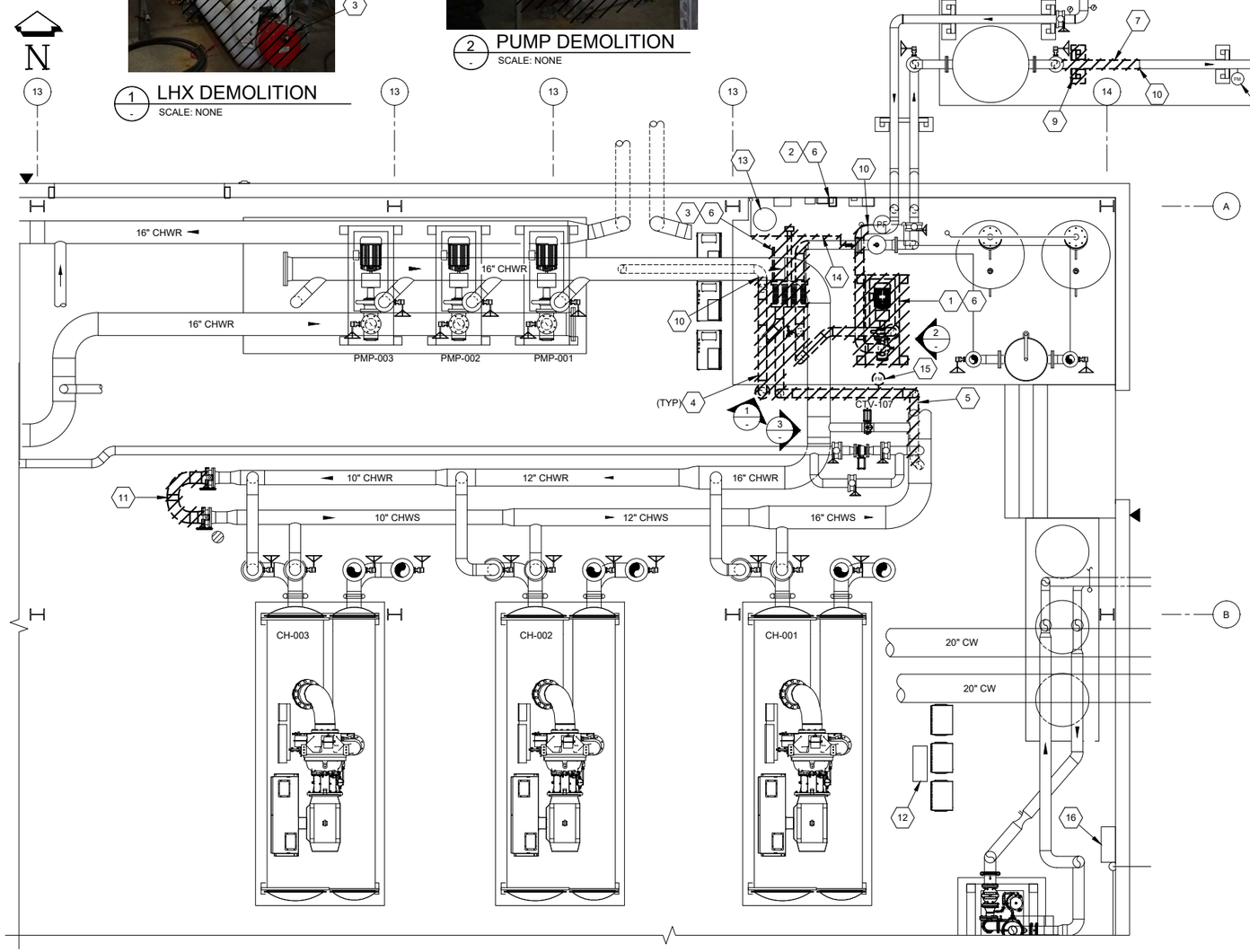

MECHANICAL DEMOLITION PLAN

1/4" = 1'-0" 0' 2' 4' 8' 12'
SCALE FEET

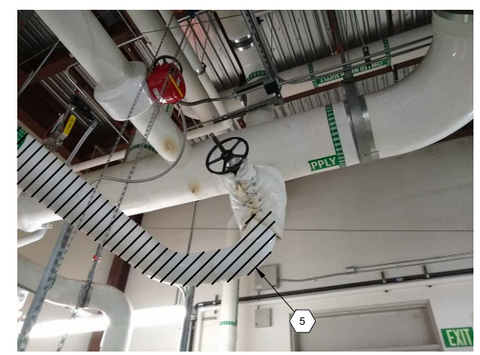

3 PIPE DEMOLITION
SCALE: NONE

GENERAL NOTES
(UNLESS OTHERWISE SPECIFIED)

1. SEE G0-001 FOR TITLE SHEET, LEGEND AND ABBREVIATIONS.
2. SEE G0-002 THROUGH G0-004 FOR PROJECT SPECIFICATIONS.

SHEET NOTES

1. DEMOLISH PUMP 3410-CHW-PMP-201, MOTOR, PUMP BASE, SPRING ISOLATORS, SUCTION GUIDE, INSULATION, MANUAL BALANCING VALVE, AND ASSOCIATED COMPONENTS.
2. DEMOLISH WALL-MOUNTED VFD (SEE ELECTRICAL).
3. DEMOLISH HEAT EXCHANGER WITH PIPING CONNECTIONS, FITTINGS, STRAINERS, MOTORIZED CONTROL VALVE CTV-106, MISCELLANEOUS VALVES, THERMOMETERS, PRESSURE GAUGES, CONTROL SENSORS AND ASSOCIATED COMPONENTS. RETAIN STRAINERS FOR RE-USE.
4. DEMOLISH 6" CHILLED WATER PIPE, FITTINGS, INSULATION, HANGERS AND SUPPORTS TO EXTENT INDICATED.
5. DEMOLISH PIPING TO EXISTING GATE VALVE AT UNDERSIDE OF 16" CHWS PIPE. PROVIDE BLIND FLANGE ON DISCHARGE SIDE OF VALVE.
6. DEMOLISH CONTROL POINTS AT PUMP, PUMP VFD, AND HEAT EXCHANGER INCLUDING SENSORS, WIRING AND CONDUIT BACK TO CONTROL PANELS.
7. DEMOLISH SECTION OF 6" PIPE TO FACILITATE INSTALLATION OF PUMPS.
8. EXISTING FLOW METER TO REMAIN.
9. DEMOLISH PIPE SUPPORT.
10. PREPARE PIPE FOR RE-CONNECTION.
11. DEMOLISH 8" PIPE CONNECTING BUTTERFLY ISOLATION VALVES. PREPARE VALVES FOR RECONNECTION.
12. EXISTING CONTROLS ENCLOSURE "TEMP CHILLER NCE METASYS CONTROLLER". INSIDE THE ENCLOSURE, DISCONNECT POWER AND CONTROL WIRING FROM JOHNSON CONTROLS NETWORK CONTROL ENGINE (NCE) LABELED "CHLR SEQ NCE" AND REMOVE IT. TURN NCE OVER TO BATTELLE CONSTRUCTION MANAGER. LABEL WIRING FOR EACH DISCONNECTED CONTROL POINT IN PREPARATION FOR RE-TERMINATION ON REPLACEMENT CONTROLLER AS SHOWN ON S789001-M1-101. COORDINATE REMOVAL AND/OR CONNECTION OF CONTROL POINTS LOCATED ON EXISTING INPUT/OUTPUT MODULE (IOM TO REMAIN) AS NECESSARY.
13. EXPANSION TANK. RELOCATE AS NECESSARY TO INSTALL THE HEAT EXCHANGER AND PIPING AS SHOWN ON S789001-M1-101.
14. DEMOLISH 3/4" PIPE CONNECTED TO THE EXPANSION TANK. PREPARE FOR RE-CONNECTION.
15. REMOVE FLOW METER WITH ASSOCIATED PIPING, ISOLATION VALVE, NIPPLES, ETC. AND RETAIN FOR RE-USE.
16. EXISTING CONTROL ENCLOSURE "3410-CHW-CP-001".

APPROVAL DATE 02/09/2021

DOCUMENT NO S789008-D1-101		SERVICE REQUEST NO S789008
CURRENT REVISION	ORIGINAL	U. S. DEPARTMENT OF ENERGY PACIFIC NORTHWEST SITE OFFICE
DRAWN: JM SCOTT	DRAWN: JM SCOTT	Pacific Northwest Division — Battelle — Richland, Washington 99352
CHECKED: DK CREVIER	CHECKED: DK CREVIER	DEMOLITION MECHANICAL DEMOLITION PLAN
DRAFTING CHECKER: SD BURNETT	DRAFTING CHECKER: SD BURNETT	
ENGINEER: JM SCOTT	ENGINEER: JM SCOTT	
APVD: DJ DE SMET	APVD: DJ DE SMET	
OTHER	OTHER	PROJECT TITLE: CHILLER (AIR-COOLED) REDUNDANT CHW PUMP INSTALLATION
OTHER	OTHER	SIZE D · BLDG 3410 · DWG NO D1-101 · REV NO 0
		SCALE SHOWN · SHEET 1 OF 1

REVISIONS DESCRIPTION

PLOT NAME: S789008-D1-101.dwg
PLOT DATE: 2/9/2021 10:42am
PLOT BY: SCOTT, JEFFERY M

PNNL-BATT_D [REV1 8-31-18]

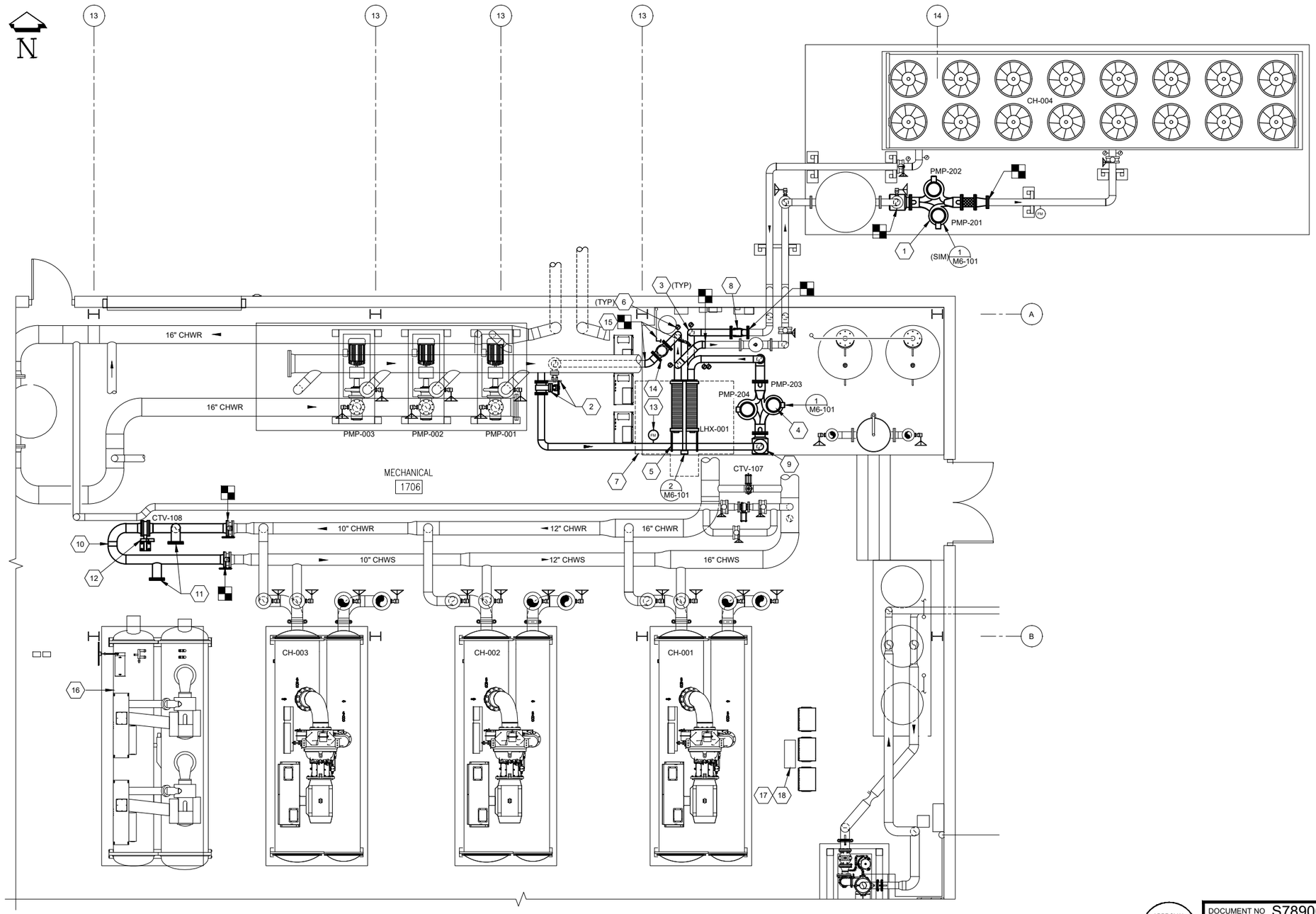

PIPING INSTALLATION PLAN

1/4" = 1'-0" 0' 2' 4' 8' 12'
SCALE FEET

GENERAL NOTES
(UNLESS OTHERWISE SPECIFIED)

1. SEE G0-001 FOR TITLE SHEET, LEGEND AND ABBREVIATIONS.
2. SEE G0-002 THROUGH G0-004 FOR PROJECT SPECIFICATIONS.
3. INSULATE PIPE AND FITTINGS AS SPECIFIED.

SHEET NOTES

1. INSTALL PUMPS CHW-PMP-201 & -202 WITH INLET SUCTION GUIDE ON SUPPORT STANDS. PROVIDE FLEX CONNECTOR ON INLET. PROVIDE FLEX CONNECTOR AND 8x6 REDUCER ON DISCHARGE.
2. PROVIDE 6" HOT TAP WITH GATE VALVE ON EXISTING 16" CHW RETURN MAIN. LOCATE BRANCH PIPE APPROXIMATELY 12" UPSTREAM OF THE EXISTING 6" BRANCH PIPE AND GATE VALVE.
3. PROVIDE 6" PIPE AND FITTINGS, ROUTE APPROXIMATELY AS INDICATED.
4. INSTALL PUMPS CHW-PMP-203 & -204 WITH INLET SUCTION GUIDE ON SUPPORT STANDS. PROVIDE FLEX CONNECTOR ON INLET. PROVIDE 8x6 REDUCING LONG RADIUS ELBOW AND FLEX CONNECTOR ON DISCHARGE.
5. INSTALL HEAT EXCHANGER LHX-001. SECURE TO CONCRETE PAD PER MANUFACTURER'S INSTRUCTIONS.
6. PROVIDE PRESSURE GAUGE AND TEMPERATURE GAUGE AT EACH HEAT EXCHANGER CHW INLET AND OUTLET PIPE. INSTALL GAUGES ON HORIZONTAL OR VERTICAL PIPING AT ACCESSIBLE LOCATION BETWEEN 4' AND 6' AFF.
7. MAINTAIN CLEARANCES AROUND HEAT EXCHANGER, APPROXIMATELY 30" ON EACH SIDE AND 20" AT REAR.
8. RE-INSTALL STRAINER IN HORIZONTAL PIPING.
9. RE-INSTALL STRAINER IN VERTICAL (DOWNFLOW) PIPING AT PUMP INLET.
10. PROVIDE 8" PIPE AND FITTINGS, CONNECT TO EXISTING OVERHEAD BUTTERFLY VALVES WITH WELDED FLANGE CONNECTION.
11. PROVIDE 8" BRANCH PIPE WITH FLANGED CONNECTION, FOR CONNECTION TO CHILLER CH-005. SEE DRAWING S804449-M1-101.
12. PROVIDE LINE-SIZE CONTROL VALVE, CHW-CTV-108.
13. RE-INSTALL FLOW METER. PROVIDE CONDUIT AND CONTROL CONDUCTORS NECESSARY TO RE-CONNECTO TO FMCS.
14. PROVIDE CHECK VALVE.
15. PROVIDE 3/4" TYPE L COPPER PIPE WITH SOLDER OR PRESS-FIT CONNECTIONS FOR EXPANSION TANK CONNECTION TO 6" PIPE. PROVIDE LINE-SIZED BALL ISOLATION VALVE.
16. CHILLER CH-005 INSTALLED PER SEPARATE DRAWING SET; SEE DRAWING S804449-M1-101.
17. PROVIDE SUPERVISORY NETWORK ENGINE (SNE), PROVIIDE FIELD APPLICATION CONTROLLER (FAC) AND INPUT/OUTPUT MODULE (IOM) AS NECESSARY TO RE-CONNECT EXISTING CONTROL POINTS AND CONTROL POINTS ADDED UNDER THIS PROJECT. PROVIDE ADDITIONAL CONTROL ENCLOSURE, PANEL, POWER, 24 VAC TRANSFORMERS, AND OTHER COMPONENTS NECESSARY FOR A COMPLETE CONTROLS SYSTEM FULLY INTEGRATED WITH EXISTING METASYS.
18. PROVIDE LABEL FOR ENCLOSURE: '3410-CHW-CP-002'.

APPROVAL DATE 02/09/2021

REVISIONS DESCRIPTION

CURRENT REVISION	ORIGINAL
DRAWN JM SCOTT	DRAWN JM SCOTT
CHECKED DK CREVIER	CHECKED DK CREVIER
DRAFTING CHECKER SD BURNETT	DRAFTING CHECKER SD BURNETT
ENGINEER JM SCOTT	ENGINEER JM SCOTT
APVD DJ DE SMET	APVD DJ DE SMET
OTHER	OTHER
OTHER	OTHER

DOCUMENT NO S789008-M1-101 | SERVICE REQUEST NO S789008

U. S. DEPARTMENT OF ENERGY
PACIFIC NORTHWEST SITE OFFICE

Pacific Northwest Division — Battelle — Richland, Washington 99352

MECHANICAL
PIPING INSTALLATION PLAN

PROJECT TITLE: CHILLER (AIR-COOLED) REDUNDANT CHW PUMP INSTALLATION

SIZE	BLDG	DWG NO	REV NO
D	3410	M1-101	0

SCALE SHOWN — SHEET 1 OF 1

PLOT BY: SCOTT, JEFFERY M
PLOT NAME: S789008-M1-101.dwg
PLOT DATE: 2/12/21 10:42am

PNNL-BATT_D [REV1 8-31-18]

GASKETED PLATE HEAT EXCHANGER SCHEDULE - BFCI

EQUIPMENT IDENTIFICATION NUMBER	MANUFACTURER & MODEL NO	SERVICE	COLD SIDE (CH-004)					HOT SIDE (PLANT CHW SYSTEM)					OPER WT (LB)	NOTES
			MEDIUM	FLOW (GPM)	EWT (°F)	LWT (°F)	ΔP (FT WC)	MEDIUM	FLOW (GPM)	EWT (°F)	LWT (°F)	ΔP (FT WC)		
3410-CHW-LHX-001	ARMSTRONG A63-150-207-1500	CHILLED WATER	30% PG	700	44	52.5	7.4	WATER	800	55	48	9.0	3,223	6" FLANGED INLET AND OUTLET CONNECTIONS

CONTROL VALVE SCHEDULE

EQUIPMENT IDENTIFICATION NUMBER	MANUFACTURER & MODEL NO	MEDIUM	FLOW (GPM)	Cv	SIZE (IN)	NORMAL POSITION	FAIL POSITION	ACTUATOR	ACTUATOR TYPE	VALVE TYPE	NOTES
3410-CHW-CTV-108	BRAY MKL2-080	WATER	1,200	2,800	8	CLOSED	CLOSED	MODULATING	ELECTRIC	BUTTERFLY	PROVIDE BRAY SERIES 70 ACTUATOR, 120V POWER INPUT

CENTRIFUGAL PUMP SCHEDULE - BFCI

EQUIPMENT IDENTIFICATION NUMBER	MANUFACTURER & MODEL NO	SERVICE	TYPE	GPM	TOTAL HEAD (FT WC)	IMPELLER DIAM (IN)	MOTOR HP	ELECTRICAL DATA			PUMP OPER WT (LB)	NOTES
								VOLT	PHASE	HZ		
3410-CHW-PMP-201 3410-CHW-PMP-202	ARMSTRONG 4302 8x8x10	30% PG	DUAL ARM VERT IN-LINE	700	77	10.19	25	460	3	60	2105	SUCTION GUIDE, SUPPORT STANDS
3410-CHW-PMP-203 3410-CHW-PMP-204	ARMSTRONG 4302 8x8x10	CHILLED WATER	DUAL ARM VERT IN-LINE	800	50	9.76	20	460	3	60	1,634	SUCTION GUIDE, SUPPORT STANDS

GENERAL NOTES
(UNLESS OTHERWISE SPECIFIED)

1. SEE G0-001 FOR TITLE SHEET, LEGEND AND ABBREVIATIONS.
2. SEE G0-002 THROUGH G0-004 FOR PROJECT SPECIFICATIONS.

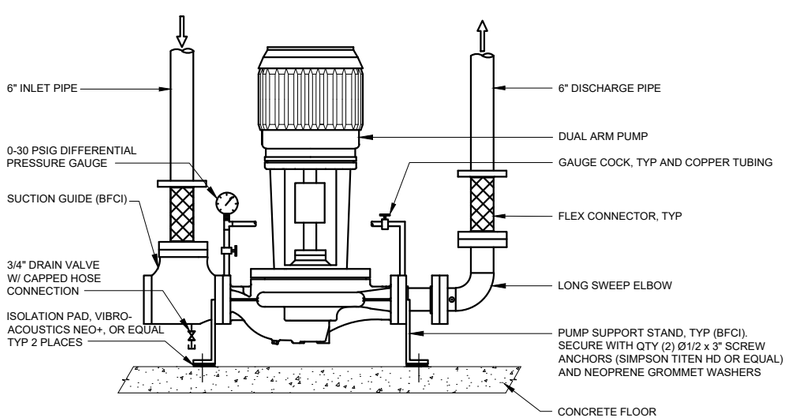

1 PUMP DETAIL
M1-101 SCALE: NONE

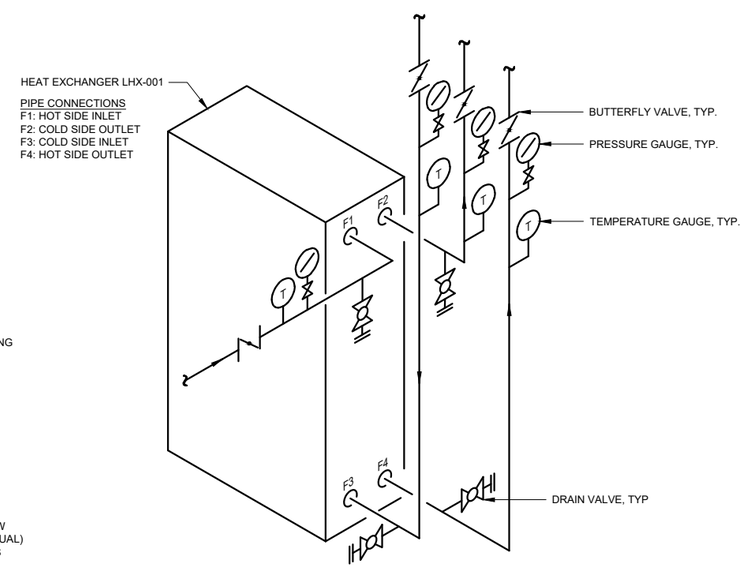

2 HEAT EXCHANGER PIPING DETAIL
M1-101 SCALE: NONE

APPROVAL DATE 02/09/2021

DOCUMENT NO S789008-M6-101	SERVICE REQUEST NO S789008
CURRENT REVISION	ORIGINAL
DRAWN JM SCOTT	DRAWN JM SCOTT
CHECKED DK CREVIER	CHECKED DK CREVIER
DRAFTING CHECKER SD BURNETT	DRAFTING CHECKER SD BURNETT
ENGINEER JM SCOTT	ENGINEER JM SCOTT
APVD DJ DE SMET	APVD DJ DE SMET
OTHER	OTHER
OTHER	OTHER

U. S. DEPARTMENT OF ENERGY
PACIFIC NORTHWEST SITE OFFICE
Pacific Northwest Division — Battelle — Richland, Washington 99352

MECHANICAL EQUPMENT SCHEDULES AND DETAILS

PROJECT TITLE: CHILLER (AIR-COOLED) REDUNDANT CHW PUMP INSTALLATION

SIZE	BLDG	DWG NO	REV NO
D	3410	M6-101	0

SCALE NONE — SHEET 1 OF 1

REVISIONS DESCRIPTION

PNNL-BATT_D [REV1 8-31-18]

PLOT NAME: S789008-M6-101.DWG
PLOT DATE: 2/12/21 10:54AM PT
PLOT BY: SCOTT, JEFFERY M

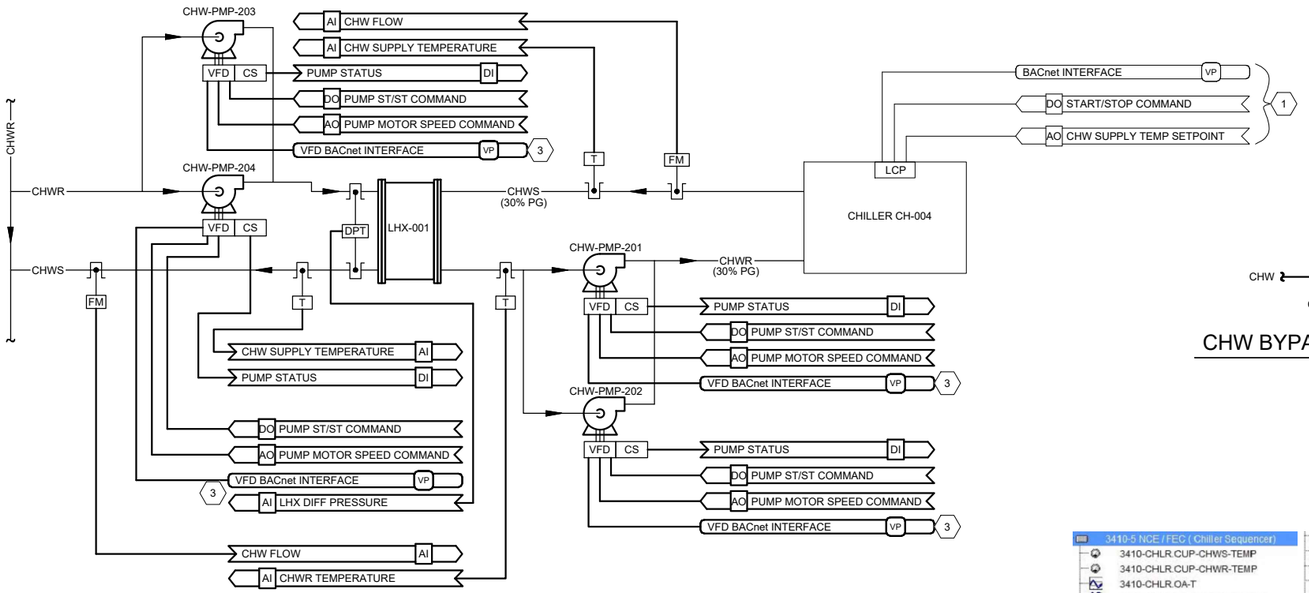

CH-004 CHW CONTROL DIAGRAM 2

SCALE: NONE

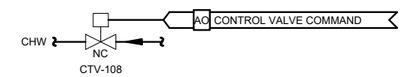

CHW BYPASS CONTROL DIAGRAM 2

SCALE: NONE

GENERAL NOTES

(UNLESS OTHERWISE SPECIFIED)

1. SEE G0-001 FOR TITLE SHEET, LEGEND AND ABBREVIATIONS.
2. SEE G0-002 THROUGH G0-004 FOR PROJECT SPECIFICATIONS.
3. SEE DRAWING S804449-M7-101 FOR ADDITIONAL CONTROLS WORK ASSOCIATED WITH THE INSTALLATION OF CHILLER CH-005.
4. CONTROLS CONTRACTOR SHALL RE-LABEL EXISTING CONTROL POINTS AT DEVICES, CONTROL PANELS AND IN METASYS PER DIRECTION FROM THE BATTELLE FMCS SPECIALIST.

SHEET NOTES

1. EXISTING CONTROL POINT TO REMAIN.
2. REVISE EXISTING CONTROL SEQUENCE AS INDICATED, TO ADD CONTROL OF PUMPS CHW-PMP-201, -202, -203, -204, BYPASS VALVE, AND TO IMPLEMENT SPECIFIED SEQUENCE OF CONTROL.
3. CONTROLS CONTRACTOR SHALL COORDINATE WITH THE BATTELLE FMCS SPECIALIST TO DETERMINE THE BEST LOCATION TO INTERCEPT THE MS/TP BACnet TRUNK AND CONFIGURE CONDUCTOR IN A DAISY-CHAIN CONFIGURATION. CABLE SHALL BE 22 AWG STRANDED 3-WIRE, ANIXTER CBL-22/3-FC-PLN OR EQUAL.
4. TRANSFER PROGRAM FROM REMOVED NCE TO INSTALLED SNE. RE-INSTALL/RE-MAP CONTROL POINTS FROM NCE TO INSTALLED SNE, LINK BACK TO GRAPHICS. COORDINATE WITH BATTELLE FMCS SPECIALIST.

CONTROLS LEGEND

SYMBOL	DESCRIPTION
DPT	DIFFERENTIAL PRESSURE TRANSMITTER
LCP	LOCAL CONTROL PANEL
T	TEMPERATURE SENSOR
CS	CURRENT SENSOR
VFD	VARIABLE FREQUENCY DRIVE
FM	FLOW METER

POINT-NAME	AO	ANALOG OUTPUT
POINT-NAME	DO	DIGITAL OUTPUT
POINT-NAME	AI	ANALOG INPUT
POINT-NAME	DI	DIGITAL INPUT
POINT-NAME	VP	VIRTUAL POINT

CHILLER SEQUENCE OF OPERATION 2 4

GENERAL

1. SETPOINTS DESCRIBED IN THE SEQUENCE OF OPERATION SHALL BE ADJUSTABLE FROM THE GRAPHICAL INTERFACE.
2. PROVIDE MANUAL GRAPHICAL MAINTENANCE SWITCH FOR PUMPS 201, 202, 203 AND 204 TO REMOVE FROM START-UP AND OPERATIONAL SEQUENCE.
3. INTERLOCK ALARMS WITH STATUS OF EACH PUMP TO PREVENT NUISANCE ALARMS DURING NORMAL START-UP AND SHUT-DOWN OF SYSTEM.

LOW/HIGH COOLING LOAD CONTROL

1. EXISTING MODE INDICATION ON GRAPHIC FOR LOW LOAD OR HIGH LOAD CHILLER STAGING CONTROL AND GRAPHICAL MANUAL SELECTION OF MODE TO REMAIN.
2. WHEN CHILLER CH-004 IS OPERATING AT 95% PEAK CAPACITY AND IS UNABLE TO MAINTAIN THE HEAT EXCHANGER HOT SIDE LEAVING WATER TEMPERATURE SETPOINT FOR MORE THAN 15 MINUTES OR THE CALCULATED COOLING TONNAGE DURING THE LOW LOAD MODE RISES ABOVE 230 TONS FOR MORE THAN 20 MINUTES, DISABLE CHILLER CH-004, PUMP CHW-PMP-201/202, PUMP CHW-PMP-203/204, CLOSE HEAT EXCHANGER FLOW CONTROL VALVE CHW-CTV-106 AND ENABLE HIGH COOLING MODE.

HIGH COOLING LOAD MODE

1. SEE S804449-M7-101 FOR HIGH LOAD MODE CONTROL SEQUENCE..

LOW COOLING LOAD CONTROL

1. WHEN LOW COOLING MODE IS ENABLED, START HEAT EXCHANGER LEAD PUMP AND CHILLER CH-004 LEAD PUMP. WHEN FLOW IS PROVEN, ENABLE CHILLER CH-004.
2. CHILLER INTEGRAL CONTROLS OPERATE CHILLER TO MAINTAIN THE CHILLED WATER SUPPLY TEMPERATURE (HEAT EXCHANGER COLD SIDE ENTERING WATER TEMPERATURE) SETPOINT OF 2 DEG F BELOW THE HEAT EXCHANGER HOT SIDE LEAVING WATER TEMPERATURE. LIMIT CHILLED WATER SUPPLY TEMPERATURE SETPOINT BETWEEN A MINIMUM OF 42 DEG F AND A MAXIMUM OF 48 DEG F.
3. BYPASS VALVE CTV-107 AND CTV-108 CONTROL

3.1. CHILLER BYPASS VALVE CTV-107 TO REMAIN CLOSED.
3.2. WHEN CHILLER CH-004 IS ENABLED AND CHILLERS 001, 002 AND 003 ARE DISABLED, OPEN CHILLER BYPASS VALVE CTV-108.
3.3. WHEN CHILLER CH-004 IS DISABLED, BYPASS VALVE CTV-108 SHALL BE CLOSED.

4. HEAT EXCHANGER PUMP CHW-PMP-203/204 CONTROL

4.1. FMCS DESIGNATES LEAD/LAG STATUS OF EACH PUMP. ROTATE PUMP STATUS WEEKLY TO EQUALIZE RUNTIME OF EACH PUMP. PROVIDE A MANUAL ROTATE BUTTON ON GRAPHIC.

4.2. START THE LEAD PUMP AND MODULATE PUMP SPEED TO MAINTAIN THE HEAT EXCHANGER LEAVING CHILLED WATER TEMPERATURE SETPOINT. THE SETPOINT SHALL BE 5 DEG F BELOW THE PLANT SYSTEM CHILLED WATER SETPOINT WITH A MINIMUM OF 46 DEG F. LIMIT THE PUMP SPEED BETWEEN 350 GPM MINIMUM AND 800 GPM MAXIMUM.

5. CHILLER PUMP CHW-PMP-201/202 CONTROL

5.1. FMCS DESIGNATES LEAD/LAG STATUS OF EACH PUMP. ROTATE PUMP STATUS WEEKLY TO EQUALIZE RUNTIME OF EACH PUMP. PROVIDE A MANUAL ROTATE BUTTON ON GRAPHIC.

5.2. START LEAD PUMP AND MODULATE PUMP SPEED TO MAINTAIN THE CHILLER RETURN WATER TEMPERATURE SETPOINT. THE SETPOINT SHALL BE 10 DEG F ABOVE THE CHILLED WATER PLANT SUPPLY TEMPERATURE SETPOINT. LIMIT THE PUMP SPEED BETWEEN 330 GPM MINIMUM AND 700 GPM MAXIMUM.

6. SAFETIES AND ALARMS

6.1. A SPECIFIC CHILLER FAILURE ALARM INITIATES AT THE OPERATOR WORKSTATION ANYTIME THE CHILLER INDICATES AN ALARM CONDITION FOR MORE THAN 60 SECONDS. THE SYSTEM DISABLES AND LOCKS OUT THE FAILED CHILLER UNTIL RESET BY OPERATOR. THE SYSTEM THEN STARTS A LAG CHILLER.

6.2. INITIATE A PUMP FAILURE ALARM AT THE OPERATOR WORKSTATION ANYTIME PUMP CHW-PMP-201 STATUS DOES NOT MATCH THE COMMAND FOR MORE THAN 60 SECONDS. DISABLE THE PUMP, DISABLE CHILLER CH-004. SWITCH MODE TO HIGH LOAD CONTROL. MANUAL RESET REQUIRED.

MISCELLANEOUS MONITORING AND CONTROL

1. MONITOR AND DISPLAY DIFFERENTIAL PRESSURE ACROSS HOT SIDE OF HEAT EXCHANGER CHW-LHX-001.
2. MONITOR AND DISPLAY FLOW RATE THROUGH EACH SIDE OF THE HEAT EXCHANGER.
3. CALCULATE AND DISPLAY HEAT EXCHANGER EFFICIENCY.

3410-5 NCE / FEC (Chiller Sequencer)

3410-CHLR.CUP-CHWS-TEMP
3410-CHLR.CUP-CHWR-TEMP
3410-CHLR.OA-T
3410-CHLR.LO-SYSTEM-ENABLE
3410-CHLR.HI-SYSTEM-ENABLE
3410-CHLR.CW-TOWER-BASIN-ALM
3410-CHLR.CHW-CTV-105-OUT
3410-CHLR.CH-001-CHW-DP
3410-CHLR.CH-002-CHW-DP
3410-CHLR.CH-003-CHW-DP
3410-CHLR.CH-004-CHW-DP
3410-CHLR.CHW-CTV-106-OUT
3410-CHLR.CH-ALARM-DELAY
3410-CHLR.CH-VALVE-QTY
3410-CHLR.CH-CHW-MIN-FLOW-SP
3410-CHLR.REORDER-CH
3410-CHLR.CH-TOT-CHW-FLOW
3410-CHLR.CHW-MIN-FLOW
3410-CHLR.CH-1-FLOW-SWCH-SP
3410-CHLR.CH-2-FLOW-SWCH-SP
3410-CHLR.CH-3-FLOW-SWCH-SP
3410-CHLR.CH-4-FLOW-SWCH-SP
3410-CHLR.CH-1-CHW-FLOW
3410-CHLR.CH-2-CHW-FLOW
3410-CHLR.CH-3-CHW-FLOW
3410-CHLR.CH-4-CHW-FLOW
3410-CHLR.CH-004-CHW-FLOW
3410-CHLR.CH-1-ALARM
3410-CHLR.CH-2-ALARM
3410-CHLR.CH-3-ALARM
3410-CHLR.CHILLER-LOAD
3410-CHLR.CHW-CW-STATUS
3410-CHLR.Max Error
3410-CHLR.Stabilization Delay
3410-CHLR.Min Error
3410-CHLR.Error
3410-CHLR.Rate Limit
3410-CHLR.Area per Chiller
3410-CHLR.Min Change Rate
3410-CHLR.Max Change Rate
3410-CHLR.CH-1-ORDER
3410-CHLR.CH-2-ORDER
3410-CHLR.CH-3-ORDER
3410-CHLR.CH-1-EN
3410-CHLR.CH-2-EN
3410-CHLR.CH-3-EN
3410-CHLR.CH-4-EN
3410-CHLR.CH-RUNNING
3410-CHLR.CH-ROTATE-STATE
3410-CHLR.CH-1-ENABLE
3410-CHLR.CH-2-ENABLE
3410-CHLR.CH-3-ENABLE
3410-CHLR.CH-PMP-DOWN-TIME
3410-CHLR.CH-LOAD-STG-SP
3410-CHLR.CH-STAGE-DOWN-DALAY
3410-CHLR.CH-STAGE-UP-DELAY
3410-CHLR.CH-STABILIZING-DELAY
3410-CHLR.CH-001-CHW-FLOW
3410-CHLR.CH-002-CHW-FLOW
3410-CHLR.CH-003-CHW-FLOW
3410-CHLR.CHW-CTV-107-OUT
3410-CHLR.CHW-SYS-PMP-STATUS
3410-CHLR.CW-SYS-PMP-STATUS
3410-CHLR.CH-004-CMD
3410-CHLR.CHWP-MINFLOW-SP
3410-CHLR.CHW-PMP-101-CMD
3410-CHLR.CHW-PMP-101-STATUS
3410-CHLR.CHW-PMP-101-ALARM
3410-CHLR.CHW-PMP-101-RESET
3410-CHLR.CHW-FLT-VLV-SCH
3410-CHLR.FLT-PMP-SCHED
3410-CHLR.CW-FLT-PUMP-C
3410-CHLR.CW-FLT-PMP-001-STATUS
3410-CHLR.CW-FLT-PMP-001-AMP
3410-CHLR.FLT-PUMP-ALM
3410-CHLR.CHW-CTV-101-CMD
3410-CHLR.CHW-CTV-102-CMD
3410-CHLR.CHW-CTV-103-CMD
3410-CHLR.PSF-CHW-RETURN-FLOW
3410-CHLR.CHW-CTV-101-OUT
3410-CHLR.CHW-CTV-102-OUT
3410-CHLR.CHW-CTV-103-OUT
3410-CHLR.CHW-CTV-009-OUT
3410-CHLR.CHW-BYPASS-FLOW
3410-CHLR.CHW-LHX-001-FLOW
3410-CHLR.CHW-PMP-101-VFD
3410-CHLR.CHW-LHX-CHWS-T
3410-CHLR.CHW-CH-004 CHW-SP
3410-CHLR.CHW-CH-004-SP
3410-CHLR.CHW-PMP-101-VFD-FLO-SP
3410-CHLR.CH-4-MIN-FLOW-SP
3410-CHLR.CH-4-MAX-FLOW-SP
3410-CHLR.HI-FLOW-AL-RESET
3410-CHLR.CHW-HX-HI-FLOW-AL
3410-CHLR.CH-4 Setpoint OSA Low
3410-CHLR.CH-4 Setpoint OSA High
3410-CHLR.CH-4 Setpoint Low
3410-CHLR.CH-4 Setpoint High
3410-CHLR.HI-MODE-PRE-COOL
3410-CHLR.MASTER-PLANT-START-UP
3410-CHLR.CHW-CTV-101-RL
3410-CHLR.CHW-CTV-102-RL
3410-CHLR.CHW-CTV-103-RL
VLV-107-SP-LOW-MODE
CH-1-EN-VALVE-SP
CH-2-EN-VALVE-SP
CH-3-EN-VALVE-SP
VLV-107 Input Range Low
VLV-107 Input Range High
VLV-107 Rate Limit

SNE CONTROL POINTS 4

SCALE: NONE

APPROVAL DATE 02/09/2021

REVISIONS DESCRIPTION

DOCUMENT NO S789008-M7-101		SERVICE REQUEST NO S789008
CURRENT REVISION	ORIGINAL	U. S. DEPARTMENT OF ENERGY PACIFIC NORTHWEST SITE OFFICE
DRAWN JM SCOTT	DRAWN JM SCOTT	Pacific Northwest Division — Battelle — Richland, Washington 99352
CHECKED CA HUGHES	CHECKED CA HUGHES	MECHANICAL CONTROLS AND SEQUENCE OF OPERATION
DRAFTING CHECKER SD BURNETT	DRAFTING CHECKER SD BURNETT	
ENGINEER JM SCOTT	ENGINEER JM SCOTT	
APVD DJ DE SMET	APVD DJ DE SMET	
OTHER	OTHER	PROJECT TITLE CHILLER (AIR-COOLED) REDUNDANT CHW PUMP INSTALLATION
OTHER	OTHER	SIZE D · BLDG 3410 · DWG NO M7-101 · REV NO 0
		SCALE SHOWN · SHEET 1 OF 1

PLOT NAME: S789008-M7-101.dwg
PLOT DATE: 2/9/2021 10:06am
PLOT BY: SCOTT, JEFFERY M

PNNL-BATT_D [REV1 8-31-18]

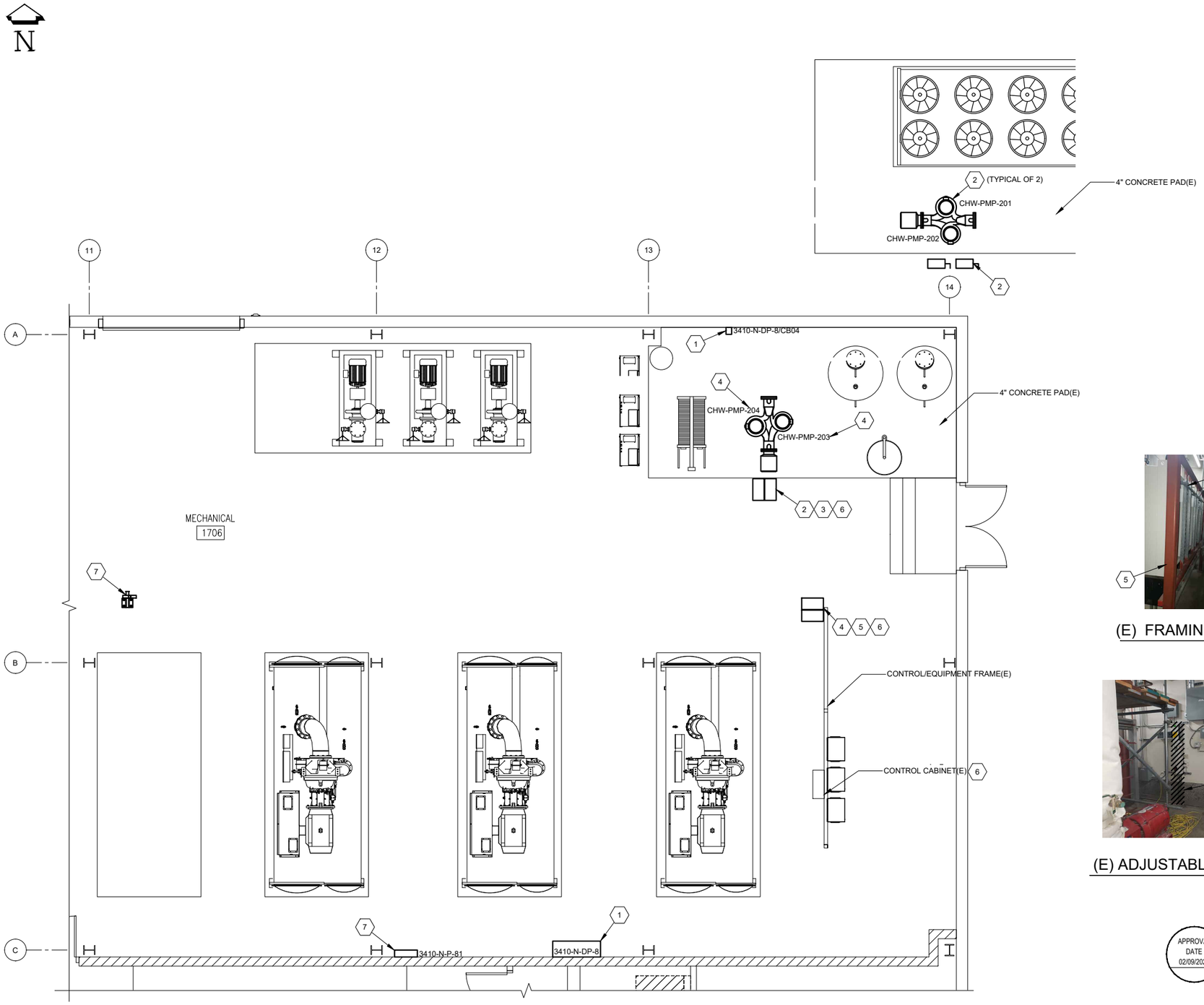

ELECTRICAL INSTALLATION PLAN

1/4" = 1'-0" 0' 2' 4' 8' 12' SCALE FEET

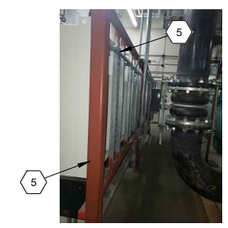

(E) FRAMING CHANNEL

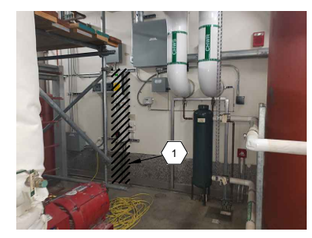

(E) ADJUSTABLE SPEED DRIVE

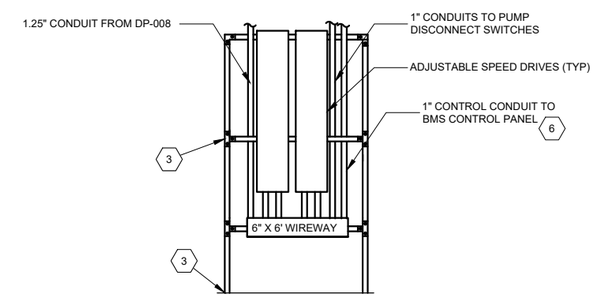

FRAMING CHANNEL ELEVATION

1/2" = 1'-0" 0' 1' 2' 4' 6' SCALE FEET

GENERAL NOTES

(UNLESS OTHERWISE SPECIFIED)

1. SEE G0-001 FOR TITLE SHEET, LEGEND AND ABBREVIATIONS.
2. SEE G0-003 AND G0-004 FOR PROJECT SPECIFICATIONS.

SHEET NOTES

1. DEMOLISH ADJUSTABLE SPEED DRIVE AND CONDUCTORS FROM DISTRIBUTION BOARD (DP-008/CB-04) TO ADJUSTABLE SPEED DRIVE. DEMOLISH CONTROL CONDUCTORS AND CONDUITS. DEMOLISH POWER CONDUCTORS AND CONDUIT TO EXISTING PUMP.
2. ROUTE 3-#6, 1-#10G IN 1" EMT CONDUIT FROM DRIVE LOAD SIDE TERMINALS TO 60A, 3P, NEMA 3R, FUSED HEAVY DUTY (WITH CLASS R FUSES) SWITCH LINE SIDE TERMINAL MOUNTED ON FRAMING CHANNEL NEAR PUMPS. ROUTE 3-#6, 1-#10G IN 1" PVC CONDUIT FROM SWITCH LOAD SIDE TERMINALS TO CHW-PMP-201,-202 INCOMING MOTOR TERMINALS USING FLEXIBLE CONDUIT AT MOTOR. (SEE ELECTRICAL DRAWINGS, S804449-E1-101, -E6-101 FOR ASD LINE SIDE CONNECTIONS).
3. PROVIDE FRAMING CHANNEL WITH 1.75" EMBEDMENTS (MINIMUM). FRAMING CHANNEL TO SUPPORT ADJUSTABLE SPEED DRIVES AND 6" X 6" WIREWAY.
4. ADJUSTABLE SPEED DRIVES ARE TO MOUNTED ON EXISTING/MODIFIED FRAMING CHANNEL. ROUTE 3-#8, 1-#10G IN 1" EMT CONDUIT FROM DRIVE LOAD SIDE TERMINALS TO CHW-PMP-203, -204 INCOMING MOTOR TERMINALS. (SEE ELECTRICAL DRAWINGS, S804449-E1-101, -E6-101 FOR VFD LINE SIDE CONNECTIONS).
5. EXTEND EXISTING FRAMING CHANNEL TO SUPPORT ADJUSTABLE SPEED DRIVES. DO NOT BLOCK ACCESS TO LB CONDUIT BODY. FRAMING CHANNEL SUPPORT STRUCTURE TO BE SIMILAR TO SHEET NOTE 3 ELEVATION.
6. PROVIDE CONTROL CONDUCTORS BETWEEN ADJUSTABLE SPEED DRIVES AND EXISTING CONTROL PANEL.
7. EXTEND 3-#12 IN 3/4" CONDUIT FROM EXISTING CONTROL VALVE (3410-CW-CTV-005) TO NEW CONTROL VALVE (3410-CW-CTV-108). EXISTING CONTROL VALVE IS FED FROM PANEL N-P-081.

APPROVAL DATE 02/09/2021

DOCUMENT NO S789008-E1-101		SERVICE REQUEST NO S789008
CURRENT REVISION	ORIGINAL	U. S. DEPARTMENT OF ENERGY PACIFIC NORTHWEST SITE OFFICE
DRAWN BJ GRAF	DRAWN BJ GRAF	Pacific Northwest Division — Battelle — Richland, Washington 99352
CHECKED KB HAMMOND	CHECKED KB HAMMOND	ELECTRICAL INSTALLATION PLAN, DETAILS AND ONE-LINE DIAGRAM
DRAFTING CHECKER SD BURNETT	DRAFTING CHECKER SD BURNETT	
ENGINEER BJ GRAF	ENGINEER BJ GRAF	
APVD DJ DE SMET	APVD DJ DE SMET	
OTHER	OTHER	PROJECT TITLE CHILLER (AIR-COOLED) REDUNDANT CHW PUMP INSTALLATION
OTHER	OTHER	SIZE D — BLDG 3410 — DWG NO E1-101 — REV NO 0
		SCALE SHOWN — SHEET 1 OF 1

REVISIONS DESCRIPTION

PLOT NAME: S789008-E-101.dwg
PLOT DATE: 2/9/2021 10:43am
PLOT BY: SCOTT, JEFFERY M.

PNNL-BATT_D [REV1 8-31-18]

Please be assured the health and safety of our collective personnel is our top priority as we continue to monitor the evolving situation. It is of paramount importance that you follow all requirements referenced to prevent the spread of COVID-19 as these key controls will support our ability to maintain a healthy workforce. Battelle appreciates your cooperation in observing these critical safety measures during this time.

Performing Daily Self-Checks

As part of the requirements for accessing PNNL premises and facilities, each subcontractor representative performing work that day will be required to perform a daily self-check. Each subcontractor representative should ask themselves:

In the past 14 days, have I experienced any of the following?

- A fever of 100.4°F (or higher) or a sense of being feverish
- New on-set of excessive or prolonged fatigue
- A new deep or persistent cough (either dry or productive of phlegm)
- Sore throat
- Runny or stuffy nose
- Difficulty breathing (feeling winded or struggling to draw in a full breath)
- Sudden or noticeable loss of taste or smell
- New onset of nausea, vomiting, or diarrhea
- A positive COVID-19 test result
- Waiting for COVID-19 test results
- A household member or close contact[1] tested positive for COVID-19 within the past 14 days
- An ill or symptomatic household member or close contact is awaiting test results for COVID-19.

☐ Each day, prior to accessing the premises and facilities, if the answer is “yes” to any of the questions above, the subcontractor representative is not allowed to access the PNNL premises and facilities.

☐ Daily self-checks can be recorded using one of the following options:

1. Technical Oversight Representative (TOR), Construction Manager (CM) or Supervisor documented pre job briefing.

2. If the subcontractor representative has a PNNL network ID and email address, the subcontractor representative may complete an online daily self-check.

3. Maintain a paper log. A log can take many formats, as long as the subcontractor documents the date, and certifies that its subcontractor representatives have completed the self-check every day they access PNNL premises or facilities.

[1] Close contact is defined by the guidance provided by the Washington State Department of Health.

PNNL COVID-19 Enhanced Safety Measures for Subcontractors

Please follow these requirements when onsite at PNNL:

Description
☐ Daily, verify employees have performed their self-check before they report to work.
☐ Complete PNNL issued non-staff (vendor/subcontractor) *Enhanced Safety Measures During COVID-19* training.
☐ Stay home or leave work if you develop, or suspect you are developing, symptoms.
☐ Maintain a minimum of 6 feet of distance between you and others; or
☐ If you must work within 6 feet of anyone, additional work practices must be developed and approved by PNNL (such as permanent or temporary barriers, eye coverings, etc.).
☐ Face coverings must be worn by everyone on all PNNL premises and in PNNL facilities (e.g. PNNL managed buildings, leased spaces, job trailers located on federal property, etc.). **NOTE 1:** Face coverings are not required when working alone in an office with the door closed, or when alone in a vehicle. When eating/drinking, face coverings may be temporarily removed only when at a distance greater than six feet from other individuals. Face coverings shall also be worn when working on any site on PNNL premises or facilities when the site is posted as a construction area; except when outside greater than 6 feet apart from other individuals. Other exceptions, which must be approved by PNNL, could include working alone with no chance of human interaction (e.g. equipment operator). • More information on an approved face covering (nose and mouth) can be found on the Washington State Department of Health (WDOH) website: (https://www.doh.wa.gov/Emergencies/COVID19). Under normal circumstances, PNNL subcontractors coming onsite are not allowed to wear anything that conceals their identities (e.g., Halloween masks, ski masks, etc.). In light of the WDOH's recommendation for individuals to wear face coverings, PNNL's policy is not to obscure one's face has been relaxed with the caveat that if requested or required by PNNL staff member or Security Officer for a badge check, the individual will temporarily remove their face covering for verification of identity following social distancing practices. **NOTE 2:** Face shields and face coverings with an exhalation valve are not approved for use on the PNNL premises, within PNNL managed or leased facilities, or within facilities on federal property.
☐ Wear eye coverings when working onsite to protect your eyes from aerosols potentially generated by a cough or sneeze when working with another person for short durations (less than 10 minutes total in a 24-hour period) who is less than six feet away. Working within six feet of another person for longer time periods requires additional review and approval (intermittent passing [hallway] is excluded from this requirement). Assure that safety glasses meet the safety requirements previously evaluated for the task, as prescribed in Acceptable Personnel Level (APL) postings, work planning and control documents, and other postings.

	Description
☐	Follow proper respiratory etiquette. Cough or sneeze into your sleeve, a tissue or cloth, or step out of the presence of others. In all cases cover your mouth and nose regardless of location. Immediately dispose of tissues in a regular trash receptacle.
☐	Wash your hands frequently with soap and water for 20 to 30 seconds. If soap and water are not available use an alcohol-based hand sanitizer.
☐	Avoid touching your eyes, nose, and mouth, with unwashed hands.
☐	Avoid touching common surfaces, if possible (e.g., open doors with your hip or forearm to engage the push bar or automatic door opener).
☐	Routinely clean and disinfect frequently touched surfaces during and prior to leaving your workspace. Clean shared equipment touch points before and after use.
☐	Keep personal equipment and food out of common spaces. If you used these spaces or items, clean and disinfect the space or item before and after use, then wash your hands.
☐	Only one person to a vehicle at a time. PNNL must approve more than one person traveling in a vehicle at a time. When an exception is approved, and more than one person shares a vehicle: • Face coverings are required • Utilize separate seat rows if available • Wipe down routinely touched surfaces, before and after use of the vehicle • Do not eat or drink • Do not place the vehicle's ventilation in recirculation mode • Minimize the time with more than one person in the vehicle (do not make additional stops, go directly from point A to point B).
☐	Limit the number of in-person meetings and do not gather in groups of 10 or more.
☐	Read and abide by all postings, including additional COVID-19 related postings.
☐	APL are not applicable once a laboratory space, workspace, shop area or mechanical area has been designated as a construction area. Common areas (lab, shops or mechanical areas) may require barriers if open air spaces are shared with PNNL staff. APL signs should be flipped over or covered once the subcontractor occupies the space. Note: For areas not considered part of the construction area, you are expected to follow all posted APLs and additional controls. If an area is not posted, the APL is assumed to be 1.
☐	If you are uncomfortable in any situation, you have the right to pause the evolution and contact the TOR, Construction Manager or Supervisor for resolution.
☐	Should you or a colleague become ill (i.e. present with a fever, cough, or respiratory illness) during the time on PNNL premises and facilities, please immediately leave the premises and notify the TOR, Construction Manager or Supervisor.

	Description
☐	If you are suspected by your medical provider of COVID-19 infection, are awaiting COVID-19 test results, involved in close contact tracing, or have had a positive confirmation through testing within the last seven days, please contact the TOR (the TOR will contact the Laboratory Pandemic Response Team). Isolation/quarantine guidance can be found on the WDOH website (https://www.doh.wa.gov/Emergencies/COVID19).

COVID-19 Additional Requirements – (Phase 2 Construction Restart Activity)

The requirements listed below are in addition to the *PNNL COVID-19 Enhanced Safety Measures for Subcontractors* and align with the Washington State Governor's *Phase 2 Construction Restart COVID-19 Job Site Requirements*.

YES	N/A	Description
		Prerequisites
☐		Review and comply with all *PNNL COVID-19 Enhanced Safety Measures for Subcontractors* (including the daily self-checks and non-staff *Enhanced Safety Measures During COVID-19* training).
☐		Review the Job Safety Analysis (JSA), update/modify as necessary for the work activities.
☐		Have the *PNNL COVID-19 Subcontractor Requirements* document (this document) readily available and have reviewed and comply with all "YES" line items.
YES	**N/A**	**Job Site Requirements**
☐		A site-specific COVID-19 Supervisor shall be designated by the subcontractor at every job site to monitor health of employees and enforce the COVID-19 job site safety plan. A designated COVID-19 Supervisor must be present at all times during construction activities. Note: 'Present at all times' means on the PNNL job site to ensure personnel are performing work safely and following COVID-19 work practices. The COVID-19 Supervisor may leave the job site briefly (e.g., attend a PNNL meeting, visit another PNNL job site, pick up a tool from a job trailer, pickup material from another site close by, etc.) but must be able to return to the job site if needed within 10 minutes.
☐		A safety stand-down/toolbox talk/tailgate training must be conducted on all job sites on the first day of returning to work to explain the protective measures in place for all workers. COVID-19 work practices should be a continued discussion at daily pre job meetings.
☐		Attendance will be communicated verbally, and the trainer will sign in each attendee for the COVID-19 safety training.
☐		COVID-19 safety requirements shall be visibly posted on each job site.
☐		Gatherings of any size must be precluded by taking breaks and lunch in shifts. Any time two or more persons must meet, ensure minimum 6 feet of separation.
☐	☐	Identify "choke points" and "high-risk areas" on job sites where workers typically congregate and control them so social distancing is always maintained.
☐		Minimize interactions when picking up or delivering equipment or materials, ensure minimum 6-foot separation.

YES	N/A	Description
☐		Subcontractors must provide appropriate eye protection that must be worn at all times by every employee while on the worksite.
☐		If appropriate PPE cannot be provided by the subcontractor, the work is not authorized to commence, recommence, or the worksite must be shut down.
☐	☐	Soap and running water shall be abundantly available onsite or it shall be provided by the subcontractor on all job sites for frequent handwashing. Workers should be encouraged to leave their workstations to wash their hands regularly, before and after going to the bathroom, before and after eating and after coughing, sneezing or blowing their nose.
☐	☐	Subcontractor provided alcohol-based hand sanitizers with greater than 60% ethanol or 70% isopropanol can also be used but are not a replacement for the water requirement.
☐	☐	Post, in areas visible to all workers, required hygienic practices, including not to touch face with unwashed hands or with gloves; washing hands often with soap and water for at least 20 seconds; use hand sanitizer with at least 60% alcohol; cleaning and disinfecting frequently touched objects and surfaces such as workstations, keyboards, telephones, handrails, machines, shared tools, elevator control buttons, and doorknobs; covering the mouth and nose when coughing or sneezing as well as other hygienic recommendations by the US CDC..
☐	☐	The subcontractor shall make disinfectants available to workers throughout the worksite and ensure cleaning supplies are frequently replenished.
☐	☐	Any worker performing construction craft work in Washington from any state that is not contiguous to Washington must self-quarantine for 14 days to become eligible to work on a job site in Washington. As an alternative to the quarantine provisions of this section, any worker performing construction craft work entering the state from a non-contiguous state, shall be considered eligible for work upon receipt of negative test results for COVID-19 administered within Washington State. If the individual leaves Washington State and returns to perform additional work, they must be retested and receive another negative result before resuming work.

Daily COVID-19 Pre-Job Briefing & Self-Check Certification | *Attendance Sheet*

TOR, CM or Supervisor: _____ _____ _____

Print Name *Signature* *Date*

Note: By signing this attendance sheet, you are certifying you have answered "no" to all of the questions on the self-checklist in the past 14 days.

Print Name	Signature	Phone No.	Email

PLAN FOR NOTIFYING EMPLOYEES
NOT TO REPORT TO WORK

The Hanford Administrative Committee, in accordance with Article XIII, Section 4., has determined that the following plan will be implemented by the EMPLOYER for the purpose of notifying employees covered by the Hanford Site Stabilization Agreement not to report to work.

The EMPLOYER will cause an announcement to be made over local radio stations broadcasting within the Tri-Cities and Yakima areas at least two hours prior to the employees' regular starting time advising that construction operations are closed and that the EMPLOYERS' employees should not report to work.

A general announcement will be considered to apply to all employees of the EMPLOYER, and to all activities of the EMPLOYER, except for those employees and/or activities which are specifically identified as not be affected by the announcement.

Further, employees will recognize and adhere to a similar announcement issued by the OWNER, the U.S. Department of Energy, and will assume that such general announcements addressing the Hanford site and/or Hanford employees will include employees of the EMPLOYERS.

The announcement will apply only to the shift immediately following the time of the announcement unless the announcement gives instructions to the contrary.

Every effort will be made by the EMPLOYER (or OWNER) to get the announcement on the following radio stations:

TRI-CITIES		YAKIMA
KALE - FM 95	KONA - AM 169	KUTI - AM 980
KZZK - FM 102.7	KORD - AM 870	KIT - AM 1280
KONA - FM 105.3	KIOK - AM 960	
KHWK - FM 106.5	KOTY - AM 1340	

APPENDIX "A"

HANFORD DAILY TRAVEL PAY

Daily Travel Pay for Construction Crafts will be paid as follows:

Area	Daily Pay
300	$18.50
400	$18.50
200 East	$22.00
200 West	$22.75
100 (All)	$23.50

BOILERMAKERS
APPENDIX A

Revised Wage Rates & Fringes

BOILERMAKERS

WAGE RATES:	01/01/19	01/01/20	**01/01/21**
General Foreman	Rate to be negotiated	Rate to be negotiated	Rate to be negotiated
Foreman	$41.06	$41.01	**$41.96**
Assistant Foreman	$39.81	$39.76	**$40.71**
Journeyman	$38.56	$38.51	**$39.46**

Apprentices shall receive the following percentage of the Journeyman's rate plus fringe benefits as indicated below, (indentured after 9/2/96):

			01/01/21
Level 1,	0 - 1000 hours	70%	**$27.62**
Level 1,	1001 - 2000 hours	75%	**$29.60**
Level 2,	2001 - 3000 hours	80%	**$31.57**
Level 2,	3001 - 4000 hours	85%	**$33.54**
Level 3A,	4001 - 5000 hours	90%	**$35.51**
Level 3B,	5001 - 6000 hours	95%	**$37.49**

FRINGE BENEFITS:

		01/01/19	01/01/20	**01/01/21**
Health & Welfare	$8.57	per hour worked, contribution	$8.57	$8.57
Pensions	$14.92	per hour worked, contribution	$15.22	**$15.52**
Apprenticeship	$1.50	per hour worked, contribution	$1.50	$1.50
Vacation	$3.50	per hour worked, contribution	$3.50	$3.50
National Annuity	$1.50	per hour worked, contribution	$1.50	$1.50
MOST	$0.34	per hour worked, contribution	$0.34	$0.34

Deductions, upon written authorization of employee:

Field Dues 6% of gross wages, including Vacation pay, deduction

	09/17/19
M.O.R.E. (Work Investment Fund)	$1.00 submitted as per hour paid

BRICKLAYERS
APPENDIX A

Revised Wage Rates and Fringes

WAGE RATES:	06/01/18	06/01/18	**06/01/2020**
Journeyman	$31.90	$32.05	**$32.96**
Foreman	Shall receive a minimum of $2.50 over the Journeyman rate.		

APPRENTICE RATES
06/01/2020

Six Month Period	Percent %	Hrs	**Basic Wages**	**Health & Welfare**	**NW Pension**	**IU & PPA Pension**	**APP Training**
A-1	50%	* 0 - 750 hours	**$16.48**	**$7.73**	$0.00	$0.00	**$0.62**
A-2	55%	751 - 2250 hours	**$18.13**	**$7.73**	**$7.17**	**$2.29**	**$0.62**
A-2	60%	2251 - 3000 hours	**$19.78**	**$7.73**	**$7.17**	**$2.29**	**$0.62**
A-2	70%	3001 - 3750 hours	**$23.07**	**$7.73**	**$7.17**	**$2.29**	**$0.62**
A-2	80%	3751 - 4500 hours	**$26.37**	**$7.73**	**$7.17**	**$2.29**	**$0.62**
A-2	90%	4501 - 5250 hours	**$29.66**	**$7.73**	**$7.17**	**$2.29**	**$0.62**
A-2	95%	5251 - 6000 hours	**$31.31**	**$7.73**	**$7.17**	**$2.29**	**$0.62**

**Probationary period of first 750 hours, no pension contributions will be made on behalf of apprentices during their first 750-hour probationary period. (Apprentices hired after April 1, 2012 will need 6000 hours to complete for JM trade).*

FRINGE BENEFITS:	06/01/18		06/01/19	**06/01/2020**
Health & Welfare	$7.53	per hour worked, contribution	$7.63	**$7.73**
Northwest Pension	$6.92	per hour worked, contribution	$6.92	**$7.17**
International Pension	$2.04	per hour worked, contribution	$2.16	**$2.29**
Intl App& Training	$0.49	per hour worked, contribution	$0.61	**$0.62**

Deductions, upon written authorization of employee:

	Amount specified by Local Union	06/01/18	06/01/19	**06/01/2020**
Dues & M/R Check off	Journeyman - Foreman	$2.36	$2.41	**$2.58**
	A2 - Above	$2.16	$2.21	**$2.13**
	A1	$1.96	$2.01	**$1.30**
C.U. / Vacation	A-1	$0.00	$0.00	$0.00
	A2 – Above	$1.50	$1.50	$1.50

CARPENTERS/MILLWRIGHTS
APPENDIX A

Revised Wage Rates and Fringes

CARPENTERS	06/01/19	**06/01/2020**
Journeyman Classification	$35.47	**$37.12**

FOREMAN - *Receives a **7%** an hour above Journeyman scale*
GENERAL FOREMAN - *Receives **14%** an hour above Journeyman scale*

****MILLWRIGHTS AND MACHINE ERECTORS**	06/01/19	**06/01/2020**
Journeyman Classification	$47.42	**$48.42**

FOREMAN - *Receives an 10% per hour above Journeyman scale*
GENERAL FOREMAN - *Receives **14%** per hour above Journeyman scale*

09/04/18
Certified Welder +2.5% *of the applicable journeyman scale per hour while performing welds required by the plans or specifications to be certified.*

PILEDRIVERS	06/01/19	**06/01/2020**
Journeyman Classification	$36.66	**$38.37**

FOREMAN - *Receives a **7%** an hour above Journeyman scale*
GENERAL FOREMAN - *Receives **14%** an hour above Journeyman scale*

DIVERS	06/01/19	**06/01/2020**
Divers Including Stand-By Diver	$41.23	**$43.06**
Diver Diving	$82.46	**$86.12**
Dive Master	$50.98	**$53.17**
Dive Supervisor	$83.96	**$87.62**
Diver Tender	$40.23	**$42.06**
Assistant Tender	$37.66	**$39.37**
Maniford Operator	$40.23	**$42.06**
Maniford Operator Mixed Gas	$44.23	**$46.06**
ROV Operator	$40.23	**$42.06**
ROV Tender/Technician	$37.66	**$39.37**

APPRENTICE RATES

*1st Period	60%	2nd Period	65%	3rd Period	70%	4th Period	75%
5th Period	80%	6th Period	85%	7th Period	90%	8th Period	95%

*Carpenters/Piledrivers: *No pension or 401k contributions to be paid for Apprentices 1st periods*
*Millwrights: *No pension contributions to be paid for Apprentices 1st periods*

Carpenters/Piledrivers/Divers:	06/01/19	**06/01/2020**	****Millwrights:**	06/01/19	**06/01/2020**
Health & Security	$6.20	**$6.40**	**Health and Security**	$8.06	**$8.51**
Pension*	$8.43	**$8.68**	**Pension***	$8.43	**$8.68**
Apprenticeship & Training	$0.65	**$0.68**	**Apprenticeship & Training**	$0.87	**$0.91**
401(k)	$1.60	$1.60	401(k)	$1.60	$1.60

Optional 401K deduction in $0.50 increments, up to $15.00 at the option of the Employee, (deduct from wages), applies to all Apprentices also

Deductions, upon written authorization of employee:

Dues Check off — Union dues deduction (deduct from net wages) is 4% of the taxable Journeyman dispatch wage of the applicable classification (Vacation & Dues are deducted from net pay and submitted to the Trust with benefit contributions).

Carpenter/Piledriver Vacation Deduction **$0.25** ***for each compensable hour (after taxes)***

Millwright Vacation Deduction $1.00 *for each compensable hour (after taxes)*

CEMENT MASONS
APPENDIX A

Revised Wage Rates and Fringes

WAGE RATES:	06/01/18	06/01/19	06/01/2020
Group I	$29.07	$30.21	$31.30
Group II	$29.69	$30.83	$31.92
Group III	$30.20	$31.34	$32.43

FOREMAN: *$2.25 per hour above highest paid Cement Mason on his crew*
GENERAL FOREMAN: *$1.50 per hour above highest paid Cement Mason Foreman on his crew*

Cement Mason Apprentice: *(Program changed June 1, 2016)*

	06/01/19	06/01/2020
60% *(0 - 1600 hours)*	$18.13	$18.78
70% *(1801 - 2700 hours)*	$21.15	$21.91
80% *(2701 - 3600 hours)*	$24.17	$25.04
90% *(3601 - 4500 hours)*	$27.19	$28.17

FRINGE BENEFITS:

	06/01/18	06/01/19	06/01/2020
Health & Welfare	$7.43 per hour worked, contribution	$7.53	$7.53
Pension	$6.04 per hour worked, contribution	$6.74	$7.34
Training	$0.60 per hour worked, contribution	$0.60	$0.60
Int. Training	$0.06	$0.06	$0.06

Deductions, upon written authorization of employee:

Credit Union $1.40 per hour worked, deduction from net wages

02/01/2021

Dues Check off **$2.02 *per hour worked*,** *deduction from net wages*

Note: Apprentice dues rates are calculated on the Apprentice percentage level of the journeyman dues rates:

90% = $1.82 per hour ***80% = $1.62 per hour,***
70% = $1.41 per hour ***60% = $1.21 per hour***

NW FCA $0.04 per hour worked, deduction

CEMENT MASONS
APPENDIX A

CLASSIFICATIONS:

GROUP I

- Rodding, tamping, floating, troweling, patching, stoning, rubbing, sack rubbing
- All exposed aggregate finishing and sealing. All architectural finishing, staining, stamping, and coloring, washing and power washing of concrete, polymer, latex and composite materials
- Setting of screeds, screed forms, curb & gutter & sidewalk forms
- Preparation of all concrete for caulking of the joints and the caulking of expansion joints
- Preparation of concrete for the application of hardeners, sealers and curing compounds and their application
- Grouting and dry packing of machine base
- Removal of snap ties and she bolts, and other form devises prior to patching of concrete

GROUP II

- Power Troweling Machine Operator
- Troweling of magnesite, torganal, or material with epoxy bases of oxychloride base
- All Power Grinders, Bushing Hammer, Chipping Gun
- Gunite Nozzleman
- All sandblasting for architectural finishes, patch preparation, and exposing of aggregate for finish
- Concrete Sawing and Cutting for control and expansion joints and scoring for decorative patterns
- Operating of Clary-type Floats, Longitudinal Floats, Rodding Machines and Belting Machines
- Scarifiers
- Working on scaffolds

GROUP III

- Grinding, bushing or chipping of toxic materials or high density concrete
- Operating of power tools on a scaffold

ELECTRICIANS
APPENDIX A

Revised Wage Rates and Fringes

WAGE RATES:		06/01/19	**06/01/2020**
Journeyman Wireman		$46.05	**$48.05**
Journeyman Wireman Cable Splicer	5% above Journeyman**	$48.35	**$50.45**
Journeyman Wireman Welder	10% above Journeyman*	$50.66	**$52.86**
Foreman	10% above Journeyman	$50.66	**$52.86**
Foreman *(Supervising 6 or more Journeymen or when 20 or more Journeyman are on a project all Foreman will be paid @ 15%)*	15% above Journeyman	$52.96	**$55.26**
General Foreman	30% above Journeyman	$59.87	**$62.47**

* *Journeyman Wireman when Welding - 10% above Journeyman Wireman rate when welding for a minimum of 2 hours.*
** *Journeyman Wireman Cable Splicer - Cable splicing and stress cones by whatever method on voltage over 2300 volts will be paid 5% above Journeyman Wireman rate for a minimum of 2 hours.*

APPRENTICE RATES
effective 06/01/2020

(Indentured after April 12, 2013)			**Wages**	**Health & Welfare**	**L.U. 112 Retirement**	**NEBF @ 3%**	**Appr. Training**
0 - 1600	1st Period	40%	**$19.22**	**$9.03**	$ -	**$0.58**	**$1.10**
1601-2500	2nd Period	45%	**$21.62**	**$10.05**	**$4.12**	**$0.65**	**$1.10**
2501-3500	3rd Period	50%	**$24.03**	**$10.08**	**$4.58**	**$0.72**	**$1.10**
3501-5000	4th Period	65%	**$31.23**	**$10.19**	**$5.95**	**$0.94**	**$1.10**
5001-6500	5th Period	80%	**$38.44**	**$10.29**	**$7.32**	**$1.15**	**$1.10**
6501-8000	6th Period	85%	**$40.84**	**$10.33**	**$7.78**	**$1.23**	**$1.10**

FRINGE BENEFITS:

	06/01/18	06/01/19	**06/01/2020**
Health & Welfare	$9.68 *per hour worked, contribution*	$9.93	**$10.43**
Pension-National *(NEBF gross wages)*	3%	3%	3%
Pension Plans	$8.65 *per hour worked, contribution*	$8.65	**$9.15**
Apprentice Training	$0.90 *per hour worked, contribution*	$1.10	$1.10

Deductions, upon written authorization of employee:

Vacation — *10% gross wages, optional, taxable deduction*

Working Dues Assessment — *4% of gross wages, deduction, not to include travel pay (applicable to all wiremen & apprentices 1600 hours and above)*

06/01/18

National Electrical 401(k) Plan — 5% *pre-tax (at option of employee, with written authorization)*

INSULATORS & ALLIED WORKERS
APPENDIX A

Revised Wage Rates and Fringes

ALLIED WORKERS

WAGE RATES:	08/01/18	08/01/19	01/01/2020	**08/01/2020**
Journeyman	$36.17	$37.27	$35.77	**$36.87**
Foreman	$39.79	$41.00	$39.35	**$40.56**
General Foreman	*Negotiated to be more than ten percent (10%+) above journeyman base rate*			

APPRENTICE:

(Receive the following percentage of the Journeyman's rate plus fringe benefits as indicated below:

Period	08/01/18 Wage	08/01/19 Wage	01/01/02020 Wage	**08/01/2020 Wage**
1st year	$21.50	$22.16	$20.16	**$20.82**
2nd year	$25.17	$25.94	$23.94	**$24.71**
3rd year	$28.84	$29.72	$27.72	**$28.60**
4th year	$32.50	$33.49	$31.49	**$32.48**

FRINGE BENEFITS:

	01/01/19		08/01/19	01/01/2020
Pension *(see table below)*	$10.05	per hour worked, contribution	$10.05	$11.62
Pension Apprentice* *(see table below)*	$9.55	per hour worked, contribution	$9.55	$11.62
Health & Welfare	$9.24	per hour worked, contribution	$9.24	$9.24
Occupational Health	$0.08	per hour worked, contribution	$0.08	$0.01
Apprentice Fund	$0.88	per hour worked, contribution	$0.88	$0.88
Safety Training	$0.02		$0.02	$0.02

Deductions, upon written authorization of employee:

Credit Union (Vacation) $2.25 per hour worked, optional deduction

	08/01/19
Dues Checkoff	Service Fee is 7.5% of "Taxable" wages, all employees

Classification Levels:** *(Pension consists of both Defined Benefit & IAP contribution level)* ***Effective 08/01/2020

Class	Apprentice 1st Yr	Apprentice 2nd Yr	Apprentice 3rd Yr	Apprentice 4th Yr	II 1-5 YRS	III 6-15 YRS	IV 16-19 YRS	V 20+ YRS
Wage	**$20.82**	**$24.71**	**$28.60**	**$32.48**	**$36.87**	**$36.87**	**$36.87**	**$36.87**
Defined Benefit	$5.62	$5.62	$5.62	$5.62	$5.62	$5.62	$5.62	$5.62
IAP	$6.00	$6.00	$6.00	$6.00	$6.00	$6.00	$6.00	$6.00

IRONWORKERS
APPENDIX A

Revised Wage Rates and Fringes

IRON WORKERS

WAGE RATES:	07/01/18	07/01/19	**07/01/2020**
JOURNEYMAN	$33.18	$33.59	**$34.59**
FOREMEN - *per hour over Journeyman rate*	$3.00	$3.00	$3.00
GENERAL FOREMAN - *per hour over Journeyman rate*	$4.00	$4.00	$4.00

Classifications: *Structural Iron Workers, Ornamental Iron Workers, Machinery Movers, Machine Erectors, Riggers, Signal Men, Welders & Burners, Fence Erectors, Sheeters, Reinforcing Iron Workers*

APPRENTICE (*Four Year Apprenticeship*):
(percentage of the Journeyman's rate plus fringe benefits)

1st 6 months -	65% *(no Pension or Annuity)*	5th 6 months -	90%
2nd 6 months -	70% *(no Pension or Annuity)*	6th 6 months -	90%
3rd 6 months -	75%	7th 6 months -	95%
4th 6 months -	80%	8th 6 months -	95%

APPRENTICE (*Four Year Apprenticeship Effective 03/01/2018*):
(All apprentices, regardless of their indenture date, & percentage of the Journeyman's rate plus fringe benefits)

1st 6 months -	60% *(no Pension or Annuity)*	5th 6 months -	80%
2nd 6 months -	65% *(no Pension or Annuity)*	6th 6 months -	85%
3rd 6 months -	70%	7th 6 months -	90%
4th 6 months -	75%	8th 6 months -	95%

FRINGE BENEFITS:

	07/01/18		07/01/19	**07/01/2020**
Annuity	$7.00	*per hour worked, contribution*	$7.50	$7.50
Health & Welfare	$8.17	*per hour worked, contribution*	$8.54	**$9.16**
Pension	$10.45	*per hour worked, contribution*	$11.00	$11.00
Apprentice Fund	$0.70	*per hour worked, contribution*	$0.72	**$0.74**
IMPACT Fund			$0.00	$0.00
Paid Time Off *(Fund is taxable)*			$1.50	**$1.70**

Deductions, upon written authorization of employee:

	07/01/19	**07/01/2020**
Vacation	$0.00 per hour worked, deduction from net wages	$0.00
Market Recovery Account	$1.00 per hour worked, deduction	$1.00

	07/01/19	**07/01/2020**
Dues Checkoff	$1.14 *per hour worked, deduction ($1.14 for Apprentices)*	**$1.17**

Note: Foreman and General Foreman rate based on Journeyman rate
Working Assessments increase in order to combine District Council Supplemental Dues with the Working Assessment as ratified by the members on October 20, 2017.
Working Assessments continue to be a wage deduction.

LABORERS
APPENDIX A

Revised Wage Rates and Fringes

WAGE RATES:	06/01/19	**06/01/2020**
Group I	$27.94	**$28.79**
Group II	$28.21	**$29.06**
Group III	$28.48	**$29.33**
Group IV	$28.76	**$29.61**

Group V Sand Hogs *(Under Compressed Air Conditions)*
(Computed by multiplying the increase x 8 hr. shift and add total to previous rate)

LBS.	HRS. WORK	OT DIV	06/01/18	06/01/19	06/01/19	
1-14	6	7-1/2	$228.64	$237.44	**$238.88**	
14-18	6	7-1/2	$233.57	$242.37	**$243.81**	
18-25	4	7-1/2	$233.85	$242.65	**$244.09**	Rates to be
18-22	6	10	$255.71	$264.51	**$265.95**	
22-26	4	7-1/2	$238.17	$246.97	**$248.41**	recalculated
26-32	4	7-1/2	$240.79	$249.59	**$251.03**	
32-38	3	7-1/2	$243.75	$252.55	**$253.99**	as needed
38-44	2	7-1/2	$244.16	$252.96	**$254.40**	
Outside Lock and Gauge Tender			$221.28	$230.08	**$231.52**	

GROUP VI:	Construction Specialist	$28.66	**$29.51**
GROUP VII:	Hod Carriers *(Per Mason Contractors Assn. 06/01/15)*	$27.95	**$29.35**
GROUP VIII:	Powdermen *(Previously misidentified as Group V)*	$30.13	**$30.98**
GROUP IX	Grade Checker	$30.47	**$31.32**

FOREMAN	$2.00 *above highest rate supervised*
GENERAL FOREMAN	$2.00 *above highest rate supervised*

Apprentices shall receive the following percentage of the Group I rate plus fringe benefits as indicated below:

Step	Hours	%	**Wage**	Step	Hours	%	**Wage**
I	0 to 1000 hours	60%	**$17.27**	IV	3001 to 4000 hours	85%	**$24.47**
II	1001 to 2000 hours	70%	**$20.15**	V	4001 to 5000 hours	90%	**$25.91**
III	2001 to 3000 hours	80%	**$23.03**	VI	5001 to 6000 hours	95%	**$27.35**

FRINGE BENEFITS:

	06/01/18	06/01/19	**06/01/2020**
Health & Welfare	$6.40 per hour worked, contribution	$6.50	**$6.70**
Pension	$5.25 per hour worked, contribution	$5.60	**$6.00**
Pension (Hod Carriers)	$5.25 per hour worked, contribution	$5.60	**$5.95**
Training	$0.70 per hour worked, contribution	$0.90	**$0.95**
Training (Hod Carriers)	$0.60 per hour worked, contribution	$0.80	**$0.85**
LECET*	$0.00 per hour worked, contribution	$0.00	$0.00

	06/01/19	**06/01/2020**
Deductions from net wages, upon written authorization of employee:		
Credit Union	$1.00 per hour, deduction from net wages	$1.00
Union Dues	$1.58 per hour worked, deduction	**$1.64**
Laborers' Political League	$0.03 per hour worked, optional deduction	$0.03

LABORERS CLASSIFICATIONS

Group I

Flagman*
Landscape Laborer
Scaleman
Traffic Control Supervisor
Asbestos Abatement Worker
Brick Pavers[2]
Brush Hog Feeder
Carpenter Tender
Cement Handler
Clean-up Laborer
Concrete Crewman[6]
Concrete Signal Man
Confined Space Attendant
Crusher Feeder
Demolition[7]
Dry Stack Walls[8]
Traffic Control Laborer[1]
Window Washer/Cleaner**
Pilot Car
Hazardous Waste Worker
Dumpman
Erosion Control Laborer
Fence Erector
Firewatch
Form Cleaning Machine Feeder, Stacker
General Laborer
Group Machine Header Tender
Guard Rail[3]
(Deleted)[4]
HDPE or similar liner installer
Lead Abatement Worker
Miner, Class "A"[5]
Mold Abatement Worker
Nipper
Riprap Man
Sandblast Tailhoseman
Scaffold Erector, Wood or Steel
Stake Jumper
Structural Mover[9]
Tailhoseman (water nozzle)
Timber Bucker & Faller (by hand)
Track Laborer (RR)
Truck Loader
Well-Point Man

***Detail clean-up, such as, but not limited to, cleaning floors, ceilings, walls, windows, etc., prior to final acceptance by the Owner.*

[1] *TO INCLUDE: But is not limited to, erection and maintenance of barricades, signs and relief of flag person.*
[2] *TO INCLUDE: the installation of brick or grass pavers for sidewalks, driveways, streets and parking lots.*
[3] *TO INCLUDE: Guard rails, guide and reference posts, signposts, and right-of-way markers.*
[4] *Footnote deleted*
[5] *TO INCLUDE: Bull Gang, Concrete Crewman, Dumpman and Pumpcrete Crewman, including distributing pipe, assembly & dismantle, and Nipper.*
[6] *TO INCLUDE: Stripping of forms, hand operating jacks on slip form construction, application of concrete curing compounds, pumpcrete machine. Signaling, handling the nozzle of squeeze crete or similar machine - 6 inches or smaller.*
[7] *TO INCLUDE: Clean-up, burning, loading, wrecking and salvage of all material.*
[8] *TO INCLUDE: Including all dray stack walls, including keystone walls and others using blocks and interlocking pegs.*
[9] *TO INCLUDE: Separating foundation, preparation, cribbing, shoring, jacking and unloading of structures*

NOTE: All other work classifications not specifically listed shall be classified as General Laborer Group I.

Group II

Asphalt roller, walking
Cement Finisher Tender
Concrete Saw, walking
Demolition Torch
Dope Pot Fireman, non-mechanical
Driller Helper (when required to move & position machine)
Form Setter, paving
Deleted[10]
Jackhammer Operator Miner, Class "B"[11]
Nozzleman, water, (to include fire hose) air, or steam
Pavement Breaker, under 90 lbs.
Pipe layer, corrugated metal and multi-plate
Pot Tender
Powderman Helper
Power Buggy Operator
Power Tool Operator, gas, electric, pneumatic
Railroad Equipment, power driven, except dual mobile power spiker or puller
Railroad Power Spiker or Puller, dual mobile
Rigger/Signal Person
Rodder & Spreader
Compaction Equipment[12]
Trencher, Shawnee
Tugger Operator
Wagon Drills
Water Pipe Liner
Wheelbarrow, power driven
Remote Equipment Operator[13]

[10] *Deleted*
[11] *TO INCLUDE: Brakeman, Finisher, Vibrator, Form Setter.*
[12] *TO INCLUDE: All hand operated power compaction equipment.*
[13] *i.e. Compaction and Demolition.*

Group III

Air and Hydraulic Track Drill
Asphalt Raker
Brush Machine[14]
Caisson Worker, free air
Chain Saw Operator & Faller
Concrete Stack[15]
Gunite[16]
Deleted[17]
High Scaler
Laser Beam Operator[18]
Miner, Class "C"[19]
Monitor Operator, air track or similar mounting
Mortar Mixer
Nozzleman[20]
Pavement Breaker, 90 lbs. & over
Pipelayer[21]
Pipewrapper
Plasterer Tenders
Trenchless Technology Technician
Vibrators, ALL

[14] *TO INCLUDE: Horizontal construction joint clean-up brush machine, power propelled.*
[15] *TO INCLUDE: Laborers when working on free standing concrete stacks for smoke or fume control above 40 feet high.*
[16] *TO INCLUDE: Operation of machine and nozzle.*
[17] *Deleted.*
[18] *TO INCLUDE: Elevation control.*
[19] *TO INCLUDE: Miner, Nozzelman for concrete. Laser Beam Operator and Rigger on tunnels.*
[20] *TO INCLUDE: Jet Blasting Nozzleman, over 1200 lbs., jet blash machine power-propelled, sandblast nozzle, Squeeze and Flo-crete nozzle.*
[21] *TO INCLUDE: Working topman, caulker, collarman, jointer, mortarman, rigger, jacker, shorer, valve or meter installer, temper. Including pressurized and non-pressurized ductile pipe, gravity pipe and HDPE (fused and non-fused).*

Group IV

Drills with dual masts
Deleted[22]
Miner, Class "D"[23]
Remote Equipment Operator
Welder, electric, manual or automatic[24]

[22] *Deleted*
[23] *TO INCLUDE: Raise and Shaft Miner, Laser Beam Operator on raises and shafts.*
[24] *TO INCLUDE: HDPE or similar pipe and liner.*

Group V

Sand Hogs under compressed air conditions
(Computed by multiplying the increase x 8 hr. shift and add total to previous rate)

Group VI

Construction Specialist[25]

[25] *TO INCLUDE: Work requiring special skills not addressed in the above classifications mutually agreed to between the Union and the Employer.*

Group VII

Hod Carrier[25]

[26] *Wages, Fringes and Promotional Fund as per Spokane Masonry Association Agreement.*

Group VIII

Powderman

Group IX

Grade Checker

OPERATORS
APPENDIX A

Revised Wage Rates and Fringes

WAGE RATES:	**07/01/19**	**06/01/2020**
Group I	$28.46	**$29.11**
Group II	$28.78	**$29.43**
Group III	$29.39	**$30.04**
Group IV	$29.71	**$30.36**
Group V	$29.99	**$30.64**
Group VI	$30.26	**$30.91**
Group VII	$31.36	**$32.01**
Group VIII	$32.70	**$33.35**
Group IX	$33.20	**$33.85**
Group X	$33.70	**$34.35**
Foreman	+$1.50 *per hour over the scale of the highest scale supervised*	
General Foreman	+$1.50 *per hour over the scale of the Foreman's scale*	

Note: All Crane Booms, including Tower Cranes:		09/03/07	07/01/19
Measure from center of rotation to center of shaft (radius):			
130' to 199'	*per hour over scale*	$0.50	$0.50
200' to 299'	*per hour over scale*	$0.80	$0.80
300' and over	*per hour over scale*		$1.00
		06/01/13	
Certified Crane Operators	*(per hour above their classification)*	$0.50	$0.50

Apprentices shall receive the following percentage of the **Group V** rate plus fringe benefits as indicated below:

07/01/19			
65%	0 - 1000 hours	80%	3001 - 4000 hours
70%	1001 - 2000 hours	90%	4001 - 5000 hours
75%	2001 - 3000 hours	95%	5001 - 8000 hours

**At no time will an apprentice wage exceed a journeyman's wage performing the same work.*

FRINGE BENEFITS:

	06/01/18	06/01/19	**06/01/2020**
Health & Welfare	$7.35 *per hour worked, contribution*	$7.70	**$8.05**
Pension	$7.95 *per hour worked, contribution*	$8.85	**$9.95**
Apprenticeship & Training	$0.65 *per hour worked, contribution*	$0.70	$0.70
National Training Fund			$0.05

Deductions, upon written authorization of employee:

	10/01/16	
Dues Checkoff	*(2%) gross wages*	
	02/21/05	07/01/19
Union Programs	$0.20 *per hour worked, deduction*	$0.22
WA State Building Trades *(eliminated)*	$0.01 *per hour worked, deduction*	$0.00
Scholarship Fund *(eliminated)*	$0.01 *per hour worked, deduction*	$0.00
Political Programs *(voluntary)*		$0.05

OPERATING ENGINEERS

CLASSIFICATIONS

GROUP I	GROUP II
Bit Grinders Bolt Threading Machine Compressors (under 2000 CFM, gas, diesel, or electric power) Crush Feeder (mechanical) Deck Hand Drillers Helper Fireman & Heater Tender Helper, Mechanic or Welder, H.D. Hydro-seeder, Mulcher, Nozzleman Oiler Oiler & Cable Tender, Mucking Machine Pumpman Rollers, all types on subgrade (farm type, Case, John Deere & similar, or Compacting Vibrator), except when pulled by Dozer with operable Blade Steam Cleaner Welding Machine	A-Frame Truck (single drum) Assistant Refrigeration Plant (under 1000 ton) Assistant Plant Operator, Fireman or Pugmixer (asphalt) Bagley or Stationary Scraper Belt Finishing Machine Blower Operator (cement) Cement Hog Compressor (2000 CFM or over, 2 or more, gas, diesel, or electric power) Concrete Saw (multiple cut) Distributor Leverman Ditch Witch or similar Elevator Hoisting Materials Dope Pots (power agitated) Fork Lift or Lumber Stacker, Hydra-lift, and similar Gin Trucks (pipeline) Hoist, single drum Loaders (bucket elevators and conveyors) Longitudinal Float Mixer (portable-concrete) Pavement Breaker, Hydra-Hammer and similar Power Broom Railroad Ballast Regulation Operator (self-propelled) Railroad Power Tamper Operator (self-propelled) Railroad Tamper Jack Operator (self-propelled) Spray Curing Machine (concrete) Spreader Box (self-propelled) Straddle Buggy (Ross and Similar on construction job only) Tractor (Farm type R/T with attachments, except Backhoe) Tugger Operator
GROUP III	**GROUP IV**
A-Frame Truck (2 or more drums) Assistant Refrigeration Plant and Chiller Operator (over 1000 ton) Backfillers (Cleveland and similar) Batch Plant & Wet Mix Operator, single unit (concrete) Belt-Crete Conveyors with power pack or similar Belt Loader (Kocal or similar) Bend Machine Bob Cat Boring Machine (earth) Boring Machine (rock under 8” bit) (Quarry Master, Joy, or similar) Bump Cutter (Wayne, Saginau, or similar)	Blade Operator (motor patrol and attachments) Concrete Pumps (squeeze-crete, flow-crete, pump-crete, Whitman and similar) Drilling Equipment (8” bit & over) (Robbins, reverse circulation, and similar) Drills (churn, core, calyx, or diamond) Equipment Serviceman, Greaser, and Oiler Grade Checker Hoe Ram Hoist (2 or more drums or Tower Hoist) Loaders (overhead and front-end, under 4 yds R/T) Paving (dual drum) Rubber Tire Railroad Track Liner Operator (self-propelled) Refrigeration Plant Engineers (under 1000 ton) Screed Operator

GROUP III *(continued)* Canal Lining Machine (concrete) Chipper (without crane) Cleaning and Doping Machine (pipeline) Deck Engineer Elevating Belt-type Loader (Euclid, Barber Green, and similar) Elevating Grader-type Loader (Dumor, Adams, or similar) Generator Plant Engineers (diesel, electric) Gunite Combination Mixer and Compressor Locomotive Engineer Mixermobile Posthole Auger or Punch Pump (grout or jet) Soil Stabilizer (P and H or similar) Spreader Machine Surface Heater & Planer Machine Tractor (to D-6 or equivalent) and Traxcavator Traverse Finish Machine Turnhead Operator	**GROUP IV** *(continued)* Signalman (Whirleys, Highline, Hammerheads, or similar) Skidders (R/T with or without attachments) Trenching Machines (under 7 ft. depth capacity) Vacuum Drill (reverse circulation drill under 8" bit)
GROUP V Automatic Subgrader (Ditches & Trimmers) (Autograde, ABC, R.A. Hansen, and similar on grade wire) Backhoe (under 1 yd) Batch Plant (over 4 units) Batch and Wet Mix Operator (multiple units, 2 and including 4) Boat Operator Cableway Controller (dispatcher) Concrete Pump Boom Truck (Less than 42M) Conveyor Aggregate Placement Equipment Crane (25 tons and under) Derricks and Stifflegs (under 65 tons) Drill Doctor Multiple Dozer Units with Single blade Paving Machine (asphalt and concrete) Piledriving Engineers Rollerman (finishing pavement) Trenching Machines (7 ft. depth and over)	**GROUP VI** Asphalt Plant Operator Backhoes (1yd. To 3 yds.) Blade (finish and bluetop) Automatic, CMI, ABC & similar when used as automatic GROUP VI Boom Cats (side) Cableway Operators Clamshell Operator (under 3 yds.) Concrete Slip Form Paver Concrete Pump Boom Truck (42M to less than 63M) Cranes (over 25 tons, including 45 tons) Crusher, Grizzle and Screening Plant Operator Draglines (under 3 yds.) Elevating Belt (Holland type) H.D. Mechanic H.D. Welder Heavy Equipment Robotics Operator Loader Operator (front-end and overhead, 4 yds, including 8 yds.) Mucking Machine Quad-track or similar equipment Rubber-tired Scrapers Shovels (under 3 yds.) Tractors (D-6 and equivalent and over) Vactor Guzzler, Super Sucker Concrete Cleaning/Decontamination Machine Master Environmental Maintenance Technician Ultra High Pressure Waterjet Cutting Tool System (30,000 psi) Vacuum Blasting Machine Operator

GROUP VII Backhoes (3 yds. and over) Concrete Pump Boom Truck (63M or greater) Cranes (ALL Cranes over 45 tons to 86 tons) Climbing, Rail and Tower Cranes up to and including 45 tons Clamshell Operator (3 yds. and over) Derricks and Stifflegs (65 tons and over) Draglines (3 yds and over) HD Welder/HD Mechanic Lead Water Well Driller Loader (360 degrees revolving Koehring Scooper or similar) Loaders (overhead and front-end, over 8 yds) Helicopter Pilot Shovels (3 yds. and over) Whirleys & Hammerheads, ALL	**Group VIII** **Cranes (86 to 99 tons)** Climbing, Rail and Tower Cranes over 45 tons
GROUP IX **Cranes (100 to 299 tons)**	**GROUP X** **Cranes (300 tons and over)**

PAINTERS/TAPERS
APPENDIX A

Revised Wage Rates and Fringes

Painters Rates:	07/01/18	03/01/19	07/01/19
Journeyman	$26.19	$26.29	$26.65
Foreman	$28.19	$28.29	$28.38

Glazers and Journeyman Painters include: Soft Floor Coverers, Spray Painters, Steel Painters, Steam Clean, Acid Etching, Sign Writers

Journeyman – *Rate reflects Local Collective Bargaining Agreement Group II rate*

07/01/19

Foreman - *"Receives a 6.5% an hour above Journeyman rate"*

General Foreman - *"Receives an 13% an hour above Journeyman rate"*

Drywall Finisher:	07/01/18	06/01/19	**07/01/2020**
Journeyman	$26.79	$28.04	**$28.59**
Foreman	$30.27	$31.69	**$32.31**

FOREMAN - *Receives an 13% an hour above Journeyman rate*

APPRENTICE RATES

Painters:

Period	*07/01/18* %JM	*07/01/18* Wages	Fringes	*03/01/19* Fringes	*07/01/19* Wages
1st	60%	$15.71	H&W (medical only)	H&W (only)	$15.99
2nd	65%	$17.02	H&W + 50% Pension	Full Benefits	$17.32
3rd	70%	$18.33	H&W + 50% Pension	Full Benefits	$18.66
4th	75%	$19.64	Full Benefits	Full Benefits	$19.99
5th	80%	$20.95	Full Benefits	Full Benefits	$21.32
6th	90%	$23.57	Full Benefits	Full Benefits	$23.99

Finishers:

Period	% JM	*07/01/18* Wages	*06/01/19* Wages	***07//01/2020* Wages**	Fringes
1st	60%	$16.07	$16.82	**$17.15**	H&W only
2nd	65%	$17.41	$18.23	**$18.58**	H&W + 50% Pension
3rd	70%	$18.75	$19.63	**$20.01**	H&W + 50% Pension
4th	75%	$20.09	$21.03	**$21.44**	H&W + 50% Pension
5th	85%	$22.77	$23.83	**$24.30**	Full Benefits
6th	90%	$24.11	$25.24	**$25.73**	Full Benefits

FRINGE PAYMENTS

Painters:	03/01/19	07/01/19	**07/01/2020**
Health & Welfare	$6.45	$6.75	**$6.85**
IUPAT Pension	$4.64	$5.15	**$5.67**
WW Pension	$0.50	$1.00	$1.00
Apprenticeship	$0.52	$0.52	$0.52

Finishers:	06/01/19	07/01/19	**07/01/2020**
Health and Welfare	$6.45	$6.75	**$6.85**
Pension	$6.92	$6.92	**$7.61**
WW Pension	$0.20	$0.20	**$0.70**
Apprenticeship	$0.43	$0.43	$0.43
Int'l Appr.	$0.10	$0.10	$0.10

01/01/2017

Deductions, upon written authorization of employee:

Painters - D.C. 5 Administrative Fee Check off: *3.73% of gross wages, deduction, not to include travel pay (computed on actual hours worked)*

07/01/2020

Finishers - D.C. 5 Administrative Fee Check off: ***3.8****% of gross wages, deduction, not to include travel pay (computed on actual hours worked)*

06/01/2020

Painters/Finishers - IUPAT Administrative Dues **$0.05** ***(per hour worked deduction)***

PIPEFITTERS
APPENDIX A

Revised Wage Rates and Fringes

WAGE RATES:	06/01/18	06/01/19	**06/01/2020**
Journeyman	$49.24*	$49.24*	**$50.93**
Foreman *(+10%/hour above Journeyman rate, incl. Savings Fund)*	$54.16	$54.16	**$56.02**
Foreman – on Jobs with More than 8 Pipefitters *(+15%/hour above Journeyman rate, incl. Savings Fund)*	$56.63	$56.63	**$58.57**
General Foreman – on Jobs with More than 8 Pipefitters *(+25%/hour above Journeyman rate, incl. Savings Fund)*	$61.55	$61.55	**$63.66**

Savings Fund Deduction – previously referred to as "Vacation" now called "Savings fund" is imputed income contributed to the Trust Fund on behalf of the employee $8.00

APPRENTICE RATES ***(effective 06/01/2020)*** *(Incoming Apprentice After 05/31/2013)*

Six Month Period	Percent %	**Wage Rate**	**Savings Fund*****	**Sick Leave**	**Health & Welfare**	National Pension	State Pension	Suppl Pension	**JATC**	ITF
1st	45%	**$22.92**	$3.60	**$0.57**	**$12.70**	$1.90	$2.70	$3.29	**$2.16**	$0.10
2nd	50%	**$25.47**	$4.00	**$0.64**	**$12.70**	$2.12	$3.00	$3.66	**$2.16**	$0.10
3rd	55%	**$28.01**	$4.40	**$0.70**	**$12.70**	$2.33	$3.30	$4.02	**$2.16**	$0.10
4th	60%	**$30.56**	$4.80	**$0.76**	**$12.70**	$2.54	$3.60	$4.39	**$2.16**	$0.10
5th	65%	**$33.10**	$5.20	**$0.83**	**$12.70**	$2.75	$3.90	$4.75	**$2.16**	$0.10
6th	70%	**$35.65**	$5.60	**$0.89**	**$12.70**	$2.96	$4.20	$5.12	**$2.16**	$0.10
7th	75%	**$38.20**	$6.00	**$0.95**	**$12.70**	$3.17	$4.50	$5.48	**$2.16**	$0.10
8th	80%	**$40.74**	$6.40	**$1.02**	**$12.70**	$3.38	$4.80	$5.85	**$2.16**	$0.10
9th	85%	**$43.29**	$6.80	**$1.08**	**$12.70**	$3.60	$5.10	$6.21	**$2.16**	$0.10
10th	85%	**$43.29**	$6.80	**$1.08**	**$12.70**	$3.60	$5.10	$6.21	**$2.16**	$0.10

******Apprentice Savings Fund Deduction – Apprentice Savings Fund is based on applicable period percentage of current Journeyman Savings Fund rate. This amount is included in the Basic Wage rate shown.***

FRINGE BENEFITS:

	06/01/18	06/01/19	**06/01/2020**
Health & Welfare	$12.40 per hour worked, contribution	$12.40	**$12.70**
National Pension	$4.23 per hour worked, contribution	$4.23	$4.23
State Pension	$5.02 per hour worked, contribution	$6.00	$6.00

Supplemental Pension	$6.33 per hour worked, contribution	$7.31	$7.31
JATC	$2.08 per hour worked, contribution	$2.13	**$2.16**
International Training Fund	$0.10 per hour worked, contribution	$0.10	$0.10

OTHER		06/01/19	**06/01/2020**
Paid Sick Leave	*JM wage rate; per hour worked, taxable contribution (Effective 06/01/2018 rate of pay based on classification level, i.e. JM, FM, GF)*	$1.23	**$1.27**

(TBD) 06/01/2020 - Sick Leave Proposal under review

Deductions, upon written authorization of employee:

Working Dues	3% of gross wages, deduction
Savings	$8.00 per hour, deduction

effective 06/05/17
IAP – Local 598 2.25% of gross wages, deduction

effective 06/01/13
PAC *(Political Action Committee)* (.7%) of gross wages, deduction

ROOFERS
APPENDIX A

Revised Wage Rates and Fringes

ROOFERS

WAGE RATES:	07/01/18	07/01/19	**07/01/2020**
Journeyman	$27.43	$28.25	**$28.85**
Foreman	$30.17	$31.08	**$31.74**

(Foreman 10% above journeyman)

APPRENTICE RATES:

(Registered apprentices indentured before July 1, 2010, stay at current apprentice rate until completed)

Pre-Apprentice	60%	4th 700 hours	85%
1st 700 hours	70%	5th 700 hours	90%
2nd 700 hours	75%	6th 700 hours	95%
3rd 700 hours	80%		

Effective 07/01/16

(Registered apprentice wage scale shall be as follows, as stated in the Standards of Apprenticeship adopted by Inland Empire Roofers and Employers Apprenticeship Committee)

1st	0 - 700 hours	60%	4th	2100 - 2800 hours	85%
2nd	700 - 1400 hours	70%	5th	2800 - 3500 hours	90%
3rd	1400 - 2100 hours	80%	6th	3500 - 4200 hours	95%

FRINGE BENEFITS:

	07/01/18	07/01/19	**07/01/2020**
Health & Welfare	$9.40 per hour worked, contribution	$9.40	$9.40
National Pension	$3.05 per hour worked, contribution	$3.25	**$3.30**
JATC	$0.30 per hour worked, contribution	$0.30	$0.30
Joint Education Trust	$0.03 per hour worked, contribution	$0.06	$0.06

07/01/2020

Deductions, upon written authorization of employee:

Dues Checkoff **hourly checkoff to $0.77 per hour ($0.05) increase**

SHEET METAL
APPENDIX A

Revised Wage Rates and Fringes

WAGE RATES:	06/01/19	06/01/2020	**08/01/2020**
Journeyman	$39.00	$41.65	**$41.35**
Foreman (+10%)	$42.90	$45.82	**$45.49**
General Foreman (+20%)	$46.80	$49.98	**$49.62**

Apprentices shall receive the following percentage of the Journeyman's rate plus fringe benefits as indicated below:

APPRENTICE RATE
08/01/2020

Classification	Wage%	Nat'l Pen.	**H&W**	NW Pen.	NW Supp.	Ntl Tng	APPR	Vac*.	**Dues***	Scholarship*
1st Year - 1st Half	50%	$0.76	**$11.50**	-0-	-0-	$0.17	$1.70	-0-	**$0.83**	$0.01
1st Year - 2nd Half	55%	$0.84	**$11.50**	$1.01	$0.25	$0.17	$1.70	-0-	**$0.89**	$0.01
2nd Year	60%	$0.91	**$12.50**	$1.93	$0.28	$0.17	$1.70	$0.50	**$0.98**	$0.01
3rd Year	70%	$1.06	**$12.50**	$2.97	$0.35	$0.17	$1.70	$0.50	**$1.10**	$0.01
4th Year	75%	$1.22	**$12.50**	$3.91	$0.47	$0.17	$1.70	$0.50	**$1.15**	$0.01
5th Year	85%	$1.37	**$12.50**	$5.10	$0.54	$0.17	$1.70	$0.50	**$1.26**	$0.01

NOTE: No voluntary deductions to NW Supplemental Pension allowed until beginning of 6th 6 month period.
**Deductions for Apprentices*

FRINGE BENEFITS:

	06/01/19		06/01/20	**08/01/2020**
Health & Welfare*	$12.20	per hour worked, contribution	$12.20	**$12.50**
Northwest Pension	$6.42	per hour worked, contribution	$6.42	$6.42
National Pension	$1.52	per hour worked, contribution	$1.52	$1.52
NW Supp. Plan (1)*	$0.68	- Journeyman, per hour worked, contribution	$0.68	$0.68
	$0.73	- Foreman; per hour worked, contribution	$0.73	$0.73
	$0.80	- General Foreman per hour worked, contribution	$0.80	$0.80
Local Training Fund	$0.86	per hour worked, contribution	$0.86	$0.86
National Training Fund	$0.17	per hour worked, contribution	$0.17	$0.17

Deductions, upon written authorization of employee:

	06/01/19	06/01/20	**08/01/2020**
Vacation	$1.00 per hour worked, taxable deduction ($0.50 taxable deduction for Apprentices, no deduction for 1st year apprentice)	$1.00	$1.00
NW Dues Checkoff	$1.35 per hour worked, deduction for Journeymen	$1.41	**$1.40**
	$1.41 per hour worked, deduction for Foreman	$1.48	**$1.47**
	$1.47 per hour worked, deduction for General Foreman	$1.54	**$1.53**
Scholarship	per hour worked, deduction for Journeyman, $0.01 Foreman, General Foreman *(For Apprentices dues rates see chart)*	$0.01	$0.01
Supp. Pension Trust	Optional deduction – *Employee deduction may be added in $0.50 increments up to $7.00 with written authorization, employees over the age of 50 may deduct the same up to the maximum of $9.00.*		

SPRINKLER FITTERS
APPENDIX A

Revised Wage Rates and Fringes

SPRINKLER FITTERS:	04/01/18	01/01/20	04/01/20
Journeyman	$34.45	$34.55	$34.55

Foreman $2.75 per hour above the Journeyman's rate
General Foreman $5.00 per hour above the Journeyman's rate (per 22+ men on job)

APPRENTICE RATES:

04/01/18		**01/01/21**	
Classifications 1 and 2		Classifications 3 through 10	
$7.75	Health & Welfare	**$10.55**	Health & Welfare
$0.00	Pension	**$7.00**	Pension
$0.52	Education Fund	$0.52	Education Fund

FRINGE PAYMENTS:

	04/01/19	01/01/20	04/01/20	**01/01/21**
National Pension	$6.60	$6.80	$6.80	**$7.00**
Health and Welfare	$10.02	$10.23	$10.23	**$10.55**
Local Training Fund	$0.52	$0.52	$0.52	$0.52
Supplemental Pension	$6.99	$6.99	$8.24	$8.24

Deductions, upon written authorization of employee:

Dues Checkoff Classes 1 thru 4 2.5% of gross wages, deduction
Classes 5 thru 10 5% of gross wages, deduction

PAC Fund Voluntary payroll deduction – *$0.15 per hour deduction*

Extended Benefit Fund (E.B.F.) $0.25 per hour for all hrs. worked 01/01/20
UA Organizing Fund *(per hour for all hrs worked)* $0.10

01/01/20 – Apprentices

Apprentice Classification	1	2	3	4	5	6	7	8	9	10
Wage	$16.15	$17.93	$19.46	$21.25	$23.03	$24.81	$26.60	$28.38	$30.16	$31.94
SIS	$0.00	$0.00	$0.90	$0.90	$1.15	$1.15	$1.15	$1.15	$1.15	$1.15

TEAMSTERS
APPENDIX A

Revised Wage Rates and Fringes

TEAMSTERS

WAGE RATES:	01/01/19	07/01/19	06/01/2020
Group I	$26.05	$27.21	$28.16
Group II	$28.69	$29.85	$30.80
Group III	$28.80	$29.96	$30.91
Group IV	$29.13	$30.29	$31.24
Group V	$29.24	$30.40	$31.35
Group VI	$29.24	$30.60	$31.55
Group VII	$29.78	$30.94	$31.89
Group VIII	$30.10	$31.26	$32.21
Foreman	+$2.00 *per hour above highest scale supervised*		
General Foreman	+$2.50 *per hour above highest Foreman supervised*		

APPRENTICE RATES:

Receive the following percentage of Journeyman's rate plus 100% fringe benefits

0 - 1000 hours 70% 1001 - 2000 hours 80% 2001 - 3000 hours 90%

FRINGE BENEFITS:

	01/01/19	07/01/19	06/01/2020
Health & Security	$10.30 per hour worked, contribution	$10.30	$10.30
Pension	$6.29 per hour worked, contribution	$6.53	$6.76
Training	$0.40 per hour worked, contribution	$0.52	$0.65
PEER (80)*	$1.04 per hour worked, contribution	$1.08	$1.12

**Program for Enhanced Early Retirement (09/01/12 reflects a diversion of $0.25 from wage to pension by vote of the membership) Effective December hours for January 2019 contributions.*

08/01/2020

Deductions, upon written authorization of employee:

Dues Checkoff **$79.00** (*2.5 times straight time hourly rate, equals rounded monthly dues)*

NWFCA $0.10 per hour worked

Union Programs $0.40 per hour worked additional

06/01/07

D.R.I.V.E.(*Democrat, Republican, Independent Voter Education*) weekly voluntary contribution as designated by the employee ($2.00/week, $3.00/week, $5.00/week, or Other)

CLASSIFICATIONS

GROUP I Escort Driver or Pilot Car Helper or Swamper Pickup hauling employees or material	**GROUP II** Ambulance Driver (when in operation) Fish Truck Flat Bed Truck, single rear axle Fork Lift, 3000 lbs. And under Leverperson, loading trucks at bunkers Seeder and Mulcher Shop Mechanic Stationary Fuel Operator Team Driver Tractor (small, rubber-tired, pulling trailer or similar equipment) Trailer Mounted Hydro Seeder and Mulcher Water Tank Truck, up to 1800 gallons
GROUP III Bus Driver or employee haul Flat Bed Truck, dual rear axle Power Boat hauling employees or material	**GROUP IV** Buggy Mobile and similar Bulk Cement Tanks and Spreader Power Operated Sweeper Straddle Carrier (Ross, Hyster, and similar) Water Tank Truck: 0-4000 gallons
GROUP V Auto Crane: 2000-lb. Capacity Dumptor: 6 yds. And under Flat Bed Truck with hydraulic system Fork Lift: 3001-16,000 lbs. Fuel Truck Driver, Steam Cleaner, and Washer Rubber-tired Tunnel Jumbo Scissors Truck Slurry Truck Driver Transit Mixers and Mixers hauling concrete: 3 yds. To and including 6 yds. Wrecker and Tow Truck	**GROUP VI** A-Frame Service Greaser Tire person Trucks, side, end, bottom, and articulated end dump: up to and including 12 yds Warehouseperson, to include shipping and receiving Water Tank Truck, 4001-8000 gallons
GROUP VII Dumps, semi-end Flaherty Spreader Box Driver Flowboys Fork Lift, 16,000 lbs. And over Lowboy, 50 tons and under Mechanic, Field Oil Distributor Driver (road, bootperson, leverperson, helper) and Oil Tank Driver Self-loading Roll Off and Dumpster over 6 yds. Semi-truck and Trailer, 50 tons and under Lowboy Stringer Truck (cable operated trailer) Tractor with Steer Trailer (both Operators to receive same rate and not to conflict with DWs and similar classification Group VI pulling trailer) Transfer Truck and Trailer Transit Mixers and Trucks Hauling Concrete: over 6 yds. to and including 20 yds. Truck and Pup Trucks, side, end, bottom, and articulated end dump: over 12 yds. to and including 100 yds. Truck-mounted Crane (with load-bearing surface, either mounted or pulled) up to 14 tons Turnarocker, DW's and similar, with 2 or more 4 wheel-power tractor w/trailer, gallonage or yardage scale, whichever is greater Vacuum Truck (super sucker, guzzler, etc.) Water Tank Truck, 8001-14000 gallon	**GROUP VIII** Helicopter Pilot, hauling employees or materials Lowboy, over 50 tons Prime Movers and Stinger Truck Transit Mixers and Trucks hauling concrete, over 20 yds Trucks, side, end, bottom, and articulated end dump, over 100 yds.