Invitation For Bid No. 242558
Table of Contents

Invitation For Bid
Instructions to Bidders
Representations and Certifications

Part I – The Schedule

Section A. Solicitation, Offer and Award
Section B. Supplies or Services
Section C. Description of the Work
Section D. Packaging and Marking
Section E. Inspection and Acceptance
Section F. Period of Performance
Section G. Contract Administration
Section H. Special Provisions

Part II – Contract Clauses

Section I. Battelle General Provisions - Fixed Price Construction Contracts (April 2013)

Environmental Safety and Health – 3113b

Part III – Attachments Section J

Attached Documents:

1. Division 1
2. Project Drawings
3. Project Job Planning Package
4. Project Workplace Exposure Assessment
5. Admin – 64
6. Haskris Document Package
7. Powervar Document Package

Forms online at: http://www.pnl.gov/contracts/documents/construction.asp

1. Acceptance of Completed Work
2. Bid Bond – SF 24
3. Certificate of Liability Insurance – ACORD 25
4. Construction Badge Invitation
5. Contract Daily Report
6. Contract Release
7. Injury/Illness Report
8. Invoice Template
9. OSHA Record Keeping
10. Payment Bond – SF 25a
11. Performance Bond – SF 25
12. Invitation for Information
13. Statement and Acknowledgement - SF1413

Pacific Northwest
NATIONAL LABORATORY

INVITATION FOR BID

IFB No. 242558

For: 3410 Lab 1401 Modifications

Battelle Memorial Institute (Battelle) in connection with Battelle's Operation and Maintenance of the U.S. Department of Energy's Pacific Northwest National Laboratory (PNNL) at Richland, Washington under contract no. DE-AC05-76RL01830 is pleased to invite offers for construction of **3410 Lab 1401 Modifications** located in **3410 BLDG, Richland WA.**

IFB No.:	**242558**				
Title:	**3410 Lab 1401 Modifications**				
Location:	3410 BLDG; 622 Horn Rapids Rd., Richland, WA. 99352				
Issue Date:	**05/22/2013**				
Closing Date:	**06/11/2013; 1 p.m. PST, BSF Room 2011 (Mendel)**				
NAICS Code:	**236220**				
Restriction:	Total Small Business Set-Aside				
Contract Type	FIRM FIXED PRICE				
Basis of Award:	Lowest Responsive Bid from a Responsible Proposer that is a Small Business				
Price Range:	**Between $100,000 and $250,000**				
Period of Performance:	**Date of Substantial Completion shall be no more than seventy (70) calendar days from Notice of Award (NOA). The date of Final Completion shall be seven (7) calendar days after the date of Substantial Completion.**				
Site Tour:	A **MANDATORY** pre-bid meeting and site tour will be conducted beginning at **11:00 a.m.,** in **3410 Bldg. Room 1205** on **05/30/2013** for all interested parties. The session will include introductions of the Project Team with an overview of the project and the proposing requirements. Please contact **Garrett Hyatt** on **371-7591** or by email at **garrett.hyatt@pnnl.gov** to arrange for badging if you are not currently badged.				
Contract Specialist:	**Garrett Hyatt**	**Phone:**	**371-7591**	**Email:**	**garrett.hyatt@pnnl.gov**

1. SYNOPSIS

A. Battelle's Pacific Northwest Division manages, operates, and maintains the Pacific Northwest National Laboratory (PNNL) on behalf of the U.S. Department of Energy's (DOE) Office of Science (SC) in Richland, Washington. The PNNL is a multi-program laboratory providing world-class scientific research capabilities and advanced scientific knowledge to support DOE's and the nation's strategic goals in science, national security, energy, and the environment. To meet the laboratory's needs and mission objectives, provide all necessary labor, materials equipment, supervision and subcontracts to Battelle for the modification of laboratory 1401 at Building 3410. The work generally includes architectural wall, ceiling, casework modifications; rework of the existing RF shielding and support structure; HVAC supply and return ductwork modifications with hydronic piping and coil changes, fire sprinkler piping and alarm/detection changes; and electrical power and lighting modifications.

B. Bid Alternate Number 1: FMCS graphics, sequence programming, and tuning per Sheet Note 8 on Drawing H-3-317137 Sh. 4 of 4.

2. PREQUALIFICATION – As a Condition to Bid

Bids will be accepted from pre-qualified contractors **ONLY**. Description of the pre-qualification process and a posting of all required submittal items can be found on-line at https://ebs.pnl.gov/default.aspx

3. BID GUARANTEE

A bid guarantee **IS** required with submission of Bid. The amount of the bid guarantee shall be 20% percent of the bid price or $3,000,000, whichever is less.

4. INQUIRIES

All inquiries shall be submitted in writing by email, mail or fax and shall be addressed to:

Battelle
c/o Garrett V. Hyatt, PO Box 999, Mail Stop **J2-05**
Phone **371-7591**
Fax **371-7670**
Email: **garrett.hyatt@pnnl.gov**

- **Inquiries must be received by COB 06/06/2013. Inquiries received after that date may not be responded to.**

5. SUBMISSION OF BIDS

5.1. Bids shall be received on or before the due date at the following Battelle address:

Battelle Memorial Institute
Attention: **Garrett V. Hyatt**
902 Battelle Blvd., Mail Stop **J2-05**
Richland WA 99352

5.2. Bids and bid modifications shall be submitted in sealed envelopes or packages. Telegraphic, Facsimile, and Electronic bids will not be accepted.

5.3. Bids shall contain the following completed documents:

- Completed Solicitation, Offer & Award Form
- Bid Guarantee
- Completed Representations & Certifications
- Completed Certificate of Liability Insurance
- Copy of your Washington State Contractors License
- Davis-Bacon Job; reporting is Required

5.4. Failure to submit **all** of the above required documents with your bid shall cause your bid to be determined non-responsive.

Regards,

Garrett V. Hyatt

Contract Specialist

Table of Contents

1. NAICS Classification 1
2. Commencement, Prosecution, and Completion of Work [Adapted from FAR 52.211-10 (Apr 1984)] 1
3. Bid Guarantee [Adapted from FAR 52.228-1 (Sept 1996)] 2
4. Contractor Prequalification — Construction 2
5. Amendments to Invitations for Bids [Adapted from FAR 52.214-3 (Dec 1989)] 2
6. False Statements in Bids [Adapted from 52.214-4 (Apr 1984)] 3
7. Submission of Bids [Adapted from FAR 52.214-5 (Mar 1997)] 3
8. Explanation to Prospective Bidders [Adapted from FAR 52.214-6 (Apr 1984)] 3
9. Late Submissions, Modifications, and Withdrawals of Bids [Adapted from FAR 52.214-7 (Nov 1999)] 4
10. Period for Acceptance of Bids [Adapted from FAR 52.214-15 (Apr 1984)] 4
11. Preparation of Bids—Construction [Adapted from FAR 52.214-18 (Apr 1984)] 4
12. Contract Award—Sealed Proposing—Construction [Adapted from FAR 52.214-19 (Aug 1996)] 5
13. Pricing Conditions [Adapted from FAR 52.214-34 & 35 (Apr 1991)] 6
14. Site Investigation and Conditions Affecting the Work [Adapted from FAR 52.236-3 (Apr 1984)] 6
15. Flow-down of Contract Clauses 6
16. PNNL Contractor Environmental Safety and Health (CESH) Documents 7

1. NAICS Classification

NAICS is the abbreviation for "North American Industry Classification System". NAICS was developed by the U.S., Canada, and Mexico in a joint effort to provide new comparability in statistics about business activity across North America. NAICS assigns codes to all economic activity within twenty broad sectors and is accepted and used by the Small Business Association (SBA) in determining size standards where eligibility as a small business is a factor or a consideration. The NAICS Classification for this work is:

NAICS: 236220

2. Commencement, Prosecution, and Completion of Work [Adapted from FAR 52.211-10 (Apr 1984)]

The Contractor shall be required to (a) commence work under this contract within **3 calendar days** after the date the Contractor receives the Notice to Proceed, (b) prosecute the work

diligently, and (c) complete the entire work ready for use not later than **70 calendar days from the Date Of Award.**

It is anticipated that the successful offeror will receive the **Award on or around 06/17/2013**.

3. Bid Guarantee [Adapted from FAR 52.228-1 (Sept 1996)]

(a) Failure to furnish a bid guarantee in the proper form and amount, by the time set for opening of bids, may be cause for rejection of the bid.

(b) The bidder shall furnish a bid guarantee in the form of a firm commitment, *e.g.,* bid bond supported by good and sufficient surety or sureties acceptable to Battelle, postal money order, certified check, cashier's check, or irrevocable letter of credit. Battelle will return bid guarantees, other than bid bonds—

(1) To unsuccessful bidders as soon as practicable after the opening of bids; and

(2) To the successful bidder upon execution of contractual documents and bonds (including any necessary coinsurance or reinsurance agreements), as required by the bid as accepted.

(c) The amount of the bid guarantee shall be **20% percent of the bid price or $3,000,000**, whichever is less.

(d) If the successful bidder, upon acceptance of its bid by Battelle within the period specified for acceptance, fails to execute all contractual documents or furnish executed bond(s) within 10 days after receipt of the forms by the bidder, Battelle may terminate the contract for default.

(e) In the event the contract is terminated for default, the bidder is liable for any cost of acquiring the work that exceeds the amount of its bid, and the bid guarantee is available to offset the difference.

4. Contractor Prequalification — Construction

(a) Contractors must meet Battelle's minimum qualification requirements to be eligible to contract with Battelle directly as a Prime Contractor, or participate as a Subcontractor to a Prime Contractor performing work on-site. Battelle's Prime Contractor and Subcontractor qualification requirements are posted on our Acquisition website at https://ebs.pnl.gov/advertised_rfq.aspx. Any required supporting documents should be attached electronically and submitted with the completed Qualification Statements. Contractors will be notified by email of the acceptability of their qualifications.

(b) Bids will be solicited and accepted from pre-qualified sources ONLY.

(c) Prior to performing any awarded contract work on-site, each Sub-contractor to the Prime Contractor must be accepted as meeting Battelle's qualification requirements.

5. Amendments to Invitations for Bids [Adapted from FAR 52.214-3 (Dec 1989)]

(a) If this solicitation is amended, then all terms and conditions which are not modified remain unchanged.

(b) Bidders shall acknowledge receipt of any amendment to this solicitation (1) by signing and returning the amendment, (2) by identifying the amendment number and date in the space provided for this purpose on the form for submitting a bid, (3) by letter or telegram, or (4) by facsimile, if facsimile bids are authorized in the solicitation. Battelle must receive the acknowledgment by the time and at the place specified for receipt of bids.

6. False Statements in Bids [Adapted from 52.214-4 (Apr 1984)]

Bidders must provide full, accurate, and complete information as required by this solicitation and its attachments. The penalty for making false statements in bids is prescribed in 18 U.S.C. 1001.

7. Submission of Bids [Adapted from FAR 52.214-5 (Mar 1997)]

(a) Bids and bid modifications shall be submitted in sealed envelopes or packages (unless submitted by electronic means)—

(1) Addressed to the office specified in the solicitation; and

(2) Showing the time and date specified for receipt, the solicitation number, and the name and address of the bidder.

(b) Bidders using commercial carrier services shall ensure that the bid is addressed and marked on the outermost envelope or wrapper as prescribed in paragraphs (a)(1) and (2) of this provision when delivered to the office specified in the solicitation.

(c) Telegraphic bids will not be considered unless authorized by the solicitation; however, bids may be modified or withdrawn by written or telegraphic notice.

(d) Facsimile bids, modifications, or withdrawals, will not be considered unless authorized by the solicitation.

(e) Bids submitted by electronic commerce shall be considered only if the electronic commerce method was specifically stipulated or permitted by the solicitation.

8. Explanation to Prospective Bidders [Adapted from FAR 52.214-6 (Apr 1984)]

Any prospective bidder desiring an explanation or interpretation of the solicitation, drawings, specifications, etc., must invitation it in writing soon enough to allow a reply to reach all prospective bidders before the submission of their bids. Oral explanations or instructions given before the award of a contract will not be binding. Any information given a prospective bidder concerning a solicitation will be furnished promptly to all other prospective bidders as an amendment to the solicitation, if that information is necessary in submitting bids or if the lack of it would be prejudicial to other prospective bidders.

9. Late Submissions, Modifications, and Withdrawals of Bids [Adapted from FAR 52.214-7 (Nov 1999)]

(a) Bidders are responsible for submitting bids, and any modifications or withdrawals, so as to reach the Battelle office designated in the invitation for bids (IFB) by the time specified in the IFB. If no time is specified in the IFB, the time for receipt is 10:00 a.m., local time, for the designated Battelle office on the date that bids are due.

(b)(1) Any bid, modification, or withdrawal received at the Battelle office designated in the IFB after the exact time specified for receipt of bids is "late" and will not be considered unless it is received before award is made, the Contract Specialist determines that accepting the late bid would not unduly delay the acquisition; and—

(i) If it was transmitted through an electronic commerce method authorized by the IFB, it was received at the initial point of entry to the Battelle infrastructure not later than 5:00 p.m. one working day prior to the date specified for receipt of bids; or

(ii) There is acceptable evidence to establish that it was received at the Battelle installation designated for receipt of bids and was under Battelle's control prior to the time set for receipt of bids.

(2) However, a late modification of an otherwise successful bid that makes its terms more favorable to Battelle will be considered at any time it is received and may be accepted.

(c) Acceptable evidence to establish the time of receipt at the Battelle installation includes the time/date stamp of that installation on the bid wrapper, other documentary evidence of receipt maintained by the installation, or oral testimony or statements of Battelle personnel.

(d) If an emergency or unanticipated event interrupts normal Battelle processes so that bids cannot be received at the Battelle office designated for receipt of bids by the exact time specified in the IFB and urgent Battelle requirements preclude amendment of the IFB, the time specified for receipt of bids will be deemed to be extended to the same time of day specified in the solicitation on the first work day on which normal Battelle processes resume.

(e) Bids may be withdrawn by written notice received at any time before the exact time set for receipt of bids. If the IFB authorizes facsimile bids, bids may be withdrawn via facsimile received at any time before the exact time set for receipt of bids, subject to the conditions specified in the Instruction to Bidders entitled "Facsimile Bids". A bid may be withdrawn in person by a bidder or its authorized representative if, before the exact time set for receipt of bids, the identity of the person invitationing withdrawal is established and the person signs a receipt for the bid.

10. Period for Acceptance of Bids [Adapted from FAR 52.214-15 (Apr 1984)]

In compliance with the solicitation, the bidder agrees, if this bid is accepted within **90 calendar days** from the date specified in the solicitation for receipt of bids, to furnish any or all items upon which prices are bid at the price set opposite each item, delivered at the designated point(s), within the time specified in the Schedule.

11. Preparation of Bids—Construction [Adapted from FAR 52.214-18 (Apr 1984)]

(a) Bids must be—

(1) Submitted on the forms furnished by Battelle or on copies of those forms, and

(2) Manually signed. The person signing a bid must initial each erasure or change appearing on any bid form.

(b) The bid form may require bidders to submit bid prices for one or more items on various bases, including—

(1) Lump sum proposing;

(2) Alternate prices;

(3) Units of construction; or

(4) Any combination of paragraphs (b)(1) through (b)(3) of this provision.

(c) If the solicitation requires proposing on all items, failure to do so will disqualify the bid. If proposing on all items is not required, bidders should insert the words "no bid" in the space provided for any item on which no price is submitted.

(d) Alternate bids will not be considered unless this solicitation authorizes their submission.

(e) Additional Bid Requirements—

(1) ***Bid Guarantee.*** If required.

(2) ***Representations and Certifications.*** Bidder shall complete and submit company representations and certifications.

(3) ***Insurance***. Bidder shall submit verification of possession of the insurance coverage listed in the General Provisions.

(4) ***Permits and Licenses***. Bidder shall submit the Certificate of License number, which grants them the authority to work as a contractor in the State, County and/or Municipality where the Work is to be performed. If Bidder does not have such license or certificate, a copy of the application for it must be submitted with an estimate of time required to obtain it.

(5) ***This is a Davis-Bacon Project, Davis-Bacon Reporting is Required.***

12. Contract Award—Sealed Proposing—Construction [Adapted from FAR 52.214-19 (Aug 1996)]

(a) Battelle will evaluate bids in response to this solicitation without discussions and will award a contract to the responsible bidder whose bid, conforming to the solicitation, will be most advantageous to Battelle, considering only price and the price-related factors specified elsewhere in the solicitation.

(b) Battelle may reject any or all bids, and waive informalities or minor irregularities in bids received.

(c) Battelle may accept any item or combination of items, unless doing so is precluded by a restrictive limitation in the solicitation or the bid.

(d) Battelle may reject a bid as non-responsive if the prices proposed are materially unbalanced between line items or sub-line items. A bid is materially unbalanced when it is based on prices significantly less than cost for some work and prices which are significantly overstated in relation to cost for other work, and if there is a reasonable doubt that the bid will result in the

lowest overall cost to Battelle even though it may be the low evaluated bid, or if it is so unbalanced as to be tantamount to allowing an advance payment.

13. Pricing Conditions [Adapted from FAR 52.214-34 & 35 (Apr 1991)]

(a) Offers submitted in response to this solicitation shall be in the English language. Offers received in other than English shall be rejected.

(b) Offers submitted in response to this solicitation shall be in terms of U.S. dollars. Offers received in other than U.S. dollars shall be rejected.

(c) All pricing must be firm for the duration of this Contract.

(d) The quoted price(s) must include all costs to for materials, labor, equipment, testing and any and all items of expense, fees, taxes, duties, overhead and profit for full and complete performance of the Work.

14. Site Investigation and Conditions Affecting the Work [Adapted from FAR 52.236-3 (Apr 1984)]

(a) The Contractor must take steps reasonably necessary to ascertain the nature and location of the work, and to investigate and satisfy itself as to the general and local conditions which can affect the work or its cost, including but not limited to—

(1) Conditions bearing upon transportation, disposal, handling, and storage of materials;

(2) The availability of labor, water, electric power, and roads;

(3) Uncertainties of weather, river stages, tides, or similar physical conditions at the site;

(4) The conformation and conditions of the ground; and

(5) The character of equipment and facilities needed preliminary to and during work performance.

The Contractor must also satisfy itself as to the character, quality, and quantity of surface and subsurface materials or obstacles to be encountered insofar as this information is reasonably ascertainable from an inspection of the site, including all exploratory work done by Battelle, as well as from the drawings and specifications made a part of this contract. Any failure of the Contractor to take the actions described and acknowledged in this paragraph will not relieve the Contractor from responsibility for estimating properly the difficulty and cost of successfully performing the work, or for proceeding to successfully perform the work without additional expense to Battelle.

(b) Battelle assumes no responsibility for any conclusions or interpretations made by the Contractor based on the information made available by Battelle. Nor does Battelle assume responsibility for any understanding reached or representation made concerning conditions which can affect the work by any of its officers or agents before the execution of this contract, unless that understanding or representation is expressly stated in this contract.

15. Flow-down of Contract Clauses

(a) Any Contract resulting from this solicitation, by and between Battelle and Contractor (including all subcontractors and suppliers), for services in connection with Battelle's Management, Operation and Maintenance of the U.S. Department of Energy's Pacific Northwest Laboratory (PNNL) at Richland, Washington, under Contract DE-AC05-76RLO1830 and Use Permit No. 1831 is subject to the terms and conditions of the General Provisions set forth in this solicitation. Contractor shall flow-down all terms and conditions in this solicitation in all its lower-tier subcontracts and supplier purchase orders. Clauses made inapplicable by the value, stated conditions, or type of contract are self-deleting.

(b) The Contractor and its subcontractors at any tier are required to submit a fully executed SF 1413, *Statement and Acknowledgment*, upon award of each subcontract involving labor to acknowledge that the following clauses of the contract have been included:

(1) Contract Work Hours and Safety Standards Act – Overtime Compensation – Construction
(2) Davis-Bacon Act
(3) Withholding of Funds
(4) Payrolls and Basic Records
(5) Apprentices and Trainees
(6) Compliance with Copeland Act Requirements
(7) Subcontracts (Labor Standards)
(8) Contract Termination – Debarment
(9) Disputes Concerning Labor Standards
(10) Certification of Eligibility

16. PNNL Contractor Environmental Safety and Health (CESH) Documents

CESH documents, including the CESH Manual, the Hoisting and Rigging Manual and miscellaneous CESH forms can be accessed online at http://www.pnl.gov/contracts/esh-procedures/.

Pacific Northwest
NATIONAL LABORATORY
Proudly Operated by **Battelle** *Since 1965*

REPRESENTATIONS AND CERTIFICATIONS

For the Pacific Northwest National Laboratory
Operated by Battelle Memorial Institute

Battelle Memorial Institute has executed and is engaged in the performance of Prime Contract DE-AC05-76RL01830 with the United States Department of Energy (DOE), for the management, operation, and maintenance of the Pacific Northwest National Laboratory (PNNL) in Richland, Washington. The following representations and certifications must be completed, and this form must be signed and returned with the Offeror's proposal.

Name and DUNS Number

Individual/Company Name _____

"Doing Business As" (DBA) _____

DUNS Number _____

Taxpayer Identification *(cl. 405 - Oct 1998)*

A. Definitions

"*Common Parent*," as used in this solicitation provision, means that corporation entity owns or controls an affiliated group of corporation that files its Federal income tax returns on a consolidated basis, and of which the offeror is a member.

"*Taxpayer Identification Number (TIN),*" as used in this provision, means the number required by the Internal Revenue Service (IRS) to be used by the offeror in reporting income tax and other returns. The TIN may be either a Social Security Number or an Employee Identification Number.

B. All offerors must submit the information required in Paragraphs D through F of this provision to comply with debt collection requirements of 31 U.S.C. 7701(c) and 3325(d), reporting requirements of 26 U.S.C. 6041, 6041A, and 6050M and implementing regulations issued by the IRS. If the resulting contract is subject to the reporting requirements described in Federal Acquisition Regulation (FAR) 4.904, the failure or refusal by the offeror to furnish the information may result in a 31 percent reduction of payments otherwise due under the contract.

C. The TIN may be used by the Government to collect and report on any delinquent amounts arising out of the offeror's relationship with the government (31 U.S.C. 7701(c)(3)). If the resulting contract is subject to the payment reporting requirements described in FAR 4.904, the TIN provided hereunder may be matched with IRS records to verify the accuracy of the offeror's TIN.

D. *Taxpayer Identification Number (TIN)*

- ☐ TIN: _____
- ☐ TIN has been applied for.
- ☐ TIN is not required because _____
- ☐ Offeror is a nonresident alien, foreign corporation, or foreign partnership that does not have income effectively connected with the conduct of trade or business in the United States and does not have an office or place of business or a fiscal paying agent in the United States.
- ☐ Offeror is an agency or instrumentality of a foreign government
- ☐ Offeror is an agency or instrumentality of a Federal Government
- ☐ Other. State basis: _____

E. *Type of Organization*

- ☐ Sole proprietorship
- ☐ Partnership
- ☐ Corporate entity (not tax-exempt)
- ☐ Corporate entity (tax-exempt)
- ☐ Government entity (Federal, State, or local)
- ☐ Foreign government
- ☐ International organization per 26 CFR 1.6049-4
- ☐ Other _____

F. *Common Parent*

- ☐ Offeror is not owned or controlled by a common parent as defined in paragraph (a) of this provision.
- ☐ Name and TIN of common parent: Name _____ TIN _____

☐ Offeror, its parent company, or subsidiaries, is/has been owned or controlled by a foreign entity. If so, provide the following information:

Name of Parent Company _____

Main Office Address _____

_____

G. *Other*

☐ Foreign organization is headquarter in _____ (country)

☐ Company ☐ is, ☐ is not publicly traded

Small Business Program Representations *(cl. 407 - Oct 2011)*

(Applicable if any performance will be inside the United States or its outlying areas.)

A. 1. The North American Industry Classification System (NAICS) code for this acquisition is _____.

2. The small business size standard is _____. (If a manufacturing NAICS code is used, a wholesale trade or retail trade business concern submitting an offer or quote is categorized as a "non-manufacturer" and deemed small if it has 500 or fewer employees and meets the requirements of 13 CFR 121.406)

3. The small business size standard for a concern which submits an offer in its own name, other than on a construction or service contract, but which proposes to furnish a product which it did not itself manufacture, is 500 employees.

B. *Representations*.

1. The offeror represents as part of its offer that it ☐ is, ☐ is not a small business concern.
(Complete 2-8 below, as applicable, only if the offeror represented itself as a small business concern in paragraph B.1. of this provision.)

2. The offeror represents, for general statistical purposes, that it ☐ is, ☐ is not, a small disadvantaged business concern as defined in 13 CFR 124.1002. *(If so, also complete the Small Disadvantaged Business Status representation, below.)*

3. The offeror represents as part of its offer that it ☐ is, ☐ is not a women-owned small business concern.

4. [*Complete only if the offeror represented itself as a women-owned small business concern in Paragraph B.3. of this provision.*] Women-owned small business (WOSB) concern eligible under the WOSB Program.
The offeror represents as part of its offer that—

a. It ☐ is, ☐ is not a WOSB concern eligible under the WOSB Program, has provided all the required documents to the WOSB Repository, and no change in circumstances or adverse decisions have been issued that affects its eligibility; and

b. It ☐ is, ☐ is not a joint venture that complies with the requirements of 13 CFR part 127, and the representation in Paragraph B.4.a. of this provision is accurate in reference to the WOSB concern or concerns that are participating in the joint venture. [*The offeror shall enter the name or names of the WOSB concern or concerns that are participating in the joint venture:*_____. *Each WOSB concern participating in the joint venture shall submit a separate signed copy of the WOSB representation.*]

5. [*Complete only if the offeror represented itself as a women-owned small business concern eligible under the WOSB Program in Paragraph B.4. of this provision.*] Economically disadvantaged women-owned small business (EDWOSB) concern. The offeror represents as part of its offer that—

a. It ☐ is, ☐ is not an EDWOSB concern eligible under the WOSB Program, has provided all the required documents to the WOSB Repository, and no change in circumstances or adverse decisions have been issued that affects its eligibility; and

b. It ☐ is, ☐ is not a joint venture that complies with the requirements of 13 CFR part 127, and the representation in Paragraph B.5.a. of this provision is accurate in reference to the EDWOSB concern or concerns that are participating in the joint venture. [*The offeror shall enter the name or names of the EDWOSB concern or concerns that are participating in the joint venture:*_____. *Each EDWOSB concern participating in the joint venture shall submit a separate signed copy of the EDWOSB representation.*]

6. The offeror represents as part of its offer that it ☐ is, ☐ is not a veteran-owned small business concern.

7. The offeror represents as part of its offer that it ☐ is, ☐ is not a service-disabled veteran-owned small business concern.

8. The offeror represents, as part of its offer, that—

a. It ☐ is, ☐ is not a HUBZone small business concern listed, on the date of this representation, on the List of Qualified HUBZone Small Business Concerns maintained by the Small Business Administration, and no material change in ownership and control, principal office, or HUBZone employee percentage have occurred since it was in accordance with 13 CFR part 126; and

b. It ☐ is, ☐ is not a HUBZone joint venture that complies with the requirements of 13 CFR part 126, and the representation in paragraph B.6.a. of this provision is accurate for the HUBZone small business concern that are participating in the HUBZone joint venture.
[*The offeror shall enter the name or names of the HUBZone small business concern or concerns that are participating in the joint venture:* _____. *Each HUBZone small business concern participating in the joint venture shall submit a separate signed copy of the HUBZone representation.*]

C. *Definitions*. As used in this provision ...
"Economically disadvantaged women-owned small business (EDWOSB) concern" means a small business concern that is at least 51 percent directly and unconditionally owned by, and the management and daily business operations of which are controlled by, one or more women who are citizens of the United States and who are economically disadvantaged in accordance with 13 CFR part 127. It automatically qualifies as a women-owned small business concern eligible under the WOSB Program.
"Service-disabled veteran-owned small business concern"—
1. Means a small business concern (a) Not less than 51 percent of which is owned by one or more service-disabled veterans or, in the case of any publicly owned business, not less than 51 percent of the stock of which is owned by one or more service-disabled veterans; and (b) The management and daily business operations of which are controlled by one or more service-disabled veterans or, in the case of a service-disabled veteran with permanent and severe disability, the spouse or permanent caregiver of such veteran.
2. Service-disabled veteran means a veteran, as defined in 38 U.S.C. 101(2), with a disability that is service-connected, as defined in 38 U.S.C. 101(16).

"Small business concern" means a concern, including its affiliates, that is independently owned and operated, not dominant in the field of operation in which it is bidding on Government contracts, and qualified as a small business under the criteria in 13 CFR part 121 and the size standard in Paragraph A of this provision.
"Veteran-owned small business concern" means a small business concern—
1. Not less than 51 percent of which is owned by one or more veterans (as defined at 38 U.S.C. 101(2)) or, in the case of any publicly owned business, not less than 51 percent of the stock of which is owned by one or more veterans; and
2. The management and daily business operations of which are controlled by one or more veterans.

"Women-owned small business concern" means a small business concern—
1. That is at least 51 percent owned by one or more women; or, in the case of any publicly owned business, at least 51 percent of the stock of which is owned by one or more women; and
2. Whose management and daily business operations are controlled by one or more women.

D. *Notice*.
1. If this solicitation is for supplies and has been set aside, in whole or in part, for small business concerns, then the clause in this solicitation providing notice of the set-aside contains restrictions on the source of the end items to be furnished.
2. Under 15 U.S.C. 645(d), any person who misrepresents a firm's status as a small, HUBZone small, small disadvantaged, or women-owned small business concern in order to obtain a contract to be awarded under the preference programs established pursuant to section 8(a), 8(d), 9, or 15 of the Small Business Act or any other provision of Federal law that specifically references section 8(d) for a definition of program eligibility, shall— (i) Be punished by imposition of fine, imprisonment, or both; (ii) Be subject to administrative remedies, including suspension and debarment; and (iii) Be ineligible for participation in programs conducted under the authority of the Act.

Alaska Native Corporation or Indian Tribe Representation *(cl. 407A - Feb 2011)*
In accordance with FAR 52.219-9(d)(1)(i), subcontracts awarded to an Alaska Native Corporation (ANC) or Indian tribe may be counted towards subcontracting goals for small business and small disadvantaged business concerns regardless of the size or Small Business Administration certification of the ANC or Indian tribe. As defined by FAR 52.219-9(b), the offeror represents that it –

☐ is, ☐ is not an Alaska Native Corporation
☐ is, ☐ is not an Indian tribe

Organizational Conflicts of Interest Disclosure—Advisory and Assistance Services *(cl. 411 - June 1997)*
A. Organizational conflict of interest means that because of other activities or relationships with other persons, a person is unable or potentially unable to render impartial assistance or advice to the Government, or the person's objectivity in performing the contract work is or might be otherwise impaired, or a person has an unfair competitive advantage.
B. An offeror notified that it is the apparent successful offeror shall provide the statement described in Paragraph C of this provision. For purposes of this provision, "apparent successful offeror" means the proposer selected for final negotiations or, where individual contracts are negotiated with all firms in the competitive range, it means all such firms.

C. The statement must contain the following:

1. A statement of any past (within the past twelve months), present, or currently planned financial, contractual, organizational, or other interests relating to the performance of the statement of work. For contractual interests, such statement must include the name, address, telephone number of the client or client(s), a description of the services rendered to the previous client(s), and the name of a responsible officer or employee of the offeror who is knowledgeable about the services rendered to each client, if, in the 12 months preceding the date of the statement, services were rendered to the Government or any other client (including a foreign government or person) respecting the same subject matter of the instant solicitation, or directly relating to such subject matter. The agency and contract number under which the services were rendered must also be included, if applicable. For financial interests, the statement must include the nature and extent of the interest and any entity or entities involved in the financial relationship. For these and any other interests enough such information must be provided to allow a meaningful evaluation of the potential effect of the interest on the performance of the statement of work.
2. A statement that no actual or potential conflict of interest or unfair competitive advantage exists with respect to the advisory and assistance services to be provided in connection with the instant contract or that any actual or potential conflict of interest or unfair competitive advantage that does or may exist with respect to the contract in question has been communicated as part of the statement required by Paragraph B of this provision.

D. Failure of the offeror to provide the required statement may result in the offeror being determined ineligible for award. Misrepresentation or failure to report any fact may result in the assessment of penalties associated with false statements or such other provisions provided for by law or regulation.

Employment Eligibility Verification *(cl. 421 - Oct 2011)*

(Applicable to proposals exceeding $3,000)

Offeror represents that—

- ☐ E-Verify is not applicable based on paragraph (e) of FAR 52.222-54 Employment Eligibility Verification.
- ☐ is, ☐ is not currently enrolled in E-Verify.
- ☐ if not currently enrolled, it will enroll in E-Verify within 30 calendar days of subcontract award.
- ☐ it will include FAR 52.222-54 in applicable lower-tier subcontracts.

Affirmative Action Compliance *(cl. 409 - Apr 1984)*

The offeror represents that it –

- ☐ has developed and has on file,
- ☐ has not developed and does not have on file, at each establishment, affirmative action programs required by the rules and regulations of the Secretary of Labor (41 CFR 60-1 and 60-2); or
- ☐ has not previously had contracts subject to the written affirmative action programs requirement of the rules and regulations of the Secretary of Labor.

Compliance with Veterans' Employment Reporting Requirements *(cl. 420 - Sep 2010)*

By submission of its offer, the offeror represents that, if it is subject to the reporting requirements of 38 U.S.C. 4212(d) (*i.e.*, if it has any contract containing Federal Acquisition Regulation clause 52.222-37, Employment Reports on Veterans), it has submitted the most recent VETS-100A Report required by that clause.

Previous Contracts and Compliance Reports *(cl. 408 - Feb 1999)*

Offeror represents that it—

- ☐ has, ☐ has not participated in a previous contract or subcontract subject the Equal Opportunity clause of this solicitation;
- ☐ has, ☐ has not filed all required compliance reports; and

Representations indicating submission of required compliance reports, signed by proposed subcontractors, will be obtained before subcontract awards.

Representation of Limited Rights Data and Restricted Computer Software *(cl. 415 - Dec 2007)*

A. This solicitation sets forth the Government's known delivery requirements for data (as defined in the clause at FAR 52.227-14, Rights in Data—General). Any resulting contract may also provide the Government the option to order additional data under the Additional Data Requirements clause at FAR 52.227-16, if included in the contract. Any data delivered under the resulting contract will be subject to the Rights in Data—General clause at FAR 52.227-14 included in this contract. Under the latter clause, a Contractor may withhold from delivery data that qualify as limited rights data or restricted computer software, and deliver form, fit, and function data instead. The latter clause also may be used with its Alternates II and/or III to obtain delivery of limited rights data or restricted computer software, marked with limited rights or restricted rights notices, as appropriate. In addition, use of Alternate V with this latter clause provides the Government the right to inspect such data at the Contractor's facility.

B. By completing the remainder of this paragraph, the offeror represents that it has reviewed the requirements for the delivery of technical data or computer software and states [*offeror check appropriate block*]—

☐ None of the data proposed for fulfilling the data delivery requirements qualifies as limited rights data or restricted computer software; or

☐ Data proposed for fulfilling the data delivery requirements qualify as limited rights data or restricted computer software and are identified as follows:

_____

_____

C. Any identification of limited rights data or restricted computer software in the offeror's response is not determinative of the status of the data should a contract be awarded to the offeror.

Royalty Payment Certification *(cl. 414 - Jan 1986)*

In order that the U.S. Department of Energy may be informed regarding royalty payments to be made by a contractor in connection with any acquisition, construction, or operation where the amount of the royalty payment is reflected in the contract price, or is to be reimbursed by Battelle, check one of the following:

☐ The Contract price includes no amount representing the payment of royalty by the Offeror directly to others in connection with the performance of the contract.

☐ The Contract price includes an amount for royalty payment expected to be made in connection with the proposed award set forth below:

1. the amount of each payment,
2. the names of the licensor, and
3. either the patent numbers involved or such other information as will permit identification of the patents and patent applications and the basis on which royalties will be paid.

Buy American Act Certificate *(cl. 410 - Feb 2009)*

A. The offeror certifies that each end product, except those listed in Paragraph B of this provision, is a domestic end product and that for other than COTS items, the offeror has considered components of unknown origin to have been mined, produced, or manufactured outside the United States. The offeror shall list as foreign end products those end products manufactured in the United States that do not qualify as domestic end products, *i.e.*, an end product that is not a COTS item and does not meet the component test in Paragraph 2 of the definition of "domestic end product." The terms "commercially available off-the-shelf (COTS) item," "component," "domestic end product," "end product," "foreign end product," and "United States" are defined in the clause of this solicitation entitled "Buy American Act—Supplies."

B. Foreign End Products:

Line Item No.	Country of Origin

C. Offers will be evaluated in accordance with the policies and procedures of Part 25 of the Federal Acquisition Regulation.

Export Control *(cl. 422 – July 2012)*

(Required for all proposals of Equipment, Tools, Software or Technology)

The Offeror represents that the property has an Export Control requirement that is described in either of the following regulations:

A. An International Traffic in Arms Regulations (ITAR) United States Munitions List (USML) Category

Manufacturer Name _____
Model Number _____
Description _____
USML Category # _____

B. An Export Administrations Regulations (EAR) Export Control Classification Number (ECCN);

Manufacturer Name _____
Model Number _____
Description _____
ECCN # _____ (e.g. 1A001…NOT the Harmonizing Code)

Note: The offeror must immediately contact the PNNL Property Office and identify the ECCN for each item, prior to the delivery of equipment, tools, software, or technology. The PNNL Property Office can be contacted at pnnl.property@pnnl.gov or phone (509) 371-7522.

Technical Data Certification *(cl. 413 - Jan 1986)*

The offeror certifies that it has not delivered or is not obligated to deliver to Battelle or to the Government under any contract or subcontract the same or substantially the same technical data included in its offer, except as set forth below:

☐ None

☐ Contract No. (and Subcontract No., if applicable), Agency name and place of delivery

Certification Regarding Responsibility Matters *(cl. 419 - April 2010)*

A. The Offeror certifies, to the best of its knowledge and belief, that—

1. The Offeror and/or any of its Principals—

☐ are, ☐ are not presently debarred, suspended, proposed for debarment, or declared ineligible for the award of contracts by any Federal agency;

☐ have, ☐ have not within a three-year period preceding this offer, been convicted of or had a civil judgment rendered against them for: commission of fraud or a criminal offense in connection with obtaining, attempting to obtain, or performing a public (Federal, state, or local) contract or subcontract; violation of Federal or state antitrust statutes relating to the submission of offers; or commission of embezzlement, theft, forgery, bribery, falsification or destruction of records, making false statements, tax evasion, violating Federal criminal tax laws, or receiving stolen property;

☐ are, ☐ are not presently indicted for, or otherwise criminally or civilly charged by a governmental entity with, commission of any of the offenses enumerated in Paragraph A.1.a.ii. of this provision;

☐ have, ☐ have not within a three-year period preceding this offer, been notified of any delinquent Federal taxes in an amount that exceeds $3,000 for which the liability remains unsatisfied.

a. Federal taxes are considered delinquent if both of the following criteria apply:

i. *The tax liability is finally determined*. The liability is finally determined if it has been assessed. A liability is not finally determined if there is a pending administrative or judicial challenge. In the case of a judicial challenge to the liability, the liability is not finally determined until all judicial appeal rights have been exhausted.

ii. *The taxpayer is delinquent in making payment*. A taxpayer is delinquent if the taxpayer has failed to pay the tax liability when full payment was due and required. A taxpayer is not delinquent in cases where enforced collection action is precluded.

b. *Examples*.

- The taxpayer has received a statutory notice of deficiency, under I.R.C. § 6212, which entitles the taxpayer to seek Tax Court review of a proposed tax deficiency. This is not a delinquent tax because it is not a final tax liability. Should the taxpayer seek Tax Court review, this will not be a final tax liability until the taxpayer has exercised all judicial appeal rights.
- The IRS has filed a notice of Federal tax lien with respect to an assessed tax liability, and the taxpayer has been issued a notice under I.R.C. § 6320 entitling the taxpayer to request a hearing with the IRS Office of Appeals contesting the lien filing, and to further appeal to the Tax Court if the IRS determines to sustain the lien filing. In the course of the hearing, the taxpayer is entitled to contest the underlying tax liability because the taxpayer has had no prior opportunity to contest the liability. This is not a delinquent tax because it is not a final tax liability. Should the taxpayer seek tax court review, this will not be a final tax liability until the taxpayer has exercised all judicial appeal rights.
- The taxpayer has entered into an installment agreement pursuant to I.R.C. § 6159. The taxpayer is making timely payments and is in full compliance with the agreement terms. The taxpayer is not delinquent because the taxpayer is not currently required to make full payment.
- The taxpayer has filed for bankruptcy protection. The taxpayer is not delinquent because enforced collection action is stayed under 11 U.S.C. 362 (the Bankruptcy Code).

The Offeror ☐ has, ☐ has not within a three-year period preceding this offer, had one or more contracts terminated for default by any Federal agency.

2. "Principal," for the purposes of this certification, means an officer, director, owner, partner, or a person having primary management or supervisory responsibilities within a business entity (*e.g.*, general manager; plant manager; head of a subsidiary, division, or business segment; and similar positions).

3. This Certification Concerns a Matter Within the Jurisdiction of an Agency of the United States and the Making of a False, Fictitious, or Fraudulent Certification May Render the Maker Subject to Prosecution Under Section 1001, Title 18, United States Code.

B. The Offeror shall provide immediate written notice to the Battelle Contracts Representative if, at any time prior to contract award, the Offeror learns that its certification was erroneous when submitted or has become erroneous by reason of changed circumstances.

C. A certification that any of the items in Paragraph A of this provision exists will not necessarily result in withholding of an award under this solicitation. However, the certification will be considered in connection with a determination of the Offeror's responsibility. Failure of the Offeror to furnish a certification or provide such additional information as requested by the Battelle Contracts Representative may render the Offeror nonresponsible.

D. Nothing contained in the foregoing shall be construed to require establishment of a system of records in order to render, in good faith, the certification required by Paragraph A of this provision. The knowledge and information of an Offeror is not required to exceed that which is normally possessed by a prudent person in the ordinary course of business dealings.

E. The certification in Paragraph A of this provision is a material representation of fact upon which reliance was placed when making award. If it is later determined that the Offeror knowingly rendered an erroneous certification, in addition to other remedies available to Battelle, the Battelle Contracts Representative may terminate the contract resulting from this solicitation for default.

Patent Rights Representation *(cl. 417 - Jan 1986)*

Offeror represents that it—

☐ is, ☐ is not A small business as defined at section 2 of Pub. L. 85-536 (15 USC 632) and the implementing regulations of the Administrator of the Small Business Administration, 13 CFR Part 121.

☐ is, ☐ is not An organization of the type described in section 501(c)(3) of the Internal Revenue Code (26 USC 501(c)(3)) and exempt from taxation under section 501(a) of the Internal Revenue Code (26 USC 501(a)).

☐ is, ☐ is not is notA nonprofit scientific or educational organization qualified under a State nonprofit organization statute.

☐ is, ☐ is not A U.S. domestic university or other U.S. institution of higher education.

Certification and Disclosure Regarding Payments to Influence Certain Federal Transactions *(cl. 404 - Sep 2007)*

(Applicable to proposals exceeding $100,000)

A. *Definitions.* As used in this provision—"Lobbying contact" has the meaning provided at 2 U.S.C. 1602(8). The terms "agency," "influencing or attempting to influence," "officer or employee of an agency," "person," "reasonable compensation," and "regularly employed" are defined in the FAR clause of this solicitation entitled "Limitation on Payments to Influence Certain Federal Transactions" (52.203-12).

B. *Prohibition.* The prohibition and exceptions contained in the FAR clause of this solicitation entitled "Limitation on Payments to Influence Certain Federal Transactions" (52.203-12) are hereby incorporated by reference in this provision.

C. *Certification.* The offeror, by signing its offer, hereby certifies to the best of its knowledge and belief that no Federal appropriated funds have been paid or will be paid to any person for influencing or attempting to influence an officer or employee of any agency, a Member of Congress, an officer or employee of Congress, or an employee of a Member of Congress on its behalf in connection with the awarding of this contract.

D. *Disclosure.* If any registrants under the Lobbying Disclosure Act of 1995 have made a lobbying contact on behalf of the offeror with respect to this contract, the offeror shall complete and submit, with its offer, OMB Standard Form LLL, Disclosure of Lobbying Activities, to provide the name of the registrants. The offeror need not report regularly employed officers or employees of the offeror to whom payments of reasonable compensation were made.

E. *Penalty.* Submission of this certification and disclosure is a prerequisite for making or entering into this contract imposed by 31 U.S.C. 1352.Any person who makes an expenditure prohibited under this provision or who fails to file or amend the disclosure required to be filed or amended by this provision, shall be subject to a civil penalty of not less than $10,000, and not more than $100,000, for each such failure.

Code of Business Ethics and Conduct *(cl. 406 - Oct 2011)*

By submission of this offer, the offeror certifies that it conducts its business fairly, impartially, and in an ethical and proper manner. The offeror also certifies that it maintains a Code of Business Ethics and Conduct and adheres to its terms. The offeror agrees, in consideration of the opportunity to propose on this requirement, that the offeror shall immediately report all unethical or improper conduct by the offeror or Buyer's agents in connection with this solicitation or the resulting contract to the U.S. Department of Energy, Office of Inspector General, and the Battelle Contracts Representative.

Cost Accounting Standards Notices and Certification *(cl. 416 - Oct 2011)*

Note: This notice does not apply to small businesses or foreign governments. This notice is in three parts, identified by Roman numerals I through III.

Offerors shall examine each part and provide the requested information in order to determine Cost Accounting Standards (CAS) requirements applicable to any resultant contract.

If the offeror is an educational institution, Part II does not apply unless the contemplated contract will be subject to full or modified CAS coverage pursuant to 48 CFR 9903.201-2(c)(5) or 9903.201-2(c)(6), respectively.

I. DISCLOSURE STATEMENT—COST ACCOUNTING PRACTICES AND CERTIFICATION

A. Any contract in excess of $700,000 resulting from this solicitation will be subject to the requirements of the Cost Accounting Standards Board (48 CFR Chapter 99), except for those contracts which are exempt as specified in 48 CFR 9903.201-1.

B. Any offeror submitting a proposal which, if accepted, will result in a contract subject to the requirements of 48 CFR Chapter 99 must, as a condition of contracting, submit a Disclosure Statement as required by 48 CFR 9903.202. When required, the Disclosure Statement must be submitted as a part of the offeror's proposal under this solicitation unless the offeror has already submitted a Disclosure Statement disclosing the practices used in connection with the pricing of this proposal. If an applicable Disclosure Statement has already been submitted, the offeror may satisfy the requirement for submission by providing the information requested in paragraph (c) of Part I of this provision.

Caution: In the absence of specific regulations or agreement, a practice disclosed in a Disclosure Statement shall not, by virtue of such disclosure, be deemed to be a proper, approved, or agreed-to practice for pricing proposals or accumulating and reporting contract performance cost data.

C. Check the appropriate box below:

☐ 1. *Certificate of Concurrent Submission of Disclosure Statement*. The offeror hereby certifies that, as a part of the offer, copies of the Disclosure Statement have been submitted as follows:

a. Original and one copy to the cognizant Administrative Contracting Officer (ACO) or cognizant Federal agency official authorized to act in that capacity (Federal official), as applicable; and

b. One copy to the cognizant Federal auditor.

(Disclosure must be on Form No. CASB DS-1 or CASB DS-2, as applicable. Forms may be obtained from the cognizant ACO or Federal official and/or from the loose-leaf version of the Federal Acquisition Regulation.)

Date of Disclosure Statement: _____

Name and Address of Cognizant ACO or Federal Official Where Filed: _____

_____

_____

The offeror further certifies that the practices used in estimating costs in pricing this proposal are consistent with the cost accounting practices disclosed in the Disclosure Statement.

☐ 2. *Certificate of Previously Submitted Disclosure Statement*. The offeror hereby certifies that the required Disclosure Statement was filed as follows:

Date of Disclosure Statement: _____

Name and Address of Cognizant ACO or Federal Official Where Filed: _____

_____

_____

The offeror further certifies that the practices used in estimating costs in pricing this proposal are consistent with the cost accounting practices disclosed in the Disclosure Statement.

☐ 3. *Certificate of Monetary Exemption*. The offeror hereby certifies that the offeror, together with all divisions, subsidiaries, and affiliates under common control, did not receive net awards of negotiated prime contracts and subcontracts subject to CAS totaling $50 million or more in the cost accounting period immediately preceding the period in which this proposal was submitted. The offeror further certifies that if such status changes before an award resulting from this proposal, the offeror will advise the Contracting Officer immediately.

☐ 4. *Certificate of Interim Exemption*. The offeror hereby certifies that (i) the offeror first exceeded the monetary exemption for disclosure, as defined in (3) of this subsection, in the cost accounting period immediately preceding the period in which this offer was submitted and (ii) in accordance with 48 CFR 9903.202-1, the offeror is not yet required to submit a Disclosure Statement. The offeror further certifies that if an award resulting from this proposal has not been made within 90 days after the end of that period, the offeror will immediately submit a revised certificate to the Contracting Officer, in the form specified under Paragraph C.1. or C.2. of Part I of this provision, as appropriate, to verify submission of a completed Disclosure Statement.

☐ 5. *Certificate of Disclosure Statement Due Date by Educational Institution.* If the offeror is an educational institution that, under the transition provisions of 48 CFR 9903.202-1(f), is or will be required to submit a Disclosure Statement after receipt of this award, the offeror hereby certifies that (check one and complete):

☐ A Disclosure Statement Filing Due Date of _____ has been established with the cognizant Federal agency.

☐ The Disclosure Statement will be submitted within the 6-month period ending __ months after receipt of this award.

Caution: Offerors currently required to disclose because they were awarded a CAS-covered prime contract or subcontract of $50 million or more in the current cost accounting period may not claim this exemption (4). Further, the exemption applies only

in connection with proposals submitted before expiration of the 90-day period following the cost accounting period in which the monetary exemption was exceeded.

II. COST ACCOUNTING STANDARDS—ELIGIBILITY FOR MODIFIED CONTRACT COVERAGE

If the offeror is eligible to use the modified provisions of 48 CFR 9903.201-2(b) and elects to do so, the offeror shall indicate by checking the box below. Checking the box below shall mean that the resultant contract is subject to the Disclosure and Consistency of Cost Accounting Practices clause in lieu of the Cost Accounting Standards clause.

☐ The offeror hereby claims an exemption from the Cost Accounting Standards clause under the provisions of 48 CFR 9903.201-2(b) and certifies that the offeror is eligible for use of the Disclosure and Consistency of Cost Accounting Practices clause because during the cost accounting period immediately preceding the period in which this proposal was submitted, the offeror received less than $50 million in awards of CAS-covered prime contracts and subcontracts. The offeror further certifies that if such status changes before an award resulting from this proposal, the offeror will advise the Contracting Officer immediately.

Caution: An offeror may not claim the above eligibility for modified contract coverage if this proposal is expected to result in the award of a CAS-covered contract of $50 million or more or if, during its current cost accounting period, the offeror has been awarded a single CAS-covered prime contract or subcontract of $50 million or more.

III. ADDITIONAL COST ACCOUNTING STANDARDS APPLICABLE TO EXISTING CONTRACTS

The offeror shall indicate below whether award of the contemplated contract would, in accordance with Paragraph A.3. of the Cost Accounting Standards clause, require a change in established cost accounting practices affecting existing contracts and subcontracts.

☐ Yes ☐ No

SIGNATURE

Note: A person authorized to make legally binding commitments on behalf of the offeror must sign below. Signature constitutes a representation that reasonable and prudent inquiry has been made to ascertain the true and accurate basis of all statements. Statements which a person knows or has reason to know are false, fictitious, or fraudulent may result in criminal or civil penalties, as prescribed in 18 USC 1001 and 31 USC 3802(a)(2). These Representations and Certifications shall remain in effect for a period of one (1) year from the date signed and shall satisfy any subsequent proposal requirements during that one-year period. The Offeror shall notify Battelle of any changes that occur in any of the representation or certifications during that period.

Authorized Signature _____

Signer's Name (Printed) _____

Title _____

Date _____

Battelle
The Business of Innovation

Part I – Schedule
Section "A" Contract Form

Solicitation, Offer and Award	Request No: 242558	Date Issued: 05/21/2013	Page of pages: 1 of 1

1. Description:

3410 Lab 1401 Modifications

2. NAICS Code: 236220

3. Contract / Modification No.:

4. This Solicitation has been set aside for Small Business Concerns: YES ☒ NO ☐

5. Solicitation Method:

☒ Invitation for Bid – IFB *(Sealed Bid)*
☐ Request for Proposal – RFP *(Negotiated)*

6. Type of Contract:

☒ Fixed Price ☐ Labor-Hour / Time-and-Material ☐ Cost Reimbursable ☐ IQ

(a) SOLICITATION

7. Sealed offers for furnishing the supplies or services in the Schedule will be received at the place specified in box 8. In sealed bid solicitations "offer" and offeror" mean "bid" and "bidder." All offers are subject to the terms and conditions in this solicitation.

8. Address Offer to:

Battelle Memorial Institute
902 Battelle Blvd
Attn: GV Hyatt, Mail Stop J2-05
Richland, WA 99352

9. Offer Due Date:

06/11/2013

10. For Information Call: Garrett Hyatt

Telephone: (509) 371-7591
E-Mail Address: garrett.hyatt@pnnl.gov

11. TABLE OF CONTENTS

Request For Proposal *(self-deletes upon award)*

Instructions to Proposers *(self-deletes upon award)*

Representations and Certifications

Part I – The Schedule

☒	**Section A**	(A) Contract Form (and Rate Sheets)
☒	**Sections B - H**	(B) Supplies or Services, (C) Description of the Work, (D) Packaging and Marking, (E) Inspection and Acceptance, (F) Deliveries or Performance, (G) Contract Administration Data, (H) Special Contract Requirements

Part II – Contract Clauses

☒	**Section I**	Contract Clauses

Part III - List of Documents, Exhibits and Attachments

☒	**Section J**	Attachments

(b) OFFER *(Completed by Offeror)*

12. Period for Acceptance of Offers. In compliance with the above, the undersigned agrees, if this offer is accepted within 60 **calendar days** from the date of receipt of offers specified above, to furnish any or all items upon which prices are offered at the price set opposite each item, delivered at the designated point(s), within the time specified.

13. Acknowledgement of Amendments
The offeror acknowledges receipt of Solicitation Amendment Numbers:

1	2	3	4	5	6	7	8	9	10
☐	☐	☐	☐	☐	☐	☐	☐	☐	☐

14. Company Name and Address:

15. Name and Title of Person Authorized to Sign Offer:

Name: _____

Title: _____

16. Offer Amount: YES ☐ NO ☐
Bid Summary Attached

Clin 1: $

Alt 1: $

17. Authorized Signature of the Offeror:

18. Offer Date:

(c) AWARD *(Completed by Battelle)*

19. Contract Price:	20. Contract No.:	21. Contract Term:	22. Award Date:
$		Through	

23. Battelle Authorization: Your offer is hereby accepted as to the items listed above. This award consummates the contract which consists of the following documents: (a) the Battelle Solicitation, (b) your offer, and (c) this award/contract. No further contractual document is necessary.

(Garrett V. Hyatt Sr. Contract Specialist) *(Signature Authorizing Award)* *(Date)*

B. SERVICES AND PRICES/COST

1. **BASE BID:** The following Contract Line Item Numbers (CLIN's) shall be individually priced within the Contractors Lump Sum Price on the Rate sheets provided for bid:

CLIN 1: Total Fixed Price 3410 Lab 1401 Modifications

Alt 1: FMCS Graphics, sequence programming and tuning.

3. **BASIS OF AWARD:** Award shall be made upon review, negotiation and acceptance of the offerors bid.

C. DESCRIPTION OF THE WORK

1. **General.** Contractor shall perform all construction services, and provide all material, means and methods, equipment, tools and labor, necessary to complete the Work described in and reasonably inferable from the Contract Documents. The work generally includes providing labor, materials, equipment, means and methods, to complete the **331 Lab 170 VAV Retrofit** construction.

2. **Specific.** The Work includes but is not limited to the specific scope elements listed in Specification (or Statement of Work) **Division 1**.

3. **Design Documentation – Drawings and Specifications**:

a) **Drawings**: S682648-Drawings

b) **Specification**: S6982648-SPCC01_Div_1

c) **Other**: S682648_JPP_WEA, ADM-CM-064, S682648_Haskris_Document_Package, S682648_Powervar_Document_Package

5. **Sequencing**: Work Sequencing and Interim Completion Milestones of identified portions of the Work shall be in accordance with the "Work Sequence" requirements of Division 1.

D. PACKAGING AND MARKING.

(Reserved)

E. INSPECTION AND ACCEPTANCE

Battelle has the right to inspect and evaluate the work performed or being performed under the Contract, and the premises where the work is being performed, at all reasonable times and in a manner that will not unduly delay the work. If Battelle performs inspection or evaluation on the premises of the contractor or a subcontractor, the contractor shall furnish and shall require

subcontractors to furnish all reasonable facilities and assistance for the safe and convenient performance of these duties.

F. PERIOD OF PERFORMANCE

Date of Commencement

The Work shall commence within **Three (3)** calendar day(s) of Contractor's receipt of Notice to Proceed unless the parties mutually agree otherwise in writing.

Contract Completion:

1. **Work Sequencing/Interim Milestones**. Work Sequencing, Interim Milestones and/or Substantial Completion of identified portions of the Work shall be in accordance with the "Work Sequence" requirements of Division 1.

2. **Final Completion.** ***Date of Substantial Completion shall be no more than seventy (70) calendar days from Notice of Award (NOA). The date of Final Completion shall be seven (7) calendar days after the date of Substantial Completion.***

Time is of the Essence.

Battelle and Contractor mutually agree that time is of the essence with respect to the dates and times set forth in the Contract Documents.

G. CONTRACT ADMINISTRATION

General

The Contractor is solely responsible for strict compliance with all requirements of this contract. No notice, communication or representation in any form or from any person other than a Battelle Contracts Representative shall be effective to relieve the Contractor of such obligation or to stop Battelle from enforcing the contract exactly according to its written terms.

Contract Authority

Contracting authority in Battelle is by formal delegation to named individuals. Contract authority for this work has been delegated to:

Name: **Garrett V Hyatt**
Title: **Sr. Contract Specialist**
Phone: **371-7591**
Email: **garrett.hyatt@pnnl.gov**

Notwithstanding any of the other provisions of the Contract, a named and authorized Battelle Contract Representative shall be the only individual on behalf of the Battelle authorized to accept nonconforming work; waive any requirement of this Contract; or take any action involving a change in the scope, price, terms, or conditions of this Contract.

Interpretation and Intent

The Contract Documents are intended to permit the parties to complete the Work and all obligations required by the Contract Documents within the Contract Time(s) for the Contract Price. The Contract Documents are intended to be complementary and interpreted in harmony so as to avoid conflict, with words and phrases interpreted in a manner consistent with construction and design industry standards. In the event of any inconsistency, conflict, or ambiguity between or among the Contract Documents, the order of precedence shall be in accordance with the General Provisions.

The Contract Documents form the entire agreement between Battelle and Contractor and by incorporation herein are as fully binding on the parties as if repeated herein. No oral representations or other agreements have been made by the parties except as specifically stated in the Contract Documents.

Invoicing and Payment

The Contract Price shall be payable in monthly progress payments, payable Thirty (30) calendar days after receipt of a proper invoice, or at more frequent intervals as determined and approved by Battelle. Battelle prefers to receive invoices electronically. TO ENSURE PROMPT PAYMENT, submit an electronic (PDF, or WORD formatted) invoice prepared in accordance with the forms listed at www.pnl.gov/contracts/documents/invoices.asp, to Battelle at: ap.invoices@pnl.gov. If electronic transmittal is not possible, duplicate copies of the invoice and all supporting documentation will be acceptable via mail:

Battelle, Pacific Northwest Division
ATTN: ACCOUNTS PAYABLE
PO Box 999, MSIN: J1-04
Richland, WA 99352

Technical Direction

The Contractor's progress and compliance with the technical requirements of this contract will be monitored for Battelle by a Technical Administrator. The Technical Administrator is authorized to receive information, conduct inspections of work in process and witness Contractor tests. He/she has ***no authority*** to: *change or waive any provision of this contract, including but not limited to statements of work, drawings, specifications and standards, whether attached or incorporated by reference; provide interpretations of any provision or requirement of this contract; direct, advise, or recommend any particular course of conduct on the part of the Contractor; or create any legally binding commitment on behalf of Battelle*. The Technical Administrator for this Work will be:

Name: **Brian Greenaway**
Title: **Project Manager**
Phone: **509-371-7963**
Email: **brian.greenaway@pnnl.gov**

H. SPECIAL REQUIREMENTS

1. BID GUARANTEE [Adapted from FAR 52.228-1 (Sept 1996)]

(a) Failure to furnish a bid guarantee in the proper form and amount, by the time set for opening of bids, may be cause for rejection of the bid.
(b) The bidder shall furnish a bid guarantee in the form of a firm commitment, e.g., bid bond supported by good and sufficient surety or sureties acceptable to Battelle, postal money order, certified check, cashier's check, or irrevocable letter of credit. Battelle will return bid guarantees, other than bid bonds—
(1) To unsuccessful bidders as soon as practicable after the opening of bids; and
(2) To the successful bidder upon execution of Contractual documents and bonds (including any necessary coinsurance or reinsurance agreements), as required by the bid as accepted.
(c) The amount of the bid guarantee shall be 20% percent of the bid price or $3,000,000, whichever is less.
(d) If the successful bidder, upon acceptance of its bid by Battelle within the period specified for acceptance, fails to execute all Contractual documents or furnish executed bond(s) within 10 days after receipt of the forms by the bidder, Battelle may terminate the Contract for default.
(e) In the event the Contract is terminated for default, the bidder is liable for any cost of acquiring the Work that exceeds the amount of its bid, and the bid guarantee is available to offset the difference.

2. CONTRACTOR PREQUALIFICATION

(a) Contractors must meet Battelle's minimum qualification requirements to be eligible to Contract with Battelle directly as a Prime Contractor, or participate as a Subcontractor to a Prime Contractor performing Work on-site. Battelle's Prime Contractor and Subcontractor qualification requirements are posted on our Acquisition website at https://ebs.pnnl.gov/. Any required supporting documents should be attached electronically and submitted with the completed Qualification Statements. Contractors will be notified by email of the acceptability of their qualifications.
(b) Bids will be accepted from pre-qualified Contractors ONLY.
(c) Prior to any Subcontractor(s) performing Work on-site as a lower tier to a Contractor having a Contract with Battelle, the Subcontractor(s) must also be accepted as meeting Battelle's qualification requirements.

3. NOTICE OF TOTAL SMALL BUSINESS SET ASIDE (cl 607 – March 2013)

A. Definition. "Small business concern," as used in this clause, means a concern, including its affiliates that is independently owned and operated, not dominant in the field of operation in which it is bidding on Government contracts, and qualified as a small business under the size standards in this solicitation.
B. General.
1. Offers are solicited only from small business concerns. Offers received from concerns that are not small business concerns shall be considered nonresponsive and will be rejected.
2. Any award resulting from this solicitation will be made to a small business concern.

C. Agreement. A small business concern submitting an offer in its own name shall furnish, in performing the contract, only end items manufactured or produced by small business concerns in the United States or its outlying areas. If this procurement is processed under simplified acquisition procedures and the total amount of this contract does not exceed $150,000, a small business concern may furnish the product of any domestic firm. This paragraph does not apply to construction or service contracts.

******* END OF SECTION *******

PART I - Schedule

Bid Summary and Rate Sheets

This partial breakdown of key elements of cost and/or price in the Contractors bid is for administrative purposes only, and shall not be construed as intent to negotiate agreements on individual elements in the offer. As indicated in the Instructions to Bidders, award will be made on the basis of price and price related factors only, to the responsible Bidder offering the lowest total priced offer on the complete requirement.

	Bid Element	Price Breakdown	Rate Sheets
1	LABOR	$ -	**A**
2	EQUIPMENT	$ -	**B**
3	MATERIALS	$ -	**C**
4	SUBCONTRACTS	$ -	**D**
5	***BASE AMOUNT*** *(Sum of Lines 1 thru 4)*	$ -	
6	OVERHEAD	$ -	
7	PROFIT	$ -	
8	GENERAL AND ADMINISTRATIVE *(Taxes, Fees, Insurance, etc.)*	$ -	
9	**CLIN 1 - Fixed Price Contract Work** *(Total lines 5 - 8)*	$ -	
10	**CLIN 2 - Unit Price Schedule**	$ -	**E**

Rate Sheets A and B

RATE SHEET 'A' - LABOR

TRADE OR JOB CLASSIFICATION	1			2			(Columns 1+2)
	STRAIGHT TIME			OVERTIME			LABOR COST
	HOURS	RATE	COST	HOURS	RATE	COST	
			$ -			$ -	$ -
			$ -			$ -	$ -
			$ -			$ -	$ -
			$ -			$ -	$ -
			$ -			$ -	$ -
			$ -			$ -	$ -
			$ -			$ -	$ -
			$ -			$ -	$ -
			$ -			$ -	$ -
			$ -			$ -	$ -
			$ -			$ -	$ -
			$ -			$ -	$ -
			$ -			$ -	$ -
			$ -			$ -	$ -
			$ -			$ -	$ -
			$ -			$ -	$ -
			$ -			$ -	$ -
			$ -			$ -	$ -
			$ -			$ -	$ -
			$ -			$ -	$ -
			$ -			$ -	$ -
TOTAL Forward to Line 1 LABOR on Bid Summary							$ -

RATE SHEET 'B' - EQUIPMENT

DESCRIPTION (MAKE AND MODEL)	1	2	3	(Columns 1 x 2 x 3)
	DURATION	QTY	RATE	EQUIPMENT PRICE
				$ -
				$ -
				$ -
				$ -
				$ -
				$ -
				$ -
				$ -
				$ -
				$ -
				$ -
				$ -
				$ -
				$ -
				$ -
				$ -
				$ -
				$ -
				$ -
				$ -
TOTAL Forward to Line 2 EQUIPMENT on Bid Summary =				$ -

7/19/2010

RATE SHEET 'C' - MATERIALS

Add Supporting Sheets as Necessary

Key Material Suppliers	Material	Price
		$ -
		$ -
		$ -
		$ -
		$ -
		$ -
		$ -
		$ -
		$ -
		$ -
		$ -
		$ -
		$ -
		$ -
		$ -
		$ -
Balance of Materials		$ -
		$ -
		$ -
		$ -
		$ -
TOTAL Forward to Line 3 MATERIALS on Bid Summary		$ -

RATE SHEET 'D' - SUBCONTRACTORS

Add Supporting Sheets as Necessary

Subcontractor	Description of Work	Price
		$ -
		$ -
		$ -
		$ -
		$ -
		$ -
		$ -
		$ -
		$ -
		$ -
		$ -
		$ -
		$ -
		$ -
		$ -
		$ -
		$ -
		$ -
		$ -
		$ -
		$ -
		$ -
		$ -
TOTAL Forward to Line 4 SUBCONTRACTORS on Bid Summary		$ -

7/19/2010

Rate Sheet 'E' - Unit Price

Instructions: Complete the highlighted boxes requesting unit prices, markups and estimated prices for each CLIN and then transfer the Estimated Prices to the Bid Summary Form. NOTE: The quantities shown are estimates only, and as such are not guaranteed; independent circumstances shall control actual quantities performed. Payment shall be for actual quantities installed and not estimated quantities subject to the Variation in Quantities clause of the Contract General Provisions.

CLIN 2 - UNIT PRICED SCHEDULE

Part 1 - Skilled Craftsman		A (Battelle)		B (Contractor Bid)	A x B
Item	**Job Classification**	**Est. Qty**	**Unit**	**Unit Price**	**Estimate Price**
1	Carpenters		hrs		$ -
2	Cement Masons		hrs		$ -
3	Electrician		hrs		$ -
4	Ironworkers		hrs		$ -
5	Laborers		hrs		$ -
6	Operating Engineers		hrs		$ -
7	Painters		hrs		$ -
8	Pipefitters		hrs		$ -
9	Roofers		hrs		$ -
10	Sheet Metal		hrs		$ -
11	Sprinkler Fitter		hrs		$ -
12	Teamster		hrs		$ -
13	Other		hrs		$ -
				Subtotal Part 1	$ -

NOTE: For purposes of calculating a Unit Price, skilled craftsman rate, the schedule contemplates a blended rate that takes into account all possible combinations of crew sizes and crew mixes, and job classifications the Contractor may encounter in performance of directed Work of a regular straight time basis. The Unit Price rate shall be complete and inclusive of all costs, markups and fees, (including Bonding) required for the supply of a "Skilled Craftsman" on a straight time hourly basis.

Part 2 - Markups	A (Battelle) Est.	B Markup %	C [A x B] (Contractor Bid) Markup $	A + C Estimate Price
Miscellaneous Material & Equipment			$ -	$ -

NOTE: Contractor shall bid a material handling rate to furnish Battelle estimated costs of direct material and equipment to include tax, overhead and profit. The resulting estimated price shall be treated as a firm fixed price against which progress payments can be made as Job Orders are issued.

Total CLIN 2 (Part 1 + 2) Forward to Line 10 on Bid Summary	**$ -**

GENERAL PROVISIONS

Fixed Price Construction Contracts

For the Pacific Northwest National Laboratory
Operated by Battelle Memorial Institute

Battelle Memorial Institute has executed and is engaged in the performance of Prime Contract DE-AC05-76RL01830 with the United States Department of Energy (DOE), for the management, operation, and maintenance of the Pacific Northwest National Laboratory (PNNL) in Richland, Washington. This contract is entered into in furtherance of the performance of the work provided in the Prime Contract, and is subject to the following general provisions:

GENERAL ____ 3
1. Introduction ____ 3
2. Definitions ____ 3
3. Acceptance of Contract Terms and Conditions (cl 302 – October 2008) ____ 3
4. Order of Precedence - Construction ____ 3
5. Assignment (cl 357 - Jan 2003) ____ 3
6. Pacific Northwest National Laboratory or Battelle Name (cl 374 – October 2008) ____ 3
7. Insurance - Construction ____ 3
8. Labor Harmony ____ 4
9. Registration, Representations & Certifications ____ 4
10. Limitations on Subcontracting (FAR 52.219-14, Nov 2011) ____ 5
11. Performance and Payment Bonds—Construction (FAR 52.228-15, Oct 2010) ____ 5
12. Federal, State, and Local Taxes (FAR 52.229-3, Apr 2003) ____ 6
13. Payments – Construction ____ 6
14. Suspension of Work (FAR 52.242-14, Apr 1984) ____ 7
15. Stop-Work Order (FAR 52.242-15, Aug 1989) ____ 8
16. Changes (FAR 52.243-4, June 2007) ____ 8
17. Pricing of Adjustments - Construction ____ 9
18. Termination for Convenience of the Government (Fixed-Price) (FAR 52.249-2, May 2004) ____ 9
19. Default (Fixed-Price Construction) (FAR 52.249-10, Apr 1984) ____ 11
20. Failure to Perform - Construction ____ 12
21. Excusable Delays (FAR 52.249-14, Apr 1984) ____ 12
22. Disputes (FAR 52.233-1, July 2002) ____ 12
23. Indemnity (cl. 351C – Aug 2009) ____ 13
24. Public Release of Information ____ 13
25. Rights to Proposal Data ____ 13
26. Bankruptcy (cl. 318 - Nov 2008) ____ 13
MATERIAL REQUIREMENTS AND QUANTITIES ____ 13
27. Material Requirements (FAR 52.211-5, Aug 2000) ____ 13
28. Brand Name or Equal (FAR 52.211-6, Aug 1999) ____ 14
29. Variation in Estimated Quantity (FAR 52.211-18, Apr 1984) ____ 14
ENVIRONMENTAL SAFETY AND HEALTH ____ 14
30. Environment, Safety, and Health Requirements - Offsite (cl. 3113e – May 2012) ____ 14
31. Environment, Safety, and Health Requirements (10 CFR 851) ____ 14
32. Notifications and Investigations ____ 14
33. Solid Waste Management ____ 15
34. Waste Reduction Program (FAR 52.223-12, May 2011) ____ 15
35. Accident Prevention (FAR 52.236-13 Nov 1991) ____ 15
36. Sustainable Acquisition Requirements (cl. 381 – March 2012) ____ 16
QUALITY ASSURANCE ____ 16
37. Quality Assurance ____ 16
38. Suspect / Counterfeit Items ____ 16

39. Contractor Inspection Requirements (FAR 52.246-1, Apr 1984) 17
40. Inspection of Construction (FAR 52.246-12, Aug 1996) 17
41. Responsibility for Supplies (FAR 52.246-16, Apr 1984) 17
42. Warranty of Construction (FAR 52.246-21, Mar 1994) 18
CONSTRUCTION 18
43. Site Access Control 18
44. Prohibited Articles 20
45. Work Limitations, Restrictions & Requirements 20
46. Performance of Work by the Contractor (FAR 52.236-1, Apr 1984) 21
47. Differing Site Conditions (FAR 52.236-2, Apr 1984) 22
48. Site Investigation and Conditions Affecting the Work (FAR 52.236-3, Apr 1984) 22
49. Physical Data (FAR 52.236-4, Apr 1984) 22
50. Material and Workmanship (FAR 52.236-5, Apr 1984) 22
51. Superintendence by the Contractor (FAR 52.236-6, Apr 1984) 22
52. Permits and Responsibilities (FAR 52.236-7, Nov 1991) 23
53. Other Contracts (FAR 52.236-8, Apr 1984) 23
54. Protection of Existing Vegetation, Structures, Equipment, Utilities, and Improvements (FAR 52.236-9, Apr 1984) 23
55. Operations and Storage Areas (FAR 52.236-10, Apr 1984) 23
56. Use and Possession Prior to Completion (FAR 52.236-11, Apr 1984) 23
57. Cleaning Up (FAR 52.236-12Apr 1984) 23
58. Availability and Use of Utility Services (FAR 52.236-14, Apr 1984) 23
59. Schedules for Construction Contracts (FAR 52.236-15, Apr 1984) 24
60. Layout of Work (FAR 52.236-17, Apr 1984) 24
61. Organization and Direction of the Work (FAR 52.236-19, Apr 1984) 24
62. Specifications and Drawings for Construction (FAR 52.236-21, Feb 1997) 24
63. Back-Charges 25
64. Vendor Data Requirements 26
65. Cooperation with Others 26
LABOR STANDARDS 26
66. Davis-Bacon Act (FAR 52.222-6, July 2005) 26
67. Withholding of Funds (FAR 52.222-7, Feb 1988) 28
68. Payrolls and Basic Records (FAR 52.222-8, June 2010) 28
69. Apprentices and Trainees (FAR 52.222-9, July 2005) 29
70. Compliance with Copeland Act Requirements (FAR 52.222-10, Feb 1988) 30
71. Subcontracts (Labor Standards) (FAR 52.222-11, July 2005) 30
72. Contract Termination—Debarment (FAR 52.222-12, Feb 1988) 30
73. Compliance with Davis-Bacon and Related Act Regulations (FAR 52.222-13, Feb 1988) 30
74. Disputes Concerning Labor Standards (FAR 52.222-14, Feb 1988) 31
75. Notice of Labor Disputes (cl. 359 - Feb 1997) 31
76. Certification of Eligibility (FAR 52.222-15, Feb 1988) 31
CLAUSES INCORPORATED BY REFERENCE 31

GENERAL

1. Introduction

A. The construction covered by this Contract shall be furnished subject to the terms and conditions set forth herein.

B. This Contract is the complete and exclusive statement of the terms of the agreement between Contractor and Battelle.

C. No modification of this Contract (including any addition, deletion, or other modification proposed in Contractor's acceptance) shall be binding on Battelle unless agreed to by an authorized Battelle Contracts representative in writing.

D. If any of the clauses included or incorporated into these General Provisions do not apply to the Contract Work, such clauses are considered to be self-deleting.

2. Definitions

As used throughout this Contract, the following terms shall have the meaning set forth below:

A. "Battelle" means Battelle Memorial Institute, in the performance of its prime Contract with The United States of America and includes any duly authorized representative thereof acting within authorized limits.

B. "Contracting Officer" means the Battelle Contracts Representative.

C. "Contractor" means the entity under Contract with Battelle responsible for execution of all construction work described within the Contract documents.

D. "Construction worksite," "Site of the work," and "Site" are equivalent terms for purpose of this Contract and have the meaning given in 10 CFR 851 for Construction worksite as follows:

E. "Construction worksite is the area within the limits necessary to perform the work described in the construction procurement or authorization document. It includes the facility being constructed or renovated along with all necessary staging and storage areas, as well as adjacent areas subject to project hazards."

F. "DOE" means U. S. Department of Energy or any duly authorized representative thereof.

G. "DEAR" means Department of Energy Acquisition Regulation, including all amendments and changes thereto in effect on the date of issuance of this Contract.

H. "FAR" means Federal Acquisition Regulation, including all amendments and changes thereto in effect on the date of issuance of this Contract.

I. "Government" means The United States of America, and shall include Battelle to the extent necessary to enable Battelle to administer this Contract and to perform its obligations under its Government prime Contract.

J. "Subcontract(s)" and "Subcontractor(s)" includes this Contract when used in a FAR or DEAR clause referring to a prime and Subcontractor relationship. Otherwise, it means Contractor's lower tier Subcontract(s) and Subcontractor(s), respectively. The term "Subcontract" includes purchase orders and changes, modifications, or amendments to Subcontracts and purchase orders.

3. Acceptance of Contract Terms and Conditions (cl 302 – October 2008)

The Contractor, by signing this Contract or performing the services and/or delivering the supplies identified herein, agrees to comply with all the terms and conditions and all specifications and other documents that this Contract incorporates by reference or attachment. Battelle hereby objects to any terms and conditions contained in any acknowledgment of this Contract that are different from or in addition to those mentioned in this document. Failure of Battelle to enforce any of the provisions of this Contract shall not be construed as evidence to interpret the requirements of this Contract, nor a waiver of any requirements, nor of the right of Battelle to enforce each and every provision. All rights and obligations shall survive final performance of this Contract.

4. Order of Precedence - Construction

Any inconsistency in this solicitation or Contract shall be resolved by giving precedence in the following order:

A. Contract Agreement (excluding specifications)

B. Representations and other instructions

C. General Provisions

D. Division 1 Administrative Requirements

E. Specifications

F. Drawings

5. Assignment (cl 357 - Jan 2003)

Battelle may assign this Contract to the U.S. Department of Energy (DOE) or a designee of DOE. Upon receipt by the Contractor of written notice that DOE or its designee has been assigned this Contract, Battelle shall be relieved of all responsibility hereunder, and the Contractor shall thereafter look solely to the assignee for performance of Battelle's obligations. The Contractor shall not assign this Contract or any interest therein, nor claims thereunder without the prior written consent of Battelle or Battelle's assignee. Any assignment, by operation of law or otherwise, without prior written consent of Battelle or Battelle's assignee shall be void.

6. Pacific Northwest National Laboratory or Battelle Name (cl 374 – October 2008)

The Contractor agrees not to use Pacific Northwest National Laboratory's or Battelle's name or identifying characteristics for advertising, sales promotion, raising of capital, recommending investments or other publicity purposes that implies endorsement by the Pacific Northwest National Laboratory or Battelle without the prior written consent of Battelle. This clause shall survive the termination or expiration of this contract.

7. Insurance - Construction

A. The Contractor shall, at its sole cost, obtain and maintain in force for the duration of the Contract (including the Guarantee period) insurance of the following types, with limits not less than those set forth below.

B. ***Schedule of Minimum Insurance Types and Amounts***.

1. Workers Compensation Insurance shall be at a minimum as indicated below or per the statutory limits of the State where the work is to be performed, whichever is higher:

   (i) $1,000,000 Minimum per accident;

   (ii) $1,000,000 minimum per employee for bodily injury and disease.

2. General Liability Insurance:

   (i) $2,000,000 general aggregate limit;

   (ii) $1,000,000 per occurrence for bodily injury and property damage;

   (iii) $1,000,000 per occurrence for personal and advertising injury liability;

   (iv) $1,000,000 per occurrence for products / completed operations liability. The products / completed operations liability insurance shall be maintained in full force and effect for not less than three years following completion of Contractor's services.

3. Vehicle Liability Insurance:

   $1,000,000 combined single limit of liability for bodily injury and property damage per occurrence, covering the use of all owned, non-owned, and hired automobiles.

4. Tools and Equipment Insurance (Equipment Floater Insurance)

   Contractor shall carry and maintain Tools and Equipment Insurance during performance of its services under the Contract, covering physical damage to or loss of all major tools and equipment, construction office trailers, and their contents, and vehicles for which Contractor is responsible.

5. Builders Risk Insurance:

   Contractor shall carry and maintain Builder's Risk Insurance covering loss or damage to materials and equipment furnished by Contractor that is incorporated into the completed facility. Contractor shall be responsible for the payment of the applicable deductible (which will not exceed $5,000 per occurrence) for each loss to such materials or equipment which are in the care, custody and control of the Contractor.

C. ***Proof of Insurance***. Before commencing work, the Contractor shall furnish written proof to Battelle that the required insurance has been obtained. The policies evidencing the required insurance shall contain an endorsement to the effect that any cancellation or material change affecting Government or Battelle's interests shall not be effective for such period as the laws of the State in which this Contract is to be performed specify or until 30 days after the insurer or the Contractor gives written notice to Battelle, whichever period is longer.

D. ***Subcontractor's Commercial General Liability Insurance and Vehicle Liability Insurance***. The Contractor shall insert the substance of this clause, including this paragraph, in Subcontracts under this Contract that require work on either a Battelle or Government installation, and shall require Subcontractors to provide and maintain the kinds and minimum amounts of insurance required in the Schedule. The Contractor shall maintain a copy of all Subcontractors' proofs of required insurance, and shall make copies available to Battelle upon request.

E. ***Waiver of Subrogation***. The Contractor hereby releases the Government and Battelle, including their directors and employees, and shall cause Contractor's Insurers to waive their rights of subrogation against such released parties, for losses or claims for bodily injury, property damage or other insured claims arising out of Contractor's performance under the Contract.

F. ***Claims***. In the event that claims in excess of the insured amounts provided are filed by reason of any operations under the services provided by the Contractor, the amount of excess of such claims, or any portion thereof, may be withheld from payment due until such time as the Contractor shall furnish such additional security covering such claims as may be determined by Battelle.

8. Labor Harmony

A. Battelle maintains a neutral position regarding Project Labor Agreements. This Contract Work does not mandate nor preclude participation in a Project Labor Agreement if said participation promotes the economy and efficiency in Federal procurement ascribed by Executive Order titled, "Use of Project Labor Agreements for Federal Construction Projects," dated 2/6/09.

B. In accordance with applicable prior labor agreements, laws, regulations, codes and standards, the Contractor shall furnish labor that can work in harmony with all other elements of labor employed or to be employed on the work. Without limiting the generality of the foregoing, Labor Harmony shall include the provision of labor that will not cause, cause to be threatened or give rise to either directly or indirectly, any work disruption, slowdowns or stoppages by employees of other Contractors, while performing any work or activities incidental thereto.

C. Award of any construction Contract is contingent upon the Contractor having an acceptable Plan for harmonizing labor on the Battelle Work site.

D. The Contractor agrees to insert the substance of this clause, including paragraph (c), in every Subcontract issued in performance of this Contract.

9. Registration, Representations & Certifications

A. All Contractors shall be registered in the governments Central Contractor Registration (CCR) database. Offerors and Contractors may obtain information on registration and annual confirmation requirements via the internet at http://www.ccr.gov or by calling 1-888-227-2423, or 269-961-5757.

   1. By submission of an offer, the offeror acknowledges the requirement to be registered in the CCR database prior to award, during performance, and through final payment of any Contract, basic agreement, basic ordering agreement, or blanket purchasing agreement

resulting from this solicitation.

2. Failure to register shall be grounds for rejection of Contractor bids and proposals.

B. The Contractor is responsible for the accuracy and completeness of the data within the CCR database, and for any liability resulting from Battelle's reliance on inaccurate or incomplete data. To remain registered in the CCR database after the initial registration, the Contractor is required to review and update on an annual basis from the date of initial registration or subsequent updates its information in the CCR database to ensure it is current, accurate and complete. Updating information in the CCR does not alter the terms and conditions of this Contract and is not a substitute for a properly executed Contractual document.

C. In addition to registering in CCR, the offeror must also complete an annual representations and certifications electronically via the Online Representations and Certifications Application (ORCA) website at http://orca.bpn.gov. The Contractor is required to review and verify prior to submission of any offer that the representations and certifications currently posted electronically have been entered or updated within the last 12 months, and are current, accurate, complete, and applicable to this solicitation (including the business size standard applicable to the North American Industry Classification Code [NAICS] referenced for this solicitation), as of the date of this offer.

10. Limitations on Subcontracting (FAR 52.219-14, Nov 2011)

A. This clause does not apply to the unrestricted portion of a partial set-aside.

B. *Applicability*. This clause applies only to—

1. Contracts that have been set aside or reserved for small business concerns or 8(a) concerns;

2. Part or parts of a multiple-award contract that have been set aside for small business concerns or 8(a) concerns; and

3. Orders set aside for small business or 8(a) concerns under multiple-award contracts as described in 8.405-5 and 16.505(b)(2)(i)(F).

C. By submission of an offer and execution of a contract, the Offeror/Contractor agrees that in performance of the contract in the case of a contract for—

1. Services (except construction). At least 50 percent of the cost of contract performance incurred for personnel shall be expended for employees of the concern.

2. Supplies (other than procurement from a non-manufacturer of such supplies). The concern shall perform work for at least 50 percent of the cost of manufacturing the supplies, not including the cost of materials.

3. General construction. The concern will perform at least 15 percent of the cost of the contract, not including the cost of materials, with its own employees.

4. Construction by special trade contractors. The concern will perform at least 25 percent of the cost of the contract, not including the cost of materials, with its own employees.

11. Performance and Payment Bonds—Construction (FAR 52.228-15, Oct 2010)

A. *Definitions*. As used in this clause—

"Original contract price" means the award price of the contract; or, for requirements contracts, the price payable for the estimated total quantity; or, for indefinite-quantity contracts, the price payable for the specified minimum quantity. Original contract price does not include the price of any options, except those options exercised at the time of contract award.

B. *Amount of required bonds*. Unless the resulting contract price is $150,000 or less, the successful offeror shall furnish performance and payment bonds to the Contracting Officer as follows:

1. Performance bonds (Standard Form 25). The penal amount of performance bonds at the time of contract award shall be 100 percent of the original contract price.

2. Payment Bonds (Standard Form 25A). The penal amount of payment bonds at the time of contract award shall be 100 percent of the original contract price.

3. Additional bond protection.

(i) The Government may require additional performance and payment bond protection if the contract price is increased. The increase in protection generally will equal 100 percent of the increase in contract price.

(ii) The Government may secure the additional protection by directing the Contractor to increase the penal amount of the existing bond or to obtain an additional bond.

C. *Furnishing executed bonds*. The Contractor shall furnish all executed bonds, including any necessary reinsurance agreements, to the Contracting Officer, within the time period specified in the Bid Guarantee provision of the solicitation, or otherwise specified by the Contracting Officer, but in any event, before starting work.

D. *Surety or other security for bonds*. The bonds shall be in the form of firm commitment, supported by corporate sureties whose names appear on the list contained in Treasury Department Circular 570, individual sureties, or by other acceptable security such as postal money order, certified check, cashier's check, irrevocable letter of credit, or, in accordance with Treasury Department regulations, certain bonds or notes of the United States. Treasury Circular 570 is published in the *Federal Register* or may be obtained from the:

U.S. Department of the Treasury
Financial Management Service
Surety Bond Branch
3700 East West Highway, Room 6F01
Hyattsville, MD 20782.
Or via the internet at
http://www.fms.treas.gov/c570/.

E. *Notice of subcontractor waiver of protection (40 U.S.C. 3133(c))*. Any waiver of the right to sue on the payment bond is void unless it is in writing, signed by the person whose right is waived, and executed after such person has first furnished labor or material for use in the performance of the contract.

12. Federal, State, and Local Taxes (FAR 52.229-3, Apr 2003)

A. As used in this clause—

"After-imposed Federal tax" means any new or increased Federal excise tax or duty, or tax that was exempted or excluded on the contract date, but whose exemption was later revoked or reduced during the contract period on the transactions or property covered by this contract that the Contractor is required to pay or bear as the result of legislative, judicial, or administrative action taking effect after the contract date. It does not include social security tax or other employment taxes.

"After-relieved Federal tax" means any amount of Federal excise tax or duty, except social security or other employment taxes, that would otherwise have been payable on the transactions or property covered by this contract, but which the Contractor is not required to pay or bear, or for which the Contractor obtains a refund or drawback, as the result of legislative, judicial, or administrative action taking effect after the contract date.

"All applicable Federal, State, and local taxes and duties" means all taxes and duties, in effect on the contract date, that the taxing authority is imposing and collecting on the transactions or property covered by this contract.

"Contract date" means the date set for bid opening or, if this is a negotiated contract or a modification, the effective date of this contract or modification.

"Local taxes" includes taxes imposed by a possession or territory of the United States, Puerto Rico, or the Northern Mariana Islands, if the contract is performed wholly or partly in any of those areas.

B. The contract price includes all applicable Federal, State, and local taxes and duties.

C. The contract price shall be increased by the amount of any after-imposed Federal tax, provided the Contractor warrants in writing that no amount for such newly imposed Federal excise tax or duty or rate increase was included in the contract price, as a contingency reserve or otherwise.

D. The contract price shall be decreased by the amount of any after-relieved Federal tax.

E. The contract price shall be decreased by the amount of any Federal excise tax or duty, except social security or other employment taxes, that the Contractor is required to pay or bear, or does not obtain a refund of, through the Contractor's fault, negligence, or failure to follow instructions of the Contracting Officer.

F. No adjustment shall be made in the contract price under this clause unless the amount of the adjustment exceeds $250.

G. The Contractor shall promptly notify the Contracting Officer of all matters relating to any Federal excise tax or duty that reasonably may be expected to result in either an increase or decrease in the contract price and shall take appropriate action as the Contracting Officer directs.

H. The Government shall, without liability, furnish evidence appropriate to establish exemption from any Federal, State, or local tax when the Contractor requests such evidence and a reasonable basis exists to sustain the exemption.

13. Payments – Construction

A. ***Payment of Price.*** Battelle shall pay the Contractor the Contract price as provided in this Contract. Unless otherwise provided in the Contract Schedule, the terms of payment shall be thirty (30) days after receipt of the Contractor's properly submitted invoice.

B. ***Progress Payments***. Battelle shall make progress payments monthly as the work proceeds based on estimates of work accomplished which meets the standards of quality established under the Contract, as approved by Battelle.

1. The Contractor shall furnish a breakdown of the total Contract price showing the amount included therein for each principal category of the work, consistent with the "Schedule of Values", which shall substantiate the payment amount requested in order to provide a basis for determining progress payments, in such detail as requested by Battelle.

2. In the preparation of estimates Battelle may authorize material delivered on the site and preparatory work done to be taken into consideration. Material delivered to the Contractor at locations other than the site will not be approved for progress payments.

3. As part of the request for payment, the Contractor shall submit a report summarizing the month's injuries, illnesses, property damage, fires, "near misses", etc. The summary report should be formatted to include the following items:

   (i) Average number of employees during the month,

   (ii) Total Contractor hours worked on this Contract,

   (iii) Number of sub-tier Contractors,

   (iv) Number of sub-tier Contractor employees by sub-tier Contractor, and

   (v) Total sub-tier Contractor hours (by sub-tier Contractor) worked on this Contract.

4. Submit an electronic invoice in an acceptable format to Battelle at: ap.invoices@pnnl.gov. The electronic invoice shall be integrated with the Contract scheduling requirements and tied to the Contract schedule of values. If electronic transmittal is not possible, submit the invoice and all supporting documentation via mail to:

   Battelle, Pacific Northwest Division
   ATTN: ACCOUNTS PAYABLE
   PO Box 999, MSIN: J1-04
   Richland, WA 99352

C. ***Contractor Certification.*** Along with each request for progress payments, the Contractor shall furnish the following certification, or payment shall not be made:

I hereby certify, to the best of my knowledge and belief, that:

1. The amounts requested are only for performance in accordance with the specifications, terms, and conditions of the Contract;
2. Payments to Subcontractors and suppliers have been made from previous payments received under the Contract, and timely payments will be made from the proceeds of the payment covered by this certification, in accordance with sub-Contract agreements; and
3. This request for progress payments does not include any amounts that the Contractor intends to withhold or retain from a Subcontractor or supplier in accordance with the terms and conditions of the sub-Contract.

D. ***Refund of unearned amounts.*** If the Contractor, after making a certified request for progress payments, discovers that a portion or all of such request constitutes a payment for performance by the Contractor that fails to conform to the specifications, terms, and conditions of this Contract (hereinafter referred to as the "unearned amount"), the Contractor shall:

1. Notify Battelle of such performance deficiency; and
2. Be obligated to pay Battelle an amount (computed by Battelle in the manner provided in 31 U.S.C. 3903 (c) (1)) equal to interest on the unearned amount from the date of receipt of the unearned amount until:

   (i) The date the Contractor notifies Battelle that the performance deficiency has been corrected; or

   (ii) The date the Contractor reduces the amount of any subsequent certified request for progress payments by an amount equal to the unearned amount.

E. ***Retainage.*** In making progress payments, there shall be retained 10 percent of the estimated amount until final completion and acceptance of the Contract work. However, if Battelle finds that satisfactory progress was achieved during any period for which a progress payment is to be made, Battelle may authorize a reduction in retention. When the work is substantially complete, Battelle shall retain from previously withheld funds and future progress payments that amount it considers adequate for protection of Battelle and the Government and shall release to the Contractor all the remaining withheld funds. Also, on completion and acceptance of each separate building, public work, or other division of the Contract, for which the price is stated separately in the Contract, payment shall be made for the completed work without retention of a percentage.

F. ***Title, liability, and reservation of rights.*** All material and work covered by progress payments made shall, at the time of payment, become the sole property of Battelle, but this shall not be construed as:

1. Relieving the Contractor from the sole responsibility for all material and work upon which payments have been made or the restoration of any damaged work; or
2. Waiving the right of Battelle to require the fulfillment of all of the terms of the Contract.

G. ***Reimbursement for bond premiums***. If performance or payment bonds are required under this Contract, Battelle shall pay to the Contractor that portion of the Contract price equal to the total premiums paid by the Contractor to obtain bonds. This payment shall be paid at one time to the Contractor together with the first progress payment otherwise due after the Contractor has:

1. furnished the bonds;
2. furnished evidence of full payment to the surety; and
3. submitted a request for such payment. Payments for bond premiums shall not be made as increments of individual progress payments. The retainage provisions in paragraph (e) of this clause shall not apply to that portion of a progress payment attributable to bond premiums.

H. ***Final payment.*** Upon completion and acceptance of all work, the amount due the Contractor under this Contract shall be paid upon the presentation of a properly executed invoice and after the Contractor shall have furnished Battelle with a release of all claims against Battelle and the Government arising by virtue of this Contract, other than claims in stated amounts that the Contractor has specifically excepted from the operation of the release.

I. ***Limitation because of undefinitized work.*** Notwithstanding any provision of this Contract, progress payments shall not exceed 80 percent on work accomplished on undefinitized Contract actions. A “Contract action” is any action resulting in a Contract, as defined in FAR Subpart 2.1.

14. Suspension of Work (FAR 52.242-14, Apr 1984)

A. The Contracting Officer may order the Contractor, in writing, to suspend, delay, or interrupt all or any part of the work of this contract for the period of time that the Contracting Officer determines appropriate for the convenience of the Government.

B. If the performance of all or any part of the work is, for an unreasonable period of time, suspended, delayed, or interrupted (1) by an act of the Contracting Officer in the administration of this contract, or (2) by the Contracting Officer’s failure to act within the time specified in this contract (or within a reasonable time if not specified), an adjustment shall be made for any increase in the cost of performance of this contract (excluding profit) necessarily caused by the unreasonable suspension, delay, or interruption, and the contract modified in writing accordingly. However, no adjustment shall be made under this clause for any suspension, delay, or interruption to the extent that performance would have been so suspended, delayed, or interrupted by any other cause, including the fault or negligence of

the Contractor, or for which an equitable adjustment is provided for or excluded under any other term or condition of this contract.

C. A claim under this clause shall not be allowed—

1. For any costs incurred more than 20 days before the Contractor shall have notified the Contracting Officer in writing of the act or failure to act involved (but this requirement shall not apply as to a claim resulting from a suspension order); and

2. Unless the claim, in an amount stated, is asserted in writing as soon as practicable after the termination of the suspension, delay, or interruption, but not later than the date of final payment under the contract.

15. Stop-Work Order (FAR 52.242-15, Aug 1989)

A. The Contracting Officer may, at any time, by written order to the Contractor, require the Contractor to stop all, or any part, of the work called for by this contract for a period of 90 days after the order is delivered to the Contractor, and for any further period to which the parties may agree. The order shall be specifically identified as a stop-work order issued under this clause. Upon receipt of the order, the Contractor shall immediately comply with its terms and take all reasonable steps to minimize the incurrence of costs allocable to the work covered by the order during the period of work stoppage. Within a period of 90 days after a stop-work is delivered to the Contractor, or within any extension of that period to which the parties shall have agreed, the Contracting Officer shall either—

1. Cancel the stop-work order; or

2. Terminate the work covered by the order as provided in the Default, or the Termination for Convenience of the Government, clause of this contract.

B. If a stop-work order issued under this clause is canceled or the period of the order or any extension thereof expires, the Contractor shall resume work. The Contracting Officer shall make an equitable adjustment in the delivery schedule or contract price, or both, and the contract shall be modified, in writing, accordingly, if—

1. The stop-work order results in an increase in the time required for, or in the Contractor's cost properly allocable to, the performance of any part of this contract; and

2. The Contractor asserts its right to the adjustment within 30 days after the end of the period of work stoppage; provided that, if the Contracting Officer decides the facts justify the action, the Contracting Officer may receive and act upon the claim submitted at any time before final payment under this contract.

C. If a stop-work order is not canceled and the work covered by the order is terminated for the convenience of the Government, the Contracting Officer shall allow reasonable costs resulting from the stop-work order in arriving at the termination settlement.

D. If a stop-work order is not canceled and the work covered by the order is terminated for default, the Contracting Officer shall allow, by equitable adjustment or otherwise, reasonable costs resulting from the stop-work order.

16. Changes (FAR 52.243-4, June 2007)

A. The Contracting Officer may, at any time, without notice to the sureties, if any, by written order designated or indicated to be a change order, make changes in the work within the general scope of the contract, including changes—

1. In the specifications (including drawings and designs);

2. In the method or manner of performance of the work;

3. In the Government-furnished property or services; or

4. Directing acceleration in the performance of the work.

B. Any other written or oral order (which, as used in this paragraph (b), includes direction, instruction, interpretation, or determination) from the Contracting Officer that causes a change shall be treated as a change order under this clause; Provided, that the Contractor gives the Contracting Officer written notice stating—

1. The date, circumstances, and source of the order; and

2. That the Contractor regards the order as a change order.

C. Except as provided in this clause, no order, statement, or conduct of the Contracting Officer shall be treated as a change under this clause or entitle the Contractor to an equitable adjustment.

D. If any change under this clause causes an increase or decrease in the Contractor's cost of, or the time required for, the performance of any part of the work under this contract, whether or not changed by any such order, the Contracting Officer shall make an equitable adjustment and modify the contract in writing. However, except for an adjustment based on defective specifications, no adjustment for any change under paragraph (b) of this clause shall be made for any costs incurred more than 20 days before the Contractor gives written notice as required. In the case of defective specifications for which the Government is responsible, the equitable adjustment shall include any increased cost reasonably incurred by the Contractor in attempting to comply with the defective specifications.

E. The Contractor must assert its right to an adjustment under this clause within 30 days after (1) receipt of a written change order under paragraph (a) of this clause or (2) the furnishing of a written notice under paragraph (b) of this clause, by submitting to the Contracting Officer a written statement describing the general nature and amount of the proposal, unless this period is extended by the Government. The statement of proposal for adjustment may be included in the notice under paragraph (b) of this clause.

F. No proposal by the Contractor for an equitable

adjustment shall be allowed if asserted after final payment under this contract.

17. Pricing of Adjustments - Construction

A. ***General***. When costs are a factor in any determination of a Contract price adjustment pursuant to the "Changes" clause or any other provision of this Contract, such costs shall be in accordance with the Contract cost principles and procedures, in Subpart 31 of the FAR, as supplemented or modified by DEAR Part 931 in effect on the Effective Date of the Contract, except as otherwise provided in this Contract with respect to facilities capital cost of money (CAS 414).

B. ***Requests for Equitable Adjustment***. Contractor shall submit any request for equitable adjustment pursuant the Changes clause within 10 working days after receipt of a notice of a change. The request for equitable adjustment shall include a detailed estimate with supporting calculations and pricing for the change together with any required adjustments in the schedule.

C. ***Net Cost of Change***. For adjustments that either increase or decrease the amount of the Contract Price, the application of markups for overhead and profit shall be on the net change in direct costs for the performance of the changed work.

D. ***Allowable Markups***. Allowable markup percentages on changes will not exceed the following:

1. **Changes < $100,000**. Work performing Contractor's actual overhead rate as established by audit within the last 12 months, not-to-exceed 15 percent on total direct costs, plus a negotiated allowance for profit, not-to-exceed 10 percent;

2. **Changes > $100,000**. Work performing Contractor's actual overhead rate as established by audit within the last 12 months, not-to-exceed 10% on total direct costs, plus a negotiated allowance for profit using the DEAR weighted guideline method, not to exceed 5 percent;

3. **Markups on Lower Tiers**. No more than three mark-ups, one overhead, one profit/fee applied by the Work performing Contractor, and one commission or markup inclusive of overhead and profit by the General Contractor not-to-exceed 10 percent will be allowed regardless of the number of tiers of Subcontractors or the Subcontract instrument (i.e., purchase order, Contract, etc.).

E. ***Premium Adjustments***. Costs of premium adjustments, consequent upon changes ordered, for Payment and Performance Bonds are allowable for the prime Contractor only.

F. ***Consumables***. Consumables shall not be considered on a percentage of cost bases.

G. ***Small Tools***. Consideration for Small tools is allowable at a rate *not to exceed* 3 percent of net labor cost regardless of Contractor assertions of actual cost or independent audit determinations.

H. ***Safety***. Additional costs for safety must be supported as an actual cost necessary for performance of the changed work and will not be allowed as a percentage of net labor costs.

I. ***Equipment***. Rates for rental of Contractor or Subcontractor owned equipment shall be fair and equitable. Actual cost data shall be used when such data can be determined for both ownership and operating costs for each piece of equipment or groups of similar equipment from the Contractor's accounting records. When such costs cannot be so determined, the "Rental Rate Blue Book for Construction Equipment" published by Dataquest, Inc. will be utilized for Contractor equipment in operation or on standby, provided such rental rate is reviewed by Battelle to ensure factors included within the rental rate exclude unallowable or unacceptable costs in accordance with FAR 31.105.

18. Termination for Convenience of the Government (Fixed-Price) (FAR 52.249-2, May 2004)

A. The Government may terminate performance of work under this contract in whole or, from time to time, in part if the Contracting Officer determines that a termination is in the Government's interest. The Contracting Officer shall terminate by delivering to the Contractor a Notice of Termination specifying the extent of termination and the effective date.

B. After receipt of a Notice of Termination, and except as directed by the Contracting Officer, the Contractor shall immediately proceed with the following obligations, regardless of any delay in determining or adjusting any amounts due under this clause:

1. Stop work as specified in the notice.

2. Place no further subcontracts or orders (referred to as subcontracts in this clause) for materials, services, or facilities, except as necessary to complete the continued portion of the contract.

3. Terminate all subcontracts to the extent they relate to the work terminated.

4. Assign to the Government, as directed by the Contracting Officer, all right, title, and interest of the Contractor under the subcontracts terminated, in which case the Government shall have the right to settle or to pay any termination settlement proposal arising out of those terminations.

5. With approval or ratification to the extent required by the Contracting Officer, settle all outstanding liabilities and termination settlement proposals arising from the termination of subcontracts; the approval or ratification will be final for purposes of this clause.

6. As directed by the Contracting Officer, transfer title and deliver to the Government—

   (i) The fabricated or un-fabricated parts, work in process, completed work, supplies, and other material produced or acquired for the work terminated; and

   (ii) The completed or partially completed plans, drawings, information, and other property that, if the contract had been completed, would be required to be furnished to the Government.

7. Complete performance of the work not terminated.

8. Take any action that may be necessary, or that the Contracting Officer may direct, for the protection and preservation of the property related to this contract that is in the possession of the Contractor and in which the Government has or may acquire an interest.

9. Use its best efforts to sell, as directed or authorized by the Contracting Officer, any property of the types referred to in paragraph (b)(6) of this clause; provided, however, that the Contractor (i) is not required to extend credit to any purchaser and (ii) may acquire the property under the conditions prescribed by, and at prices approved by, the Contracting Officer. The proceeds of any transfer or disposition will be applied to reduce any payments to be made by the Government under this contract, credited to the price or cost of the work, or paid in any other manner directed by the Contracting Officer.

C. The Contractor shall submit complete termination inventory schedules no later than 120 days from the effective date of termination, unless extended in writing by the Contracting Officer upon written request of the Contractor within this 120-day period.

D. After expiration of the plant clearance period as defined in Subpart 49.001 of the Federal Acquisition Regulation, the Contractor may submit to the Contracting Officer a list, certified as to quantity and quality, of termination inventory not previously disposed of, excluding items authorized for disposition by the Contracting Officer. The Contractor may request the Government to remove those items or enter into an agreement for their storage. Within 15 days, the Government will accept title to those items and remove them or enter into a storage agreement. The Contracting Officer may verify the list upon removal of the items, or if stored, within 45 days from submission of the list, and shall correct the list, as necessary, before final settlement.

E. After termination, the Contractor shall submit a final termination settlement proposal to the Contracting Officer in the form and with the certification prescribed by the Contracting Officer. The Contractor shall submit the proposal promptly, but no later than 1 year from the effective date of termination, unless extended in writing by the Contracting Officer upon written request of the Contractor within this 1-year period. However, if the Contracting Officer determines that the facts justify it, a termination settlement proposal may be received and acted on after 1 year or any extension. If the Contractor fails to submit the proposal within the time allowed, the Contracting Officer may determine, on the basis of information available, the amount, if any, due the Contractor because of the termination and shall pay the amount determined.

F. Subject to paragraph (e) of this clause, the Contractor and the Contracting Officer may agree upon the whole or any part of the amount to be paid or remaining to be paid because of the termination. The amount may include a reasonable allowance for profit on work done. However, the agreed amount, whether under this paragraph (f) or paragraph (g) of this clause, exclusive of costs shown in paragraph (g)(3) of this clause, may not exceed the total contract price as reduced by (1) the amount of payments previously made and (2) the contract price of work not terminated. The contract shall be modified, and the Contractor paid the agreed amount. Paragraph (g) of this clause shall not limit, restrict, or affect the amount that may be agreed upon to be paid under this paragraph.

G. If the Contractor and Contracting Officer fail to agree on the whole amount to be paid the Contractor because of the termination of work, the Contracting Officer shall pay the Contractor the amounts determined as follows, but without duplication of any amounts agreed upon under paragraph (f) of this clause:

1. For contract work performed before the effective date of termination, the total (without duplication of any items) of—

   (i) The cost of this work;

   (ii) The cost of settling and paying termination settlement proposals under terminated subcontracts that are properly chargeable to the terminated portion of the contract if not included in subdivision (g)(1)(i) of this clause; and

   (iii) A sum, as profit on subdivision (g)(1)(i) of this clause, determined by the Contracting Officer under 49.202 of the Federal Acquisition Regulation, in effect on the date of this contract, to be fair and reasonable; however, if it appears that the Contractor would have sustained a loss on the entire contract had it been completed, the Contracting Officer shall allow no profit under this subdivision (g)(1)(iii) and shall reduce the settlement to reflect the indicated rate of loss.

2. The reasonable costs of settlement of the work terminated, including—

   (i) Accounting, legal, clerical, and other expenses reasonably necessary for the preparation of termination settlement proposals and supporting data;

   (ii) The termination and settlement of subcontracts (excluding the amounts of such settlements); and

   (iii) Storage, transportation, and other costs incurred, reasonably necessary for the preservation, protection, or disposition of the termination inventory.

H. Except for normal spoilage, and except to the extent that the Government expressly assumed the risk of loss, the Contracting Officer shall exclude from the amounts payable to the Contractor under paragraph (g) of this clause, the fair value, as determined by the Contracting Officer, of property that is destroyed, lost, stolen, or damaged so as to become undeliverable to the Government or to a buyer.

I. The cost principles and procedures of Part 31 of the Federal Acquisition Regulation, in effect on the date of this contract, shall govern all costs claimed, agreed to, or determined under this clause.

J. The Contractor shall have the right of appeal, under the Disputes clause, from any determination made by the Contracting Officer under paragraph (e), (g), or

(l) of this clause, except that if the Contractor failed to submit the termination settlement proposal or request for equitable adjustment within the time provided in paragraph (e) or (l), respectively, and failed to request a time extension, there is no right of appeal.

K. In arriving at the amount due the Contractor under this clause, there shall be deducted—

1. All un-liquidated advance or other payments to the Contractor under the terminated portion of this contract;

2. Any claim which the Government has against the Contractor under this contract; and

3. The agreed price for, or the proceeds of sale of, materials, supplies, or other things acquired by the Contractor or sold under the provisions of this clause and not recovered by or credited to the Government.

L. If the termination is partial, the Contractor may file a proposal with the Contracting Officer for an equitable adjustment of the price(s) of the continued portion of the contract. The Contracting Officer shall make any equitable adjustment agreed upon. Any proposal by the Contractor for an equitable adjustment under this clause shall be requested within 90 days from the effective date of termination unless extended in writing by the Contracting Officer.

M. (1) The Government may, under the terms and conditions it prescribes, make partial payments and payments against costs incurred by the Contractor for the terminated portion of the contract, if the Contracting Officer believes the total of these payments will not exceed the amount to which the Contractor will be entitled.

(2) If the total payments exceed the amount finally determined to be due, the Contractor shall repay the excess to the Government upon demand, together with interest computed at the rate established by the Secretary of the Treasury under 50 U.S.C. App. 1215(b)(2). Interest shall be computed for the period from the date the excess payment is received by the Contractor to the date the excess is repaid. Interest shall not be charged on any excess payment due to a reduction in the Contractor's termination settlement proposal because of retention or other disposition of termination inventory until 10 days after the date of the retention or disposition, or a later date determined by the Contracting Officer because of the circumstances.

N. Unless otherwise provided in this contract or by statute, the Contractor shall maintain all records and documents relating to the terminated portion of this contract for 3 years after final settlement. This includes all books and other evidence bearing on the Contractor's costs and expenses under this contract. The Contractor shall make these records and documents available to the Government, at the Contractor's office, at all reasonable times, without any direct charge. If approved by the Contracting Officer, photographs, microphotographs, or other authentic reproductions may be maintained instead of original records and documents.

19. Default (Fixed-Price Construction) (FAR 52.249-10, Apr 1984)

A. If the Contractor refuses or fails to prosecute the work or any separable part, with the diligence that will insure its completion within the time specified in this contract including any extension, or fails to complete the work within this time, the Government may, by written notice to the Contractor, terminate the right to proceed with the work (or the separable part of the work) that has been delayed. In this event, the Government may take over the work and complete it by contract or otherwise, and may take possession of and use any materials, appliances, and plant on the work site necessary for completing the work. The Contractor and its sureties shall be liable for any damage to the Government resulting from the Contractor's refusal or failure to complete the work within the specified time, whether or not the Contractor's right to proceed with the work is terminated. This liability includes any increased costs incurred by the Government in completing the work.

B. The Contractor's right to proceed shall not be terminated nor the Contractor charged with damages under this clause, if—

1. The delay in completing the work arises from unforeseeable causes beyond the control and without the fault or negligence of the Contractor. Examples of such causes include—

(i) Acts of God or of the public enemy,

(ii) Acts of the Government in either its sovereign or contractual capacity,

(iii) Acts of another Contractor in the performance of a contract with the Government,

(iv) Fires,

(v) Floods,

(vi) Epidemics,

(vii) Quarantine restrictions,

(viii) Strikes,

(ix) Freight embargoes,

(x) Unusually severe weather, or

(xi) Delays of subcontractors or suppliers at any tier arising from unforeseeable causes beyond the control and without the fault or negligence of both the Contractor and the subcontractors or suppliers; and

2. The Contractor, within 10 days from the beginning of any delay (unless extended by the Contracting Officer), notifies the Contracting Officer in writing of the causes of delay. The Contracting Officer shall ascertain the facts and the extent of delay. If, in the judgment of the Contracting Officer, the findings of fact warrant such action, the time for completing the work shall be extended. The findings of the Contracting Officer shall be final and conclusive on the parties, but subject to appeal under the Disputes clause.

C. If, after termination of the Contractor's right to proceed, it is determined that the Contractor was not

in default, or that the delay was excusable, the rights and obligations of the parties will be the same as if the termination had been issued for the convenience of the Government.

D. The rights and remedies of the Government in this clause are in addition to any other rights and remedies provided by law or under this contract.

20. Failure to Perform - Construction

A. Subject to the Excusable Delays clause, if the Contractor fails to perform this Contract under its terms, Battelle shall give the Contractor written notice stating the failure. Thereafter, regardless of any other provision of this Contract, the Contractor shall not be entitled to an equitable adjustment under either this Contract or any related Contract, to the extent the equitable adjustment arises from the Contractor's failure to perform or from any reasonable remedial action taken by Battelle based upon the failure.

B. The failure of Battelle to insist, in one or more instances, upon the performance of any term of this Contract is not a waiver of Battelle's right to future performance of such term, and the Contractor's obligation for future performance of such term shall continue in effect.

C. The rights and remedies of Battelle in this clause are in addition to any other rights and remedies provided by law or under this Contract.

21. Excusable Delays (FAR 52.249-14, Apr 1984)

A. Except for defaults of subcontractors at any tier, the Contractor shall not be in default because of any failure to perform this contract under its terms if the failure arises from causes beyond the control and without the fault or negligence of the Contractor. Examples of these causes are (1) acts of God or of the public enemy, (2) acts of the Government in either its sovereign or contractual capacity, (3) fires, (4) floods, (5) epidemics, (6) quarantine restrictions, (7) strikes, (8) freight embargoes, and (9) unusually severe weather. In each instance, the failure to perform must be beyond the control and without the fault or negligence of the Contractor. "Default" includes failure to make progress in the work so as to endanger performance.

B. If the failure to perform is caused by the failure of a subcontractor at any tier to perform or make progress, and if the cause of the failure was beyond the control of both the Contractor and subcontractor, and without the fault or negligence of either, the Contractor shall not be deemed to be in default, unless—

1. The subcontracted supplies or services were obtainable from other sources;

2. The Contracting Officer ordered the Contractor in writing to purchase these supplies or services from the other source; and

3. The Contractor failed to comply reasonably with this order.

C. Upon request of the Contractor, the Contracting Officer shall ascertain the facts and extent of the failure. If the Contracting Officer determines that any failure to perform results from one or more of the causes above, the completion time shall be revised, subject to the rights of the Government under the termination clause of this contract.

22. Disputes (FAR 52.233-1, July 2002)

A. This contract is subject to the Contract Disputes Act of 1978, as amended (41 U.S.C. 601-613).

B. Except as provided in the Act, all disputes arising under or relating to this contract shall be resolved under this clause.

C. "Claim," as used in this clause, means a written demand or written assertion by one of the contracting parties seeking, as a matter of right, the payment of money in a sum certain, the adjustment or interpretation of contract terms, or other relief arising under or relating to this contract. However, a written demand or written assertion by the Contractor seeking the payment of money exceeding $100,000 is not a claim under the Act until certified. A voucher, invoice, or other routine request for payment that is not in dispute when submitted is not a claim under the Act. The submission may be converted to a claim under the Act, by complying with the submission and certification requirements of this clause, if it is disputed either as to liability or amount or is not acted upon in a reasonable time.

D. (1) A claim by the Contractor shall be made in writing and, unless otherwise stated in this contract, submitted within 6 years after accrual of the claim to the Contracting Officer for a written decision. A claim by the Government against the Contractor shall be subject to a written decision by the Contracting Officer.

(2)(i) The Contractor shall provide the certification specified in paragraph (d)(2)(iii) of this clause when submitting any claim exceeding $100,000.

(ii) The certification requirement does not apply to issues in controversy that have not been submitted as all or part of a claim.

(iii) The certification shall state as follows: "I certify that the claim is made in good faith; that the supporting data are accurate and complete to the best of my knowledge and belief; that the amount requested accurately reflects the contract adjustment for which the Contractor believes the Government is liable; and that I am duly authorized to certify the claim on behalf of the Contractor."

(3) The certification may be executed by any person duly authorized to bind the Contractor with respect to the claim.

E. For Contractor claims of $100,000 or less, the Contracting Officer must, if requested in writing by the Contractor, render a decision within 60 days of the request. For Contractor-certified claims over $100,000, the Contracting Officer must, within 60 days, decide the claim or notify the Contractor of the date by which the decision will be made.

F. The Contracting Officer's decision shall be final unless the Contractor appeals or files a suit as provided in the Act.

G. If the claim by the Contractor is submitted to the Contracting Officer or a claim by the Government is presented to the Contractor, the parties, by mutual consent, may agree to use alternative dispute

resolution (ADR). If the Contractor refuses an offer for ADR, the Contractor shall inform the Contracting Officer, in writing, of the Contractor's specific reasons for rejecting the offer.

H. The Government shall pay interest on the amount found due and unpaid from (1) the date that the Contracting Officer receives the claim (certified, if required); or (2) the date that payment otherwise would be due, if that date is later, until the date of payment. With regard to claims having defective certifications, as defined in FAR 33.201, interest shall be paid from the date that the Contracting Officer initially receives the claim. Simple interest on claims shall be paid at the rate, fixed by the Secretary of the Treasury as provided in the Act, which is applicable to the period during which the Contracting Officer receives the claim and then at the rate applicable for each 6-month period as fixed by the Treasury Secretary during the pendency of the claim.

I. The Contractor shall proceed diligently with performance of this contract, pending final resolution of any request for relief, claim, appeal, or action arising under the contract, and comply with any decision of the Contracting Officer.

23. Indemnity (cl. 351C – Aug 2009)

Contractor shall indemnify and save harmless Battelle from and against any and all liabilities and losses for injury (including death) to persons (including but not limited to Contractor's employees) or damage to property to the extent caused by a negligent act or omission or willful misconduct of the Contractor, its agents, or employees that occur during the performance of this contract, including any and all expense, legal or otherwise, incurred in the investigation or defense of any claim.

This indemnification shall not include such injuries to any person or persons or damage to or destruction of any property to the extent caused by the negligence or omission of Battelle or its employees.

In no event shall either Contractor or Battelle be liable for any special, incidental, or consequential damages of any type or nature.

24. Public Release of Information

Information, data, photographs, sketches, and advertising relating to the work under this contract, which Contractor desires to release or publish, shall be submitted to Battelle for approval 60 days prior to the desired release date. As part of the approval request, Contractor shall identify the specific media to be used as well as other pertinent details of the proposed release. All releases, regardless of tier or supplier, must have Battelle's prior approval. Contractor shall include all provisions of this clause, including this sentence, in all lower-tier subcontracts under this contract.

25. Rights to Proposal Data

Except for the technical data contained on those pages of Contractor's proposal, which are specifically identified in this contract with specific reference to this clause and asserted by Contractor as being proprietary data, it is agreed that, as a condition of the award of this contract and notwithstanding the provisions of any notice appearing on the proposal or elsewhere, Battelle and the Government shall have the right to use, duplicate, disclose and have others do so, for any purpose whatsoever, the technical data contained in the proposal upon which this contract is based.

26. Bankruptcy (cl. 318 - Nov 2008)

If the Contractor enters into any proceeding related to bankruptcy, it shall give written notice to the Battelle Contracts Representative via certified mail within five days of initiation of the proceeding. The notification shall include the date on which the proceeding was filed, the identity and location of the court, and a listing of the Battelle purchase orders, contracts, or agreements affected.

MATERIAL REQUIREMENTS AND QUANTITIES

27. Material Requirements (FAR 52.211-5, Aug 2000)

A. *Definitions*.

As used in this clause—

"New" means composed of previously unused components, whether manufactured from virgin material, recovered material in the form of raw material, or materials and by-products generated from, and reused within, an original manufacturing process; *provided* that the supplies meet contract requirements, including but not limited to, performance, reliability, and life expectancy.

"Reconditioned" means restored to the original normal operating condition by readjustments and material replacement.

"Recovered material" means waste materials and by-products recovered or diverted from solid waste, but the term does not include those materials and by-products generated from, and commonly reused within, an original manufacturing process.

"Remanufactured" means factory rebuilt to original specifications.

"Virgin material" means—

1. Previously unused raw material, including previously unused copper, aluminum, lead, zinc, iron, other metal or metal ore; or
2. Any undeveloped resource that is, or with new technology will become, a source of raw materials.

B. Unless this contract otherwise requires virgin material or supplies composed of or manufactured from virgin material, the Contractor shall provide supplies that are new, reconditioned, or remanufactured, as defined in this clause.

C. A proposal to provide unused former Government surplus property shall include a complete description of the material, the quantity, the name of the Government agency from which acquired, and the date of acquisition.

D. A proposal to provide used, reconditioned, or remanufactured supplies shall include a detailed description of such supplies and shall be submitted to the Contracting Officer for approval.

E. Used, reconditioned, or remanufactured supplies, or unused former Government surplus property, may be used in contract performance if the Contractor has proposed the use of such supplies, and the

Contracting Officer has authorized their use.

28. Brand Name or Equal (FAR 52.211-6, Aug 1999)

A. If an item in this solicitation is identified as "brand name or equal," the purchase description reflects the characteristics and level of quality that will satisfy the Government's needs. The salient physical, functional, or performance characteristics that "equal" products must meet are specified in the solicitation.

B. To be considered for award, offers of "equal" products, including "equal" products of the brand name manufacturer, must—

1. Meet the salient physical, functional, or performance characteristic specified in this solicitation;

2. Clearly identify the item by—

(i) Brand name, if any; and

(ii) Make or model number;

3. Include descriptive literature such as illustrations, drawings, or a clear reference to previously furnished descriptive data or information available to the Contracting Officer; and

4. Clearly describe any modifications the offeror plans to make in a product to make it conform to the solicitation requirements. Mark any descriptive material to clearly show the modifications.

C. The Contracting Officer will evaluate "equal" products on the basis of information furnished by the offeror or identified in the offer and reasonably available to the Contracting Officer. The Contracting Officer is not responsible for locating or obtaining any information not identified in the offer.

D. Unless the offeror clearly indicates in its offer that the product being offered is an "equal" product, the offeror shall provide the brand name product referenced in the solicitation.

29. Variation in Estimated Quantity (FAR 52.211-18, Apr 1984)

If the quantity of a unit-priced item in this contract is an estimated quantity and the actual quantity of the unit-priced item varies more than 15 percent above or below the estimated quantity, an equitable adjustment in the contract price shall be made upon demand of either party. The equitable adjustment shall be based upon any increase or decrease in costs due solely to the variation above 115 percent or below 85 percent of the estimated quantity. If the quantity variation is such as to cause an increase in the time necessary for completion, the Contractor may request, in writing, an extension of time, to be received by the Contracting Officer within 10 days from the beginning of the delay, or within such further period as may be granted by the Contracting Officer before the date of final settlement of the contract. Upon the receipt of a written request for an extension, the Contracting Officer shall ascertain the facts and make an adjustment for extending the completion date as, in the judgment of the Contracting Officer, is justified.

ENVIRONMENTAL SAFETY AND HEALTH

30. Environment, Safety, and Health Requirements - Offsite (cl. 3113e – May 2012)

A. In performing work under this contract at its own facilities or any other location that is not a DOE-owned or leased facility, the Contractor shall comply with all applicable federal, state, and local environment, safety, and health laws and regulations. The Contractor shall also perform work safely, in a manner that ensures adequate protection for employees, the public, and the environment, and shall be accountable for the safe performance of work. The Contractor shall exercise a degree of care commensurate with the work and the associated hazards. The Contractor shall ensure that management of environment, safety, and health functions and activities becomes an integral but visible part of the Contractor's work planning and execution processes.

B. The Contractor is responsible for its subcontractors' compliance with the environment, safety, and health requirements of this contract.

31. Environment, Safety, and Health Requirements (10 CFR 851)

Contractor shall refer to the Contract Schedule for any other Environment, Safety, and Health requirements pertaining to 10 CFR 851, and shall comply with such requirements, when performing any work under this contract on property or facilities owned or controlled by Battelle that are identified as PNNL Work Sites or on property or facilities owned or controlled by the United States Department of Energy (DOE), other than PNNL.

32. Notifications and Investigations

A. ***Emergency Notifications***

1. For onsite emergencies (police, fire, rescue, hazmat) call 509-375-2400.

2. For offsite emergencies (police, fire, rescue, hazmat) call 911.

B. ***Event Notification***

The Contractor shall notify the Battelle Construction Manager or Battelle Contracts Representative immediately of any OSHA-recordable injuries/illnesses, any "off-normal occurrences," or Government property damaged that the Contractor determines to have occurred in the course of operations onsite and shall furnish such further information as the Battelle Construction Manager or Battelle Contracts Representative may require. An "off-normal occurrence" is any unplanned or unexpected event, or the discovery of a deficiency in a procedure, plan, or system that has real or potentially undesirable consequences to personnel, equipment, facilities, the environment, and/or programs.

C. ***Accident Investigation***

1. The Contractor shall cooperate in the conduct of accident investigations which result in recordable injury/illness, property damage, fire, radiation event, and fatality.

2. When a Contractor employee is involved in a serious event or accident, the Contractor shall implement the following actions:

A. Secure the event scene from disturbance and

unauthorized entry pending arrival of Battelle Representatives.

B. Keep equipment or articles involved in the event from being operated, moved, or otherwise altered or repaired.

33. Solid Waste Management

A. Solid Waste Management. The Contractor is responsible to manage solid waste in accordance with all applicable Federal, State and local laws. The Contractor shall follow Battelle's Standards Based Management System requirements for accumulation, interim storage and final disposal of the following types of solid waste:

1. Hazardous waste including soil or debris contaminated with hazardous waste.
2. Radioactive contaminated waste, materials and equipment.
3. Materials containing asbestos.
4. Materials containing polychlorinated biphenyls (PCBs).
5. Unused residual construction materials, not the property of Battelle, may be retained by the Contractor for future use or disposal by the Contractor. Such materials must otherwise be managed in accordance with Battelle's SBMS requirements while on Battelle managed property.

B. Environmental Permits / Notifications. The Contractor shall coordinate the preparation of environmental permit applications / notifications with Battelle's ES&H Organization for the purpose of integrating new and existing environmental approvals. The Contractor shall Notify Battelle, prior to commencing construction, in the following circumstances:

1. Clean Air Act Permits.

(i). Notice of Intent to Remove Asbestos. The Contractor shall contact Battelle before proceeding with work that could disturb asbestos and materials containing asbestos. A representative from Battelle's ES&H organization will assist the Contractor in preparing the Notice of Intent to remove asbestos for submittal to the appropriate regulatory agency.

(ii). Construction / Demolition activities which could disturb / disperse radioactive contamination (e.g. excavation of contaminated soils or demolition of contaminated structures)

2. Clean Water Act Permits. The Contractor shall notify Battelle prior to commencing construction activities which may require clean water act permits including but not limited to:

(i). Disturbing greater than one acre of land

(ii). Construction of ground water wells

(iii). Discharge of liquid effluent (to ground; or existing sewer systems)

(iv). Installation of temporary or permanent septic systems

(v). Placement or installation of above-ground tanks for fuel storage

3. Underground Storage Tanks. The Contractor shall notify Battelle prior to commencing construction activities to install or remove any underground storage tank.

C. Spills and Releases. The Contractor shall manage hazardous substances (as defined by State of Washington regulations, including petroleum) in accordance with regulatory requirements and in a manner that prevents accidental spillage or release to the environment. In the event of a spill or release, the Contractor shall immediately:

1. Notify the Battelle Construction Manager of the spill; and
2. Respond to, control, and remediate any spill or release of hazardous substances or hazardous waste, managing spill residues in accordance with applicable Federal, DOE, State and Local regulations and requirements.

34. Waste Reduction Program (FAR 52.223-12, May 2011)

A. *Definitions*. As used in this clause—

"Recycling" means the series of activities, including collection, separation, and processing, by which products or other materials are recovered from the solid waste stream for use in the form of raw materials in the manufacture of products other than fuel for producing heat or power by combustion.

"Waste prevention" means any change in the design, manufacturing, purchase, or use of materials or products (including packaging) to reduce their amount or toxicity before they are discarded. Waste prevention also refers to the reuse of products or materials.

"Waste reduction" means preventing or decreasing the amount of waste being generated through waste prevention, recycling, or purchasing recycled and environmentally preferable products.

B. Consistent with the requirements of section 3(e) of Executive Order 13423, the Contractor shall establish a program to promote cost-effective waste reduction in all operations and facilities covered by this contract. The Contractor's programs shall comply with applicable Federal, State, and local requirements, specifically including Section 6002 of the Resource Conservation and Recovery Act (42 U.S.C. 6962, *et seq*.) and implementing regulations (40 CFR Part 247).

35. Accident Prevention (FAR 52.236-13 Nov 1991)

A. The Contractor shall provide and maintain work environments and procedures which will—

1. Safeguard the public and Government personnel, property, materials, supplies, and equipment exposed to Contractor operations and activities;
2. Avoid interruptions of Government operations and delays in project completion dates; and
3. Control costs in the performance of this contract.

B. For these purposes on contracts for construction or dismantling, demolition, or removal of improvements,

the Contractor shall—

1. Provide appropriate safety barricades, signs, and signal lights;

2. Comply with the standards issued by the Secretary of Labor at 29 CFR Part 1926 and 29 CFR Part 1910; and

3. Ensure that any additional measures the Contracting Officer determines to be reasonably necessary for the purposes are taken.

C. If this contract is for construction or dismantling, demolition or removal of improvements with any Department of Defense agency or component, the Contractor shall comply with all pertinent provisions of the latest version of U.S. Army Corps of Engineers Safety and Health Requirements Manual, EM 385-1-1, in effect on the date of the solicitation.

D. Whenever the Contracting Officer becomes aware of any noncompliance with these requirements or any condition which poses a serious or imminent danger to the health or safety of the public or Government personnel, the Contracting Officer shall notify the Contractor orally, with written confirmation, and request immediate initiation of corrective action. This notice, when delivered to the Contractor or the Contractor's representative at the work site, shall be deemed sufficient notice of the noncompliance and that corrective action is required. After receiving the notice, the Contractor shall immediately take corrective action. If the Contractor fails or refuses to promptly take corrective action, the Contracting Officer may issue an order stopping all or part of the work until satisfactory corrective action has been taken. The Contractor shall not be entitled to any equitable adjustment of the contract price or extension of the performance schedule on any stop work order issued under this clause.

E. The Contractor shall insert this clause, including this paragraph (e), with appropriate changes in the designation of the parties, in subcontracts.

36. Sustainable Acquisition Requirements (cl. 381 – March 2012)

Battelle is committed to managing its operations in a sustainable manner which promotes the natural environment and protects the health and well-being of its employees and contractor service providers. In the performance of work under this contract, the Contractor shall provide products that comply with Federal law as follows (regardless of any notations on the respective websites):

Recycled Content as designated by the Environmental Protection Agency (EPA) - http://www.epa.gov/epawaste/conserve/tools/cpg/products/index.htm

Biobased Products as designated by the United States Department of Agriculture (USDA) - http://www.biopreferred.gov/ProposedAndFinalItemDesignations.aspx

Energy-Efficient Products such as Energy Star certified and FEMP-designated products - http://www.energystar.gov/index.cfm?c=product_specs.pt_product_specs and http://www1.eere.energy.gov/femp/technologies/eep_purchasingspecs.html

Water-Efficient Products as designated by the EPA for their WaterSense® label program - http://www.epa.gov/watersense/products/index.html

Environmentally preferable and energy efficient electronics, including desktop computers, laptops and monitors, as specified at the Green Electronics Council's Electronic Products Environmental Assessment Tool (EPEAT) registry- http://ww2.epeat.net/searchoptions.aspx)

Non-Ozone Depleting Alternative Products as designated by the EPA - http://www.epa.gov/ozone/snap/index.html

QUALITY ASSURANCE

37. Quality Assurance

The Contractor shall assure that all work (e.g., submittals, products, manufacture, fabrication, installation of products and components, workmanship, inspection, and testing) performed by it or its Subcontractors and suppliers is in compliance with all contract documents (i.e., technical specifications, drawings, and Division 1). Work may include products and services (e.g., welding, nondestructive examination, soldering workmanship, manufacturer of radiation calibration standards, and equipment) that necessitate additional or special Quality Assurance / Quality Control, requirements, including the need for a documented Quality Assurance program. When such requirements are applicable to the Contractor's work, they will be identified specifically in the contract documents. The Contractor shall require, in writing, Subcontractors of all tiers to comply with all applicable contractual requirements.

38. Suspect / Counterfeit Items

A. Battelle's Suspect / Counterfeit Items (S/CI) program responds to the S/CI requirements in the following documents:

1. DOE Order 414.1C, —Quality Assurance Attachment 3, addresses the requirement for the S/CI prevention process and the control of S/CIs;

2. DOE G 414.1-3, —Suspect/Counterfeit Items Guide for Use with 10 CFR 830, Subpart A, Energy/Nuclear Safety Management/Quality Assurance Requirements and DOE O 414.1B, Quality Assurance;

3. DOE Order 231.1A Change 1, —Environment, Safety, and Health Reporting, and DOE Order 221.1, —Reporting Fraud, Waste, and Abuse to the Office of Inspector General addresses reporting requirements for discovery of S/CIs.

B. S/CIs may pose immediate and potential threats to the safety of Battelle, DOE and contractor workers, the public, and the environment. Failure of a safety or mission critical system due to an S/CI could also have security implications at DOE facilities. The most common S/CIs found at Battelle and DOE facilities have been threaded fasteners fraudulently marked as high-strength bolts, and refurbished electrical circuit breakers sold and distributed under false certifications. Falsified documentation has also misled purchasers into accepting S/CIs that do not conform to specified requirements. Forms of misrepresentation include the following:

1. Falsified product sources (counterfeits);

2. Falsified or modified quality records;

3. False marking as to class, type, or grade;

4. Mixing of unmarked with marked materials;

5. False labeling as to qualification or acceptance by testing/certifying organizations; and

6. Used products misrepresented as new products.

C. S/CI Awareness Training Manual developed by DOE-Office of Corporate Safety Analysis (HS-30) that can help to identify and disposition S/CI's discovered at Battelle and DOE facilities can be accessed at the following link http://www.hss.energy.gov/CSA/CSP/sci/SCI_TrainingManual.pdf.

D. The Contractor shall assure that all products delivered on this contract do not contain S/CI parts. If S/CI parts are discovered, notify Battelle for further direction. All discrepant part(s)/product(s) will be replaced at the Contractor's expense.

39. Contractor Inspection Requirements (FAR 52.246-1, Apr 1984)

The Contractor is responsible for performing or having performed all inspections and tests necessary to substantiate that the supplies or services furnished under this contract conform to contract requirements, including any applicable technical requirements for specified manufacturers' parts. This clause takes precedence over any Government inspection and testing required in the contract's specifications, except for specialized inspections or tests specified to be performed solely by the Government.

40. Inspection of Construction (FAR 52.246-12, Aug 1996)

A. *Definition.* "Work" includes, but is not limited to, materials, workmanship, and manufacture and fabrication of components.

B. The Contractor shall maintain an adequate inspection system and perform such inspections as will ensure that the work performed under the contract conforms to contract requirements. The Contractor shall maintain complete inspection records and make them available to the Government. All work shall be conducted under the general direction of the Contracting Officer and is subject to Government inspection and test at all places and at all reasonable times before acceptance to ensure strict compliance with the terms of the contract.

C. Government inspections and tests are for the sole benefit of the Government and do not—

1. Relieve the Contractor of responsibility for providing adequate quality control measures;

2. Relieve the Contractor of responsibility for damage to or loss of the material before acceptance;

3. Constitute or imply acceptance; or

4. Affect the continuing rights of the Government after acceptance of the completed work under paragraph (i) of this section.

D. The presence or absence of a Government inspector does not relieve the Contractor from any contract requirement, nor is the inspector authorized to change any term or condition of the specification without the Contracting Officer's written authorization.

E. The Contractor shall promptly furnish, at no increase in contract price, all facilities, labor, and material reasonably needed for performing such safe and convenient inspections and tests as may be required by the Contracting Officer. The Government may charge to the Contractor any additional cost of inspection or test when work is not ready at the time specified by the Contractor for inspection or test, or when prior rejection makes re-inspection or retest necessary. The Government shall perform all inspections and tests in a manner that will not unnecessarily delay the work. Special, full size, and performance tests shall be performed as described in the contract.

F. The Contractor shall, without charge, replace or correct work found by the Government not to conform to contract requirements, unless in the public interest the Government consents to accept the work with an appropriate adjustment in contract price. The Contractor shall promptly segregate and remove rejected material from the premises.

G. If the Contractor does not promptly replace or correct rejected work, the Government may—

1. By contract or otherwise, replace or correct the work and charge the cost to the Contractor; or

2. Terminate for default the Contractor's right to proceed.

H. If, before acceptance of the entire work, the Government decides to examine already completed work by removing it or tearing it out, the Contractor, on request, shall promptly furnish all necessary facilities, labor, and material. If the work is found to be defective or nonconforming in any material respect due to the fault of the Contractor or its subcontractors, the Contractor shall defray the expenses of the examination and of satisfactory reconstruction. However, if the work is found to meet contract requirements, the Contracting Officer shall make an equitable adjustment for the additional services involved in the examination and reconstruction, including, if completion of the work was thereby delayed, an extension of time.

I. Unless otherwise specified in the contract, the Government shall accept, as promptly as practicable after completion and inspection, all work required by the contract or that portion of the work the Contracting Officer determines can be accepted separately. Acceptance shall be final and conclusive except for latent defects, fraud, gross mistakes amounting to fraud, or the Government's rights under any warranty or guarantee.

41. Responsibility for Supplies (FAR 52.246-16, Apr 1984)

A. Title to supplies furnished under this contract shall pass to the Government upon formal acceptance, regardless of when or where the Government takes physical possession, unless the contract specifically provides for earlier passage of title.

B. Unless the contract specifically provides otherwise,

risk of loss of or damage to supplies shall remain with the Contractor until, and shall pass to the Government upon—

1. Delivery of the supplies to a carrier, if transportation is f.o.b. origin; or

2. Acceptance by the Government or delivery of the supplies to the Government at the destination specified in the contract, whichever is later, if transportation is f.o.b. destination.

C. Paragraph (b) of this clause shall not apply to supplies that so fail to conform to contract requirements as to give a right of rejection. The risk of loss of or damage to such nonconforming supplies remains with the Contractor until cure or acceptance. After cure or acceptance, paragraph (b) of this clause shall apply.

D. Under paragraph (b) of this clause, the Contractor shall not be liable for loss of or damage to supplies caused by the negligence of officers, agents, or employees of the Government acting within the scope of their employment.

42. Warranty of Construction (FAR 52.246-21, Mar 1994)

A. In addition to any other warranties in this contract, the Contractor warrants, except as provided in paragraph (i) of this clause, that work performed under this contract conforms to the contract requirements and is free of any defect in equipment, material, or design furnished, or workmanship performed by the Contractor or any subcontractor or supplier at any tier.

B. This warranty shall continue for a period of 1 year from the date of final acceptance of the work. If the Government takes possession of any part of the work before final acceptance, this warranty shall continue for a period of 1 year from the date the Government takes possession.

C. The Contractor shall remedy at the Contractor's expense any failure to conform, or any defect. In addition, the Contractor shall remedy at the Contractor's expense any damage to Government-owned or controlled real or personal property, when that damage is the result of—

1. The Contractor's failure to conform to contract requirements; or

2. Any defect of equipment, material, workmanship, or design furnished.

D. The Contractor shall restore any work damaged in fulfilling the terms and conditions of this clause. The Contractor's warranty with respect to work repaired or replaced will run for 1 year from the date of repair or replacement.

E. The Contracting Officer shall notify the Contractor, in writing, within a reasonable time after the discovery of any failure, defect, or damage.

F. If the Contractor fails to remedy any failure, defect, or damage within a reasonable time after receipt of notice, the Government shall have the right to replace, repair, or otherwise remedy the failure, defect, or damage at the Contractor's expense.

G. With respect to all warranties, express or implied, from subcontractors, manufacturers, or suppliers for work performed and materials furnished under this contract, the Contractor shall—

A. Obtain all warranties that would be given in normal commercial practice;

B. Require all warranties to be executed, in writing, for the benefit of the Government, if directed by the Contracting Officer; and

C. Enforce all warranties for the benefit of the Government, if directed by the Contracting Officer.

H. In the event the Contractor's warranty under paragraph (b) of this clause has expired, the Government may bring suit at its expense to enforce a subcontractor's, manufacturer's, or supplier's warranty.

I. Unless a defect is caused by the negligence of the Contractor or subcontractor or supplier at any tier, the Contractor shall not be liable for the repair of any defects of material or design furnished by the Government nor for the repair of any damage that results from any defect in Government-furnished material or design.

J. This warranty shall not limit the Government's rights under the Inspection and Acceptance clause of this contract with respect to latent defects, gross mistakes, or fraud.

CONSTRUCTION

43. Site Access Control

A. Contractor shall be responsible for controlling access to the Site and ensuring that all Contractor personnel including Subcontractor personnel, delivery drivers and vendors have received adequate and appropriate security and site orientation. Visible symbols such as hard hat stickers, badges, etc., shall be used to indicate the person has Contractor authorization to be on the Site.

B. Unless Battelle issued badges are identified elsewhere in the contract documents as a condition of site access, Contractor shall have general use of areas designated in the contract documents for construction operations during the contract performance period.

C. Personnel protective equipment (PPE) requirements shall be appropriate to the identified hazards present and shall be as indicated in the General and Administrative Requirements for the Work (Division I Requirements) and on the Contractors approved Job Safety Analysis (JSA).

D. Contractor is responsible to ensure that it's direct hired and Subcontractor employees who will work on the Site and are newly hired for the Work, present proof of a negative drug screen dated within the last three (3) months prior to authorizing initial site access. Contractor employees hired prior to the start of this Work and now assigned to this Work must present proof of a negative drug screen dated within the last 12 months.

1. Only drug tests by a Substance Abuse and Mental Health Services (SAMHSA) certified laboratory will be considered acceptable as proof of a negative drug screen.

2. A confirmed positive will deny employee access to the Site for a minimum of one (1) year.

3. Suspect Behavior or Circumstances. If Battelle, or the Contractor or Subcontractor believes that a Contractor or Subcontractor employee's job performance is being adversely affected by drug or substance (including alcohol) use, Battelle may direct the Contractor to remove the employee from the Site and require the employee to submit to drug testing at Contractor's expense. Examples of behavior or circumstances indicating possible drug or substance abuse are possession, sale or delivery, or credible information that an individual is using drugs or abusing alcohol, or an accident or injury.

E. ***Disciplinary Policy and Suspension of Access***

1. General. It is the Contractor's responsibility to implement a policy which provides for discipline of unacceptable behaviors. Disciplinary policy should categorize the severity of the misconduct with a graded approach to implementing the disciplinary actions that result.

2. Contractor may adopt Battelle's model disciplinary policy or submit for approval a Contractor plan.

3. If the Contractor or its Subcontractors fail to have or enforce an approved plan or fail to take appropriate disciplinary action(s) as a result of identified employee misconduct, Battelle will respond to misconduct using a graded approach, considering the nature and severity of the misconduct in accordance with the following general guidelines.

   (i). First Infraction. A first infraction could result in actions ranging from a verbal reprimand to denying the employee further access to the site for the remainder of the work.

   (ii). II. Second Infraction. A second infraction, not necessarily of the same type, could result in actions ranging from a written reprimand to denying the employee further access to the site for the remainder of the work.

   (iii). III. Third Infraction. A third infraction could result in suspension from the site ranging from 3-days to 365 days, or the remainder of the work, whichever is longer.

F. ***Battelle Issued Badges***

1. If a Battelle issued badge is required for persons performing work on the Site, Battelle's Badging office is located in the Environmental Technology Building (ETB), Room 1104. The ETB Building address is 3200 Q Avenue, Richland WA 99352. Badges may be picked up between the hours of 7:30 A.M. to 4:00 P.M. Monday through Friday (excluding holidays).

2. Employee Termination / Completion of the Work. Upon termination of employment or completion of the Contractors work, and before final payment shall be made, all badges and dosimeters issued to Contractor employees shall be returned to the issuing office.

3. Lost badges and/or dosimeter shall be reported immediately upon discovery to Battelle. Battelle will charge Contractor $100 for each badge or dosimeter not returned. The charge shall be deducted from payments otherwise due the Contractor. Refund of charges, previously collected for badges and/or dosimeters subsequently found will not be made after the date of final payment to the Contractor.

4. Training required for a Battelle issued Badge

   (i). GERT / LAB Orientation. If Contractor employees are required to successfully complete General Employee Radiation Training (GERT) / Battelle Laboratory (LAB) Orientation, GERT / LAB Orientation is estimated to take four (4) hours. The employee cost of the orientation shall be by the Contractor.

   (ii). Vendor/Contractor Orientation for non-Battelle personnel. If Contractor employees are required to successfully complete Vendor/Contractor Orientation, it is estimated to take 2 ½ hours. The employee cost of the orientation shall be by the Contractor.

   (iii). Other Required Training. Other Battelle sponsored training identified as required for performance of the contract work will be provided to the Contractor at no cost for the trainer and/or course fees. Contractor shall be responsible for the cost of the employee's time to attend. Contractor shall allow Battelle two (2) weeks to schedule the training after proper notification.

   (iv). Failed Training / Tests and Contractor —No-Shows. Contractor shall be responsible for the trainer / classroom costs associated with Contractor employees that have either failed to successfully complete a required training or have failed to show up for a scheduled training date. Costs to be charged the Contractor for retaking failed training or rescheduling due to no-shows is: $352.25 (each) for Radiation Worker I and/or II including GAP and refresher training; Lock & Tag training is $348.85; Respiratory Protection Worker training is $352.25; Asbestos Awareness, Hot Work Fire Watch and Lock-Out-Tag-Out Gap training are all $350.75, all other Battelle sponsored training is $32.11.

   (v). Offsite Training. Contractor shall be responsible for all offsite training as required for performance of the contract work. Training offered at the HAMMER facility is considered offsite, therefore the Contractor shall be responsible for course registration and payment of any fees. Quantitative Mask-Fit or additional respiratory training conducted at the HAMMER facility is considered offsite training, therefore the Contractor shall be responsible for course registration and payment of any fees.

44. Prohibited Articles

A. Prohibited Articles Anywhere. The following are Prohibited Articles anywhere on the Site and offsite locations under the cognizance of Battelle or the DOE:

1. Dangerous weapons
2. Explosives, ammunition, and incendiary devices
3. Controlled substances and drug paraphernalia
4. Alcoholic beverages
5. Contraband (includes other items prohibited by law).

B. Exclusion, Limited and/or Protected Areas. The following are Prohibited Articles within Exclusion, Limited and/or Protected Areas:

1. All items listed above, and
2. Privately owned recording equipment
3. Privately owned cameras (still, motion, video)
4. Privately owned computers and associated media (including palm pilots)
5. Privately owned cellular telephones
6. Privately owned radio transmitters.

45. Work Limitations, Restrictions & Requirements

A. ***Time***. "Time," if stated as a number of days, is calculated using calendar days, unless otherwise specified, and will include Saturdays, Sundays, and legal holidays. If the last day of the Contract period of performance falls on a Saturday, Sunday, or legal holiday, then the period shall include the next working day. The following holidays shall be non-work days under this Contract unless otherwise directed by Battelle:

New Year's Day

Memorial Day

Independence Day

Labor Day

Thanksgiving Day and the day after

Christmas Eve and Christmas Day

B. ***Working Hours***. Unless identified otherwise in the Division 1 General Requirements for the contract work, normal working hours are Monday through Friday from 7:00am to 3:30pm. The Contractor shall not perform work at the Site other than during normal working hours without prior written approval. The Contractor shall give Battelle at least two (2) hours prior notice if its employees are to be working after the normal shift period Monday through Friday. The Contractor shall give Battelle notice on the prior working day if its employees will be working before normal shift hours, Monday through Friday, or will be working at any time on Saturday, Sunday, or holidays. The notice shall include the type of work to be performed, location of work, date and hours of work, and description of any heavy equipment to be used. Battelle advance approval is required any time work is to be performed at other than normal shift periods.

C. ***Overhead Work Restrictions***. Under no conditions shall the Contractor operate or move cranes, hoists or similar equipment within 20 feet of overhead electrical conductors, guy wires, or substations, unless prior authorization for such operations is obtained from Battelle, giving full details of the method of equipment operations. Authorization from Battelle shall also be obtained when transporting materials, machinery, or other equipment, which establishes a height exceeding 15 feet from the road and/or ground surface.

D. ***Oversize Loads***. An Oversize Load permit is required when the vehicle or load exceeds: Width -8'-6" x Height –14ft x Length –40ft (single unit), or 48ft (single trailing unit). Contact Battelle to obtain the permit.

E. ***Moving Heavy Equipment***. The Contractor shall notify Battelle at least two (2) working days prior to the date it proposes to move any heavy equipment into or from the Worksite and shall not move any such equipment into or from the Worksite until receipt of written approval from Battelle. Heavy equipment will not be allowed to travel across existing paved roadways unless rubber tires or other adequate protection such as heavy planking protects such roadway. Movement of heavy equipment equipped with crawler-type treads on existing paved surfaces is forbidden and such equipment must be transported to the Worksite on rubber- tired trailers. Upon completion of the Work, the equipment shall be promptly removed from the Worksite.

F. ***System Outages***. Work, which requires any existing building utility system (including fire protection) to be taken out of service, shall be scheduled and performed so that the length of time the utility is out of service is held to a minimum. All material for the alteration and tie-in work shall be on hand when each utility service interruption is scheduled. The Contractor shall notify Battelle not less than five (5) working days prior to each required utility shutdown. All tie-in work shall be scheduled and performed so that the shutdown time will not exceed four (4) hours for water and two (2) hours for electrical or fire alarm. Battelle shall approve methods of performing the tie-in work prior to any utility system outage. Prior approval must be obtained for connection to and use of existing fire hydrants.

G. ***Excavation Requirements***.

1. Definition: "Excavations include any operation in which earth, rock, or other material in the ground (below existing grade) is moved, removed, or otherwise displaced by means or use of any hand tools, mechanical equipment or explosives."
2. Excavation permitting is required when grading, trenching, digging, ditching, drilling, tunneling, scraping, pipe plowing, and driving ground rods or posts, at a depth of 12 inches or greater.
3. Where required, the Contractor shall provide an adequate supporting mechanism to prevent undermining or movement of any load bearing concrete slabs or footings. All excavations shall comply with OSHA and DOSH regulations.
4. In the event any underground pipe line, conduit or other object not shown on the drawings or

otherwise indicated in the Specifications is encountered, the Contractor shall immediately stop work and notify Battelle.

5. Except as otherwise specified, protection (and restoration) of existing facilities shall be as specified in section titled "Protection of Existing Utilities." All underground piping, conduits, ducts, and other utilities shall be satisfactorily shored, braced and/or guyed as specified in the above referenced section.

6. Contractors shall hand-dig within five (5) feet of all known utilities.

H. ***Blind Penetration Requirements***.

1. All "Blind Penetrations" where the Contractor must penetrate into or through a wall, ceiling, floor or similar obstruction and the path of the penetration is not visible requires a Battelle Permit. The Contractor shall notify Battelle five (5) days in advance of any planned Blind Penetrations to allow Battelle time to issue the permit.

2. The Contractor shall perform a sub-surface scan using penetrating radar of the surface to be blind penetrated. The Contractor shall physically mark the location of any suspected embedment and do not proceed without release by Battelle if a suspected embedment is marked within 8 inches of the planned penetration.

3. All potentially energized circuits or sources in the proximity of the penetration shall be locked out and tagged by the Contractor in a de-energized condition.

4. All energized Contractor equipment used in blind penetrations shall be equipped with a "kill switch" or "drill stop" to effectively stop the Contractor equipment when the drill or energized penetrating equipment comes in contact with any metallic object.

5. Contractor shall notify Battelle immediately upon hitting an obstruction and/or the kill switch de-energizes the penetrating equipment. Disengaging the kill switch requires Battelle concurrence.

6. In addition to whatever other PPE the Contractor considers necessary for a Blind Penetration, the worker performing the penetration operation shall wear class 00, 500 volt rated, insulated gloves or insulated gloves rated for the voltage potential during the penetrating activity.

I. ***Adverse Weather Conditions.*** To insure worker safety, work or portions of work may be temporarily and incrementally shut down due to high winds, lighting, or other inclement weather as determined by Battelle. Contractor will not be additionally compensated in terms of cost or schedule for weather related shutdowns. Battelle will issue weather warnings via radio, telephone, public announcement, or in person. The Contractor shall ensure that all contractor and subcontractor personnel are apprised of the warnings and take the required actions as stated below.

1. Sustained winds greater than 15 mph – the necessity for crane operations will be closely scrutinized

2. Sustained winds greater than 25 mph and/or gusts greater than 40 mph – all crane activities must cease and be secured. All loose outdoor material shall be secured. The Contractor's Safety Supervisor shall evaluate work on roofs or elevated work surfaces before continuing. All personnel working outdoors are required to wear safety goggles. Depending on dust hazards, work may be stopped. Personnel may be directed to shelter.

3. Sustained winds greater than 30 mph and/or gusts greater than 45 mph – all outdoor work activities may be stopped. Personnel may be directed to shelter.

4. Sustained winds greater than 50 mph – outdoor work activities will be curtailed and limited to those approved by Battelle and Contractor's Safety Supervisor. Personnel will be directed to shelter. Site closure may be implemented and all work activities ceased.

5. Thunderstorm/lighting advisory based on lighting activity within a 30 mile radius of the site – Contractor personnel shall not work on roofs or elevated surfaces. Personnel shall stay away from equipment such as drilling rigs, cranes, boom trucks, or elevated work platforms. The "30-30 Rule" states, when you see lightning, count the time until you hear thunder. If this time is 30 seconds or less go immediately to a safe location. These protective measures shall remain in place until Battelle cancels the warning. The Hanford Weather Station (373-2716) or the National Weather Service Office (NWSO) located in Pendleton (541 276-7832) can be used to detect, locate, and determine if the hazardous weather pattern has dissipated or moved pass the 30 mile radius.

6. Contractor shall be responsible to provide snow removal and ensure safe walking and transfer conditions for walkways and access points around all site offices and work areas and the job-site within the project boundaries.

7. In response to winter storm conditions, Battelle may close or delay the site operation. If so, Battelle will make appropriate announcements and coordinate closures or early dismissals. Battelle's inclement weather hotline phone number is 509 375-2124.

8. Access to PNNL facility roofs during inclement weather may be restricted or delayed until the appropriate mitigation of snow, ice, or frost can be eliminated. Authorization to access facility roofs are controlled by the Building Manager.

46. Performance of Work by the Contractor (FAR 52.236-1, Apr 1984)

The Contractor shall perform on the site, and with its own organization, work equivalent to at least fifteen percent [15%] of the total amount of work to be performed under the contract. This percentage may be reduced by a supplemental agreement to this contract if, during performing the work, the Contractor requests a reduction and the Contracting Officer determines that the reduction would be to the advantage of the Government.

47. Differing Site Conditions (FAR 52.236-2, Apr 1984)

A. The Contractor shall promptly, and before the conditions are disturbed, give a written notice to the Contracting Officer of—

1. Subsurface or latent physical conditions at the site which differ materially from those indicated in this contract; or

2. Unknown physical conditions at the site, of an unusual nature, which differ materially from those ordinarily encountered and generally recognized as inhering in work of the character provided for in the contract.

B. The Contracting Officer shall investigate the site conditions promptly after receiving the notice. If the conditions do materially so differ and cause an increase or decrease in the Contractor's cost of, or the time required for, performing any part of the work under this contract, whether or not changed as a result of the conditions, an equitable adjustment shall be made under this clause and the contract modified in writing accordingly.

C. No request by the Contractor for an equitable adjustment to the contract under this clause shall be allowed, unless the Contractor has given the written notice required; *provided*, that the time prescribed in paragraph (a) of this clause for giving written notice may be extended by the Contracting Officer.

D. No request by the Contractor for an equitable adjustment to the contract for differing site conditions shall be allowed if made after final payment under this contract.

48. Site Investigation and Conditions Affecting the Work (FAR 52.236-3, Apr 1984)

A. The Contractor acknowledges that it has taken steps reasonably necessary to ascertain the nature and location of the work, and that it has investigated and satisfied itself as to the general and local conditions which can affect the work or its cost, including but not limited to (1) conditions bearing upon transportation, disposal, handling, and storage of materials; (2) the availability of labor, water, electric power, and roads; (3) uncertainties of weather, river stages, tides, or similar physical conditions at the site; (4) the conformation and conditions of the ground; and (5) the character of equipment and facilities needed preliminary to and during work performance. The Contractor also acknowledges that it has satisfied itself as to the character, quality, and quantity of surface and subsurface materials or obstacles to be encountered insofar as this information is reasonably ascertainable from an inspection of the site, including all exploratory work done by the Government, as well as from the drawings and specifications made a part of this contract. Any failure of the Contractor to take the actions described and acknowledged in this paragraph will not relieve the Contractor from responsibility for estimating properly the difficulty and cost of successfully performing the work, or for proceeding to successfully perform the work without additional expense to the Government.

B. The Government assumes no responsibility for any conclusions or interpretations made by the Contractor based on the information made available by the Government. Nor does the Government assume responsibility for any understanding reached or representation made concerning conditions which can affect the work by any of its officers or agents before the execution of this contract, unless that understanding or representation is expressly stated in this contract.

49. Physical Data (FAR 52.236-4, Apr 1984)

Data and information furnished or referred to below is for the Contractor's information. The Government shall not be responsible for any interpretation of or conclusion drawn from the data or information by the Contractor.

50. Material and Workmanship (FAR 52.236-5, Apr 1984)

A. All equipment, material, and articles incorporated into the work covered by this contract shall be new and of the most suitable grade for the purpose intended, unless otherwise specifically provided in this contract. References in the specifications to equipment, material, articles, or patented processes by trade name, make, or catalog number, shall be regarded as establishing a standard of quality and shall not be construed as limiting competition. The Contractor may, at its option, use any equipment, material, article, or process that, in the judgment of the Contracting Officer, is equal to that named in the specifications, unless otherwise specifically provided in this contract.

B. The Contractor shall obtain the Contracting Officer's approval of the machinery and mechanical and other equipment to be incorporated into the work. When requesting approval, the Contractor shall furnish to the Contracting Officer the name of the manufacturer, the model number, and other information concerning the performance, capacity, nature, and rating of the machinery and mechanical and other equipment. When required by this contract or by the Contracting Officer, the Contractor shall also obtain the Contracting Officer's approval of the material or articles which the Contractor contemplates incorporating into the work. When requesting approval, the Contractor shall provide full information concerning the material or articles. When directed to do so, the Contractor shall submit samples for approval at the Contractor's expense, with all shipping charges prepaid. Machinery, equipment, material, and articles that do not have the required approval shall be installed or used at the risk of subsequent rejection.

C. All work under this contract shall be performed in a skillful and workmanlike manner. The Contracting Officer may require, in writing, that the Contractor remove from the work any employee the Contracting Officer deems incompetent, careless, or otherwise objectionable.

51. Superintendence by the Contractor (FAR 52.236-6, Apr 1984)

At all times during performance of this contract and until the work is completed and accepted, the Contractor shall directly superintend the work or assign and have on the worksite a competent superintendent who is satisfactory to the Contracting Officer and has authority to act for the Contractor.

52. Permits and Responsibilities (FAR 52.236-7, Nov 1991)

The Contractor shall, without additional expense to the Government, be responsible for obtaining any necessary licenses and permits, and for complying with any Federal, State, and municipal laws, codes, and regulations applicable to the performance of the work. The Contractor shall also be responsible for all damages to persons or property that occur as a result of the Contractor's fault or negligence. The Contractor shall also be responsible for all materials delivered and work performed until completion and acceptance of the entire work, except for any completed unit of work which may have been accepted under the contract.

53. Other Contracts (FAR 52.236-8, Apr 1984)

The Government may undertake or award other contracts for additional work at or near the site of the work under this contract. The Contractor shall fully cooperate with the other contractors and with Government employees and shall carefully adapt scheduling and performing the work under this contract to accommodate the additional work, heeding any direction that may be provided by the Contracting Officer. The Contractor shall not commit or permit any act that will interfere with the performance of work by any other contractor or by Government employees.

54. Protection of Existing Vegetation, Structures, Equipment, Utilities, and Improvements (FAR 52.236-9, Apr 1984)

A. The Contractor shall preserve and protect all structures, equipment, and vegetation (such as trees, shrubs, and grass) on or adjacent to the work site, which are not to be removed and which do not unreasonably interfere with the work required under this contract. The Contractor shall only remove trees when specifically authorized to do so, and shall avoid damaging vegetation that will remain in place. If any limbs or branches of trees are broken during contract performance, or by the careless operation of equipment, or by workmen, the Contractor shall trim those limbs or branches with a clean cut and paint the cut with a tree-pruning compound as directed by the Contracting Officer.

B. The Contractor shall protect from damage all existing improvements and utilities (1) at or near the work site, and (2) on adjacent property of a third party, the locations of which are made known to or should be known by the Contractor. The Contractor shall repair any damage to those facilities, including those that are the property of a third party, resulting from failure to comply with the requirements of this contract or failure to exercise reasonable care in performing the work. If the Contractor fails or refuses to repair the damage promptly, the Contracting Officer may have the necessary work performed and charge the cost to the Contractor.

55. Operations and Storage Areas (FAR 52.236-10, Apr 1984)

A. The Contractor shall confine all operations (including storage of materials) on Government premises to areas authorized or approved by the Contracting Officer. The Contractor shall hold and save the Government, its officers and agents, free and harmless from liability of any nature occasioned by the Contractor's performance.

B. Temporary buildings (*e.g.,* storage sheds, shops, offices) and utilities may be erected by the Contractor only with the approval of the Contracting Officer and shall be built with labor and materials furnished by the Contractor without expense to the Government. The temporary buildings and utilities shall remain the property of the Contractor and shall be removed by the Contractor at its expense upon completion of the work. With the written consent of the Contracting Officer, the buildings and utilities may be abandoned and need not be removed.

C. The Contractor shall, under regulations prescribed by the Contracting Officer, use only established roadways, or use temporary roadways constructed by the Contractor when and as authorized by the Contracting Officer. When materials are transported in prosecuting the work, vehicles shall not be loaded beyond the loading capacity recommended by the manufacturer of the vehicle or prescribed by any Federal, State, or local law or regulation. When it is necessary to cross curbs or sidewalks, the Contractor shall protect them from damage. The Contractor shall repair or pay for the repair of any damaged curbs, sidewalks, or roads.

56. Use and Possession Prior to Completion (FAR 52.236-11, Apr 1984)

A. The Government shall have the right to take possession of or use any completed or partially completed part of the work. Before taking possession of or using any work, the Contracting Officer shall furnish the Contractor a list of items of work remaining to be performed or corrected on those portions of the work that the Government intends to take possession of or use. However, failure of the Contracting Officer to list any item of work shall not relieve the Contractor of responsibility for complying with the terms of the contract. The Government's possession or use shall not be deemed an acceptance of any work under the contract.

B. While the Government has such possession or use, the Contractor shall be relieved of the responsibility for the loss of or damage to the work resulting from the Government's possession or use, notwithstanding the terms of the clause in this contract entitled "Permits and Responsibilities." If prior possession or use by the Government delays the progress of the work or causes additional expense to the Contractor, an equitable adjustment shall be made in the contract price or the time of completion, and the contract shall be modified in writing accordingly.

57. Cleaning Up (FAR 52.236-12Apr 1984)

The Contractor shall at all times keep the work area, including storage areas, free from accumulations of waste materials. Before completing the work, the Contractor shall remove from the work and premises any rubbish, tools, scaffolding, equipment, and materials that are not the property of the Government. Upon completing the work, the Contractor shall leave the work area in a clean, neat, and orderly condition satisfactory to the Contracting Officer.

58. Availability and Use of Utility Services (FAR 52.236-14, Apr 1984)

A. The Government shall make all reasonably required

amounts of utilities available to the Contractor from existing outlets and supplies, as specified in the contract. Unless otherwise provided in the contract, the amount of each utility service consumed shall be charged to or paid for by the Contractor at prevailing rates charged to the Government or, where the utility is produced by the Government, at reasonable rates determined by the Contracting Officer. The Contractor shall carefully conserve any utilities furnished without charge.

B. The Contractor, at its expense and in a workmanlike manner satisfactory to the Contracting Officer, shall install and maintain all necessary temporary connections and distribution lines, and all meters required to measure the amount of each utility used for the purpose of determining charges. Before final acceptance of the work by the Government, the Contractor shall remove all the temporary connections, distribution lines, meters, and associated paraphernalia.

59. Schedules for Construction Contracts (FAR 52.236-15, Apr 1984)

A. The Contractor shall, within five days after the work commences on the contract or another period of time determined by the Contracting Officer, prepare and submit to the Contracting Officer for approval three copies of a practicable schedule showing the order in which the Contractor proposes to perform the work, and the dates on which the Contractor contemplates starting and completing the several salient features of the work (including acquiring materials, plant, and equipment). The schedule shall be in the form of a progress chart of suitable scale to indicate appropriately the percentage of work scheduled for completion by any given date during the period. If the Contractor fails to submit a schedule within the time prescribed, the Contracting Officer may withhold approval of progress payments until the Contractor submits the required schedule.

B. The Contractor shall enter the actual progress on the chart as directed by the Contracting Officer, and upon doing so shall immediately deliver three copies of the annotated schedule to the Contracting Officer. If, in the opinion of the Contracting Officer, the Contractor falls behind the approved schedule, the Contractor shall take steps necessary to improve its progress, including those that may be required by the Contracting Officer, without additional cost to the Government. In this circumstance, the Contracting Officer may require the Contractor to increase the number of shifts, overtime operations, days of work, and/or the amount of construction plant, and to submit for approval any supplementary schedule or schedules in chart form as the Contracting Officer deems necessary to demonstrate how the approved rate of progress will be regained.

C. Failure of the Contractor to comply with the requirements of the Contracting Officer under this clause shall be grounds for a determination by the Contracting Officer that the Contractor is not prosecuting the work with sufficient diligence to ensure completion within the time specified in the contract. Upon making this determination, the Contracting Officer may terminate the Contractor's right to proceed with the work, or any separable part of it, in accordance with the default terms of this contract.

60. Layout of Work (FAR 52.236-17, Apr 1984)

The Contractor shall lay out its work from Government established base lines and bench marks indicated on the drawings, and shall be responsible for all measurements in connection with the layout. The Contractor shall furnish, at its own expense, all stakes, templates, platforms, equipment, tools, materials, and labor required to lay out any part of the work. The Contractor shall be responsible for executing the work to the lines and grades that may be established or indicated by the Contracting Officer. The Contractor shall also be responsible for maintaining and preserving all stakes and other marks established by the Contracting Officer until authorized to remove them. If such marks are destroyed by the Contractor or through its negligence before their removal is authorized, the Contracting Officer may replace them and deduct the expense of the replacement from any amounts due or to become due to the Contractor.

61. Organization and Direction of the Work (FAR 52.236-19, Apr 1984)

A. When this contract is executed, the Contractor shall submit to the Contracting Officer a chart showing the general executive and administrative organization, the personnel to be employed in connection with the work under this contract, and their respective duties. The Contractor shall keep the data furnished current by supplementing it as additional information becomes available.

B. Work performance under this contract shall be under the full-time resident direction of (1) the Contractor, if the Contractor is an individual; (2) one or more principal partners, if the Contractor is a partnership; or (3) one or more senior officers, if Contractor is a corporation, association, or similar legal entity. However, if the Contracting Officer approves, the Contractor may be represented in the direction of the work by a specific person or persons holding positions other than those identified in this paragraph.

62. Specifications and Drawings for Construction (FAR 52.236-21, Feb 1997)

A. The Contractor shall keep on the work site a copy of the drawings and specifications and shall at all times give the Contracting Officer access thereto. Anything mentioned in the specifications and not shown on the drawings, or shown on the drawings and not mentioned in the specifications, shall be of like effect as if shown or mentioned in both. In case of difference between drawings and specifications, the specifications shall govern. In case of discrepancy in the figures, in the drawings, or in the specifications, the matter shall be promptly submitted to the Contracting Officer, who shall promptly make a determination in writing. Any adjustment by the Contractor without such a determination shall be at its own risk and expense. The Contracting Officer shall furnish from time to time such detailed drawings and other information as considered necessary, unless otherwise provided.

B. Wherever in the specifications or upon the drawings the words "directed," "required," "ordered," "designated," "prescribed," or words of like import are used, it shall be understood that the "direction," "requirement," "order," "designation," or

"prescription," of the Contracting Officer is intended and similarly the words "approved," "acceptable," "satisfactory," or words of like import shall mean "approved by," or "acceptable to," or "satisfactory to" the Contracting Officer, unless otherwise expressly stated.

C. Where "as shown," "as indicated," "as detailed," or words of similar import are used, it shall be understood that the reference is made to the drawings accompanying this contract unless stated otherwise. The word "provided" as used herein shall be understood to mean "provide complete in place," that is "furnished and installed."

D. Shop drawings means drawings, submitted to the Government by the Contractor, subcontractor, or any lower tier subcontractor pursuant to a construction contract, showing in detail (1) the proposed fabrication and assembly of structural elements, and (2) the installation (*i.e.,* fit, and attachment details) of materials or equipment. It includes drawings, diagrams, layouts, schematics, descriptive literature, illustrations, schedules, performance and test data, and similar materials furnished by the contractor to explain in detail specific portions of the work required by the contract. The Government may duplicate, use, and disclose in any manner and for any purpose shop drawings delivered under this contract.

E. If this contract requires shop drawings, the Contractor shall coordinate all such drawings, and review them for accuracy, completeness, and compliance with contract requirements and shall indicate its approval thereon as evidence of such coordination and review. Shop drawings submitted to the Contracting Officer without evidence of the Contractor's approval may be returned for resubmission. The Contracting Officer will indicate an approval or disapproval of the shop drawings and if not approved as submitted shall indicate the Government's reasons therefor. Any work done before such approval shall be at the Contractor's risk. Approval by the Contracting Officer shall not relieve the Contractor from responsibility for any errors or omissions in such drawings, nor from responsibility for complying with the requirements of this contract, except with respect to variations described and approved in accordance with (f) of this clause.

F. If shop drawings show variations from the contract requirements, the Contractor shall describe such variations in writing, separate from the drawings, at the time of submission. If the Contracting Officer approves any such variation, the Contracting Officer shall issue an appropriate contract modification, except that, if the variation is minor or does not involve a change in price or in time of performance, a modification need not be issued.

G. The Contractor shall submit to the Contracting Officer for approval four copies (unless otherwise indicated) of all shop drawings as called for under the various headings of these specifications. Three sets (unless otherwise indicated) of all shop drawings, will be retained by the Contracting Officer and one set will be returned to the Contractor. Upon completing the work under this contract, the Contractor shall furnish a complete set of all shop drawings as finally approved. These drawings shall show all changes and revisions made up to the time the equipment is completed and accepted.

63. Back-Charges

A. When costs are sustained by Battelle or the Government as a result of Contractor failure in whole or in part to execute its responsibility under the terms of this Agreement, such costs are considered the responsibility of the Contractor and will be "back-charged." Contractor actions having potential to result in back-charges include:

1. Environmental, safety, health, or quality assurance violations;
2. Rework necessary to meet Contract requirements;
3. Support of Contractor's recovery schedule;
4. Inspections by Battelle not performed, as scheduled, due to incomplete or inadequate status of the work for which Contractor is at fault;
5. Inspections that must be repeated by Battelle due to errors, omissions, mismanagement or any fault of Contractor;
6. Vendor data review and processing as a result of re-submittals in excess of three (3), which are attributable to inadequate Contractor coordination or preparation;
7. Contractor's failure to restore all Battelle and/or Government-owned property, facilities, utilities, or systems, including replacement of survey stakes, to "like-for-like" condition after use or damage by Contractor;
8. Contractor's failure to adequately repair and/or replace property of a third party damaged by Subcontractor;
9. Subcontractor's failure to maintain the cleanliness and orderly arrangement of the work site during construction and at final acceptance, within reason, to the satisfaction of Contractor;
10. Subcontractor's failure to return or transfer to another project all security badges will result in a charge to the Subcontractor in the amount of $250.00 per badge; and
11. Hazardous or environmentally detrimental spills caused by Subcontractor with clean-up performed by Contractor will be charged to Subcontractor.

B. Notification

Upon identification of an actual or anticipated back-charge, Battelle will provide Contractor a written notice which shall describe the work to be performed, the schedule for performance, and the cost to be charged the Contractor. The cost may include:

1. actual labor cost,
2. actual material cost including transportation, and
3. taxes, levies, duties and assessments.

C. Contractor Acceptance

Contractor is required to accept the back-charge or re-perform work at Contractor's cost. In the event Contractor

refuses to accept or agrees to performance of the work within 24 hours after receipt of Battelle's notice, Battelle may elect to proceed with the back-charge work and withhold (set-off) the cost from Contractor's payment. Battelle has the right to set-off such cost against any amount payable to the Contractor whether or not in connection with this Agreement.

64. Vendor Data Requirements

A. Contractor shall furnish to Battelle copies of required data for disposition sufficiently in advance of the date that the material/equipment is required to be installed to meet the accepted construction schedule. The Vendor Data Schedule (VDS) (also called a "submittal log") summarizes the submittal requirements of the Subcontract and generally specifies the timing for each required submittal. Vendor data for all material and equipment requiring a disposition shall be submitted, reviewed, assigned a disposition code by Battelle and returned to Contractor.

B. Contractor shall perform no work for which the vendor data has not been reviewed and dispositioned. Any delay caused by Contractor's failure to submit vendor data in a timely manner for Battelle review will not be excusable or compensable. If submitted vendor data items are unacceptable, no excusable delay shall accrue there from, regardless of the number of re-submittals made by Contractor or lower- tiers.

C. Battelle's vendor data disposition will not affect or relieve Contractor from responsibility for performance of work in compliance with the Contract. Vendor data causing any change to design details, layouts, calculations, analyses, test methods, procedures or any other Contract requirement shall be submitted with a written description of the affected change.

D. Contractor shall submit, concurrent with each invoice, an updated Construction Vendor Data Submittal Log (CVDSL). Failure to submit the CVDSL may result in withholding of payment until CVDSL receipt. Information provided on the CVDSL shall correlate with Contractor's accepted construction schedule to assure prosecution of the work in accordance with the said construction schedule. The CVDSL shall clearly indicate expected or actual submittal dates and the disposition status of all submitted data.

E. Substitutions require Battelle approval. Refer to the clause title "Brand Name or Equal."

F. Samples.

1. When samples are required, they shall be furnished at Contractor's expense in accordance with the clause entitled "Material and Workmanship." Samples shall be submitted within the time specified, or if no time is specified, within a reasonable time before use to permit inspection and testing. Samples shall be shipped prepaid, delivered as directed by Battelle, and shall be properly marked to show the name of the material, trademark of manufacturer, place of origin, number and name of work where the material represented by the sample will be used, and the name of the Contractor submitting the sample.

2. Samples not subject to destructive testing may be retained by Battelle until completion of the construction. If requested in writing by the Contractor at the time of submission, samples will be returned at Contractor's expense upon completion of the construction. Failure of any samples to pass specified requirements will be sufficient cause for refusal to consider further any samples from the same manufacturer whose materials failed to pass testing requirements.

65. Cooperation with Others

A. Contractor may undertake or award other subcontracts at or near the site of the work under the Subcontract. Subcontractor shall fully cooperate with the other Subcontractors and with Contractor employees and shall carefully adapt scheduling and performing the work under the Subcontract to accommodate the work by others, heeding any direction that may be provided by Contractor. Subcontractor shall not commit or permit any act that shall interfere with the performance of work by any other Subcontractor or Contractor employees.

B. Concurrent Work and Interface Responsibilities

1. When portions of the construction work under the Subcontract are performed near active operating areas, Subcontractor shall plan its construction work so as not to interfere with the operation of these facilities and shall maintain free and clear access to same for routine operational and maintenance activities performed by Contractor.

2. In addition, Subcontractor shall carefully coordinate all construction activities with Contractor so as to avoid conflicts and unnecessary delays in construction. Except for authorized shutdowns for the tie-in of newly constructed facilities, construction activities shall not disrupt normal operation of existing plant facilities.

LABOR STANDARDS

66. Davis-Bacon Act (FAR 52.222-6, July 2005)

A. Definition.—"Site of the work"—

1. Means—

(i). The primary site of the work. The physical place or places where the construction called for in the contract will remain when work on it is completed; and

(ii). The secondary site of the work, if any. Any other site where a significant portion of the building or work is constructed, provided that such site is—

a. Located in the United States; and

b. Established specifically for the performance of the contract or project;

2. Except as provided in paragraph (3) of this definition, includes any fabrication plants, mobile factories, batch plants, borrow pits, job headquarters, tool yards, etc., provided—

(i). They are dedicated exclusively, or nearly so, to performance of the contract or project; and

(ii). They are adjacent or virtually adjacent to the "primary site of the work" as defined in

paragraph (a)(1)(i), or the "secondary site of the work" as defined in paragraph (a)(1)(ii) of this definition;

3. Does not include permanent home offices, branch plant establishments, fabrication plants, or tool yards of a Contractor or subcontractor whose locations and continuance in operation are determined wholly without regard to a particular Federal contract or project. In addition, fabrication plants, batch plants, borrow pits, job headquarters, yards, etc., of a commercial or material supplier which are established by a supplier of materials for the project before opening of bids and not on the Project site, are not included in the "site of the work." Such permanent, previously established facilities are not a part of the "site of the work" even if the operations for a period of time may be dedicated exclusively or nearly so, to the performance of a contract.

B. (1) All laborers and mechanics employed or working upon the site of the work will be paid unconditionally and not less often than once a week, and without subsequent deduction or rebate on any account (except such payroll deductions as are permitted by regulations issued by the Secretary of Labor under the Copeland Act (29 CFR part 3)), the full amount of wages and bona fide fringe benefits (or cash equivalents thereof) due at time of payment computed at rates not less than those contained in the wage determination of the Secretary of Labor which is attached hereto and made a part hereof, or as may be incorporated for a secondary site of the work, regardless of any contractual relationship which may be alleged to exist between the Contractor and such laborers and mechanics. Any wage determination incorporated for a secondary site of the work shall be effective from the first day on which work under the contract was performed at that site and shall be incorporated without any adjustment in contract price or estimated cost. Laborers employed by the construction Contractor or construction subcontractor that are transporting portions of the building or work between the secondary site of the work and the primary site of the work shall be paid in accordance with the wage determination applicable to the primary site of the work.

(2) Contributions made or costs reasonably anticipated for bona fide fringe benefits under section 1(b)(2) of the Davis-Bacon Act on behalf of laborers or mechanics are considered wages paid to such laborers or mechanics, subject to the provisions of paragraph (e) of this clause; also, regular contributions made or costs incurred for more than a weekly period (but not less often than quarterly) under plans, funds, or programs which cover the particular weekly period, are deemed to be constructively made or incurred during such period.

(3) Such laborers and mechanics shall be paid not less than the appropriate wage rate and fringe benefits in the wage determination for the classification of work actually performed, without regard to skill, except as provided in the clause entitled Apprentices and Trainees. Laborers or mechanics performing work in more than one classification may be compensated at the rate specified for each classification for the time actually worked therein; provided that the employer's payroll records accurately set forth the time spent in each classification in which work is performed.

(4) The wage determination (including any additional classifications and wage rates conformed under paragraph (c) of this clause) and the Davis-Bacon poster (WH-1321) shall be posted at all times by the Contractor and its subcontractors at the primary site of the work and the secondary site of the work, if any, in a prominent and accessible place where it can be easily seen by the workers.

C. (1) The Contracting Officer shall require that any class of laborers or mechanics which is not listed in the wage determination and which is to be employed under the contract shall be classified in conformance with the wage determination. The Contracting Officer shall approve an additional classification and wage rate and fringe benefits therefor only when all the following criteria have been met:

(i). The work to be performed by the classification requested is not performed by a classification in the wage determination.

(ii). The classification is utilized in the area by the construction industry.

(iii). The proposed wage rate, including any bona fide fringe benefits, bears a reasonable relationship to the wage rates contained in the wage determination.

(2) If the Contractor and the laborers and mechanics to be employed in the classification (if known), or their representatives, and the Contracting Officer agree on the classification and wage rate (including the amount designated for fringe benefits, where appropriate), a report of the action taken shall be sent by the Contracting Officer to the Administrator of the:

Wage and Hour Division
Employment Standards Administration
U.S. Department of Labor
Washington, DC 20210

The Administrator or an authorized representative will approve, modify, or disapprove every additional classification action within 30 days of receipt and so advise the Contracting Officer or will notify the Contracting Officer within the 30-day period that additional time is necessary.

(3) In the event the Contractor, the laborers or mechanics to be employed in the classification, or their representatives, and the Contracting Officer do not agree on the proposed classification and wage rate (including the amount designated for fringe benefits, where appropriate), the Contracting Officer shall refer the questions, including the views of all interested parties and the recommendation of the Contracting Officer, to the Administrator of the Wage and Hour Division for determination. The Administrator, or an authorized representative, will issue a determination within 30 days of receipt and so advise the Contracting Officer or will notify the Contracting Officer within the 30-day period that additional time is necessary.

(4) The wage rate (including fringe benefits, where appropriate) determined pursuant to paragraphs (c)(2) and (c)(3) of this clause shall be paid to all workers performing work in the classification under this contract from the first day on which work is performed in the classification.

D. Whenever the minimum wage rate prescribed in the contract for a class of laborers or mechanics includes a fringe benefit which is not expressed as an hourly rate, the Contractor shall either pay the benefit as stated in the wage determination or shall pay another bona fide fringe benefit or an hourly cash equivalent thereof.

E. If the Contractor does not make payments to a trustee or other third person, the Contractor may consider as part of the wages of any laborer or mechanic the amount of any costs reasonably anticipated in providing bona fide fringe benefits under a plan or program; provided, That the Secretary of Labor has found, upon the written request of the Contractor, that the applicable standards of the Davis-Bacon Act have been met. The Secretary of Labor may require the Contractor to set aside in a separate account assets for the meeting of obligations under the plan or program.

67. Withholding of Funds (FAR 52.222-7, Feb 1988)

The Contracting Officer shall, upon his or her own action or upon written request of an authorized representative of the Department of Labor, withhold or cause to be withheld from the Contractor under this contract or any other Federal contract with the same Prime Contractor, or any other federally assisted contract subject to Davis-Bacon prevailing wage requirements, which is held by the same Prime Contractor, so much of the accrued payments or advances as may be considered necessary to pay laborers and mechanics, including apprentices, trainees, and helpers, employed by the Contractor or any subcontractor the full amount of wages required by the contract. In the event of failure to pay any laborer or mechanic, including any apprentice, trainee, or helper, employed or working on the site of the work, all or part of the wages required by the contract, the Contracting Officer may, after written notice to the Contractor, take such action as may be necessary to cause the suspension of any further payment, advance, or guarantee of funds until such violations have ceased.

68. Payrolls and Basic Records (FAR 52.222-8, June 2010)

A. Payrolls and basic records relating thereto shall be maintained by the Contractor during the course of the work and preserved for a period of 3 years thereafter for all laborers and mechanics working at the site of the work. Such records shall contain the name, address, and social security number of each such worker, his or her correct classification, hourly rates of wages paid (including rates of contributions or costs anticipated for bona fide fringe benefits or cash equivalents thereof of the types described in section 1(b)(2)(B) of the Davis-Bacon Act), daily and weekly number of hours worked, deductions made, and actual wages paid. Whenever the Secretary of Labor has found, under paragraph (d) of the clause entitled Davis-Bacon Act, that the wages of any laborer or mechanic include the amount of any costs reasonably anticipated in providing benefits under a plan or program described in section 1(b)(2)(B) of the Davis-Bacon Act, the Contractor shall maintain records which show that the commitment to provide such benefits is enforceable, that the plan or program is financially responsible, and that the plan or program has been communicated in writing to the laborers or mechanics affected, and records which show the costs anticipated or the actual cost incurred in providing such benefits. Contractors employing apprentices or trainees under approved programs shall maintain written evidence of the registration of apprenticeship programs and certification of trainee programs, the registration of the apprentices and trainees, and the ratios and wage rates prescribed in the applicable programs.

B. (1) The Contractor shall submit weekly for each week in which any contract work is performed a copy of all payrolls to the Contracting Officer. The payrolls submitted shall set out accurately and completely all of the information required to be maintained under paragraph (a) of this clause, except that full social security numbers and home addresses shall not be included on weekly transmittals. Instead the payrolls shall only need to include an individually identifying number for each employee (e.g., the last four digits of the employee's social security number). The required weekly payroll information may be submitted in any form desired. Optional Form WH-347 is available for this purpose and may be obtained from the U.S. Department of Labor Wage and Hour Division website at http://www.dol.gov/whd/forms/wh347.pdf. The Prime Contractor is responsible for the submission of copies of payrolls by all subcontractors. Contractors and subcontractors shall maintain the full social security number and current address of each covered worker, and shall provide them upon request to the Contracting Officer, the Contractor, or the Wage and Hour Division of the Department of Labor for purposes of an investigation or audit of compliance with prevailing wage requirements. It is not a violation of this section for a Prime Contractor to require a subcontractor to provide addresses and social security numbers to the Prime Contractor for its own records, without weekly submission to the Contracting Officer.

2. Each payroll submitted shall be accompanied by a "Statement of Compliance," signed by the Contractor or subcontractor or his or her agent who pays or supervises the payment of the persons employed under the contract and shall certify—

(i). That the payroll for the payroll period contains the information required to be maintained under paragraph (a) of this clause and that such information is correct and complete;

(ii). That each laborer or mechanic (including each helper, apprentice, and trainee) employed on the contract during the payroll period has been paid the full weekly wages earned, without rebate, either directly or indirectly, and that no deductions have been made either directly or indirectly from the full wages earned, other than permissible deductions as set forth in the Regulations, 29 CFR Part 3; and

(iii). That each laborer or mechanic has been paid not less than the applicable wage rates and fringe benefits or cash equivalents for the classification of work performed, as specified in the applicable wage determination incorporated into the contract.

3. The weekly submission of a properly executed certification set forth on the reverse side of Optional Form WH-347 shall satisfy the requirement for submission of the "Statement of Compliance" required by paragraph (b)(2) of this clause.

4. The falsification of any of the certifications in this clause may subject the Contractor or subcontractor to civil or criminal prosecution under Section 1001 of Title 18 and Section 3729 of Title 31 of the United States Code.

C. The Contractor or subcontractor shall make the records required under paragraph (a) of this clause available for inspection, copying, or transcription by the Contracting Officer or authorized representatives of the Contracting Officer or the Department of Labor. The Contractor or subcontractor shall permit the Contracting Officer or representatives of the Contracting Officer or the Department of Labor to interview employees during working hours on the job. If the Contractor or subcontractor fails to submit required records or to make them available, the Contracting Officer may, after written notice to the Contractor, take such action as may be necessary to cause the suspension of any further payment. Furthermore, failure to submit the required records upon request or to make such records available may be grounds for debarment action pursuant to 29 CFR 5.12.

69. Apprentices and Trainees (FAR 52.222-9, July 2005)

A. Apprentices.

1. An apprentice will be permitted to work at less than the predetermined rate for the work performed when employed—

A. Pursuant to and individually registered in a bona fide apprenticeship program registered with the U.S. Department of Labor, Employment and Training Administration, Office of Apprenticeship Training, Employer, and Labor Services (OATELS) or with a State Apprenticeship Agency recognized by the OATELS; or

B. In the first 90 days of probationary employment as an apprentice in such an apprenticeship program, even though not individually registered in the program, if certified by the OATELS or a State Apprenticeship Agency (where appropriate) to be eligible for probationary employment as an apprentice.

2. The allowable ratio of apprentices to journeymen on the job site in any craft classification shall not be greater than the ratio permitted to the Contractor as to the entire work force under the registered program.

3. Any worker listed on a payroll at an apprentice wage rate, who is not registered or otherwise employed as stated in paragraph (a)(1) of this clause, shall be paid not less than the applicable wage determination for the classification of work actually performed. In addition, any apprentice performing work on the job site in excess of the ratio permitted under the registered program shall be paid not less than the applicable wage rate on the wage determination for the work actually performed.

4. Where a Contractor is performing construction on a project in a locality other than that in which its program is registered, the ratios and wage rates (expressed in percentages of the journeyman's hourly rate) specified in the Contractor's or subcontractor's registered program shall be observed. Every apprentice must be paid at not less than the rate specified in the registered program for the apprentice's level of progress, expressed as a percentage of the journeyman hourly rate specified in the applicable wage determination.

5. Apprentices shall be paid fringe benefits in accordance with the provisions of the apprenticeship program. If the apprenticeship program does not specify fringe benefits, apprentices must be paid the full amount of fringe benefits listed on the wage determination for the applicable classification. If the Administrator determines that a different practice prevails for the applicable apprentice classification, fringes shall be paid in accordance with that determination.

6. In the event OATELS, or a State Apprenticeship Agency recognized by OATELS, withdraws approval of an apprenticeship program, the Contractor will no longer be permitted to utilize apprentices at less than the applicable predetermined rate for the work performed until an acceptable program is approved.

B. Trainees.

1. Except as provided in 29 CFR 5.16, trainees will not be permitted to work at less than the predetermined rate for the work performed unless they are employed pursuant to and individually registered in a program which has received prior approval, evidenced by formal certification by the U.S. Department of Labor, Employment and Training Administration, Office of Apprenticeship Training, Employer, and Labor Services (OATELS). The ratio of trainees to journeymen on the job site shall not be greater than permitted under the plan approved by OATELS.

2. Every trainee must be paid at not less than the rate specified in the approved program for the trainee's level of progress, expressed as a percentage of the journeyman hourly rate specified in the applicable wage determination. Trainees shall be paid fringe benefits in accordance with the provisions of the trainee program. If the trainee program does not mention fringe benefits, trainees shall be paid the full amount of fringe benefits listed in the wage determination unless the Administrator of the Wage and Hour Division determines that there is

an apprenticeship program associated with the corresponding journeyman wage rate in the wage determination which provides for less than full fringe benefits for apprentices. Any employee listed on the payroll at a trainee rate who is not registered and participating in a training plan approved by the OATELS shall be paid not less than the applicable wage rate in the wage determination for the classification of work actually performed. In addition, any trainee performing work on the job site in excess of the ratio permitted under the registered program shall be paid not less than the applicable wage rate in the wage determination for the work actually performed.

3. In the event OATELS withdraws approval of a training program, the Contractor will no longer be permitted to utilize trainees at less than the applicable predetermined rate for the work performed until an acceptable program is approved.

C. Equal employment opportunity. The utilization of apprentices, trainees, and journeymen under this clause shall be in conformity with the equal employment opportunity requirements of Executive Order 11246, as amended, and 29 CFR Part 30.

70. Compliance with Copeland Act Requirements (FAR 52.222-10, Feb 1988)

The Contractor shall comply with the requirements of 29 CFR Part 3, which are hereby incorporated by reference in this contract.

71. Subcontracts (Labor Standards) (FAR 52.222-11, July 2005)

A. Definition. "Construction, alteration or repair," as used in this clause, means all types of work done by laborers and mechanics employed by the construction Contractor or construction subcontractor on a particular building or work at the site thereof, including without limitation—

1. Altering, remodeling, installation (if appropriate) on the site of the work of items fabricated off-site;
2. Painting and decorating;
3. Manufacturing or furnishing of materials, articles, supplies, or equipment on the site of the building or work;
4. Transportation of materials and supplies between the site of the work within the meaning of paragraphs (a)(1)(i) and (ii) of the "site of the work" as defined in the FAR clause at 52.222-6, Davis-Bacon Act of this contract, and a facility which is dedicated to the construction of the building or work and is deemed part of the site of the work within the meaning of paragraph (2) of the "site of work" definition; and
5. Transportation of portions of the building or work between a secondary site where a significant portion of the building or work is constructed, which is part of the "site of the work" definition in paragraph (a)(1)(ii) of the FAR clause at 52.222-6, Davis-Bacon Act, and the physical place or places where the building or work will remain (paragraph (a)(1)(i) of the FAR clause at 52.222-6, in the "site of the work" definition).

B. The Contractor shall insert in any subcontracts for construction, alterations and repairs within the United States the clauses entitled—

1. Davis-Bacon Act;
2. Contract Work Hours and Safety Standards Act—Overtime Compensation (if the clause is included in this contract);
3. Apprentices and Trainees;
4. Payrolls and Basic Records;
5. Compliance with Copeland Act Requirements;
6. Withholding of Funds;
7. Subcontracts (Labor Standards);
8. Contract Termination—Debarment;
9. Disputes Concerning Labor Standards;
10. Compliance with Davis-Bacon and Related Act Regulations; and
11. Certification of Eligibility.

C. The prime Contractor shall be responsible for compliance by any subcontractor or lower tier subcontractor performing construction within the United States with all the contract clauses cited in paragraph (b).

D. (1) Within 14 days after award of the contract, the Contractor shall deliver to the Contracting Officer a completed Standard Form (SF) 1413, Statement and Acknowledgment, for each subcontract for construction within the United States, including the subcontractor's signed and dated acknowledgment that the clauses set forth in paragraph (b) of this clause have been included in the subcontract.

2. Within 14 days after the award of any subsequently awarded subcontract the Contractor shall deliver to the Contracting Officer an updated completed SF 1413 for such additional subcontract.

E. The Contractor shall insert the substance of this clause, including this paragraph (e) in all subcontracts for construction within the United States.

72. Contract Termination—Debarment (FAR 52.222-12, Feb 1988)

A breach of the contract clauses entitled Davis-Bacon Act, Contract Work Hours and Safety Standards Act—Overtime Compensation, Apprentices and Trainees, Payrolls and Basic Records, Compliance with Copeland Act Requirements, Subcontracts (Labor Standards), Compliance with Davis-Bacon and Related Act Regulations, or Certification of Eligibility may be grounds for termination of the contract, and for debarment as a Contractor and subcontractor as provided in 29 CFR 5.12.

73. Compliance with Davis-Bacon and Related Act Regulations (FAR 52.222-13, Feb 1988)

All rulings and interpretations of the Davis-Bacon and Related Acts contained in 29 CFR parts 1, 3, and 5 are hereby incorporated by reference in this contract.

74. Disputes Concerning Labor Standards (FAR 52.222-14, Feb 1988)

The United States Department of Labor has set forth in 29 CFR parts 5, 6, and 7 procedures for resolving disputes concerning labor standards requirements. Such disputes shall be resolved in accordance with those procedures and not the Disputes clause of this contract. Disputes within the meaning of this clause include disputes between the Contractor (or any of its subcontractors) and the contracting agency, the U.S. Department of Labor, or the employees or their representatives.

75. Notice of Labor Disputes (cl. 359 - Feb 1997)

If the Contractor has knowledge that any actual or potential labor dispute is delaying or threatens to delay the timely performance of this contract, the Contractor shall immediately give notice, including all relevant information, to the Battelle Contracts Representative.

76. Certification of Eligibility (FAR 52.222-15, Feb 1988)

A. By entering into this contract, the Contractor certifies that neither it (nor he or she) nor any person or firm who has an interest in the Contractor's firm is a person or firm ineligible to be awarded Government contracts by virtue of section 3(a) of the Davis-Bacon Act or 29 CFR 5.12(a)(1).

B. No part of this contract shall be subcontracted to any person or firm ineligible for award of a Government contract by virtue of section 3(a) of the Davis-Bacon Act or 29 CFR 5.12(a)(1).

C. The penalty for making false statements is prescribed in the U.S. Criminal Code, 18 U.S.C. 1001.

CLAUSES INCORPORATED BY REFERENCE

This Contract incorporates one or more FAR and DEAR provisions/clauses by reference with the same force and effect as if they were given in full text. Such provisions/clauses are identified below and elsewhere in this Contract by their title, effective date, and reference where they appear in the FAR and/or DEAR. The FAR and DEAR may be obtained from the Superintendent of Documents, US Government Printing Office and is available for viewing/downloading at http://www.acquisition.gov/far/ and http://farsite.hill.af.mil.

A. Applicable to all Contracts:

1. FAR 52.223-3, Hazardous Material Identification and Material Safety Data (JAN 1997) (Alt I, JUL 1995)
2. DEAR 952.211-71, Priorities and Allocations (APR 2008)
3. FAR 52.204-9 Personal Identity Verification of Contractor Personnel (JAN 2011)
4. FAR 52.227-4, Patent Indemnity—Construction Contracts (DEC 2007)
5. FAR 52.247-64, Preference For Privately Owned U.S.-Flag Commercial Vessels (FEB 2006)
6. DEAR 952.204-71 Sensitive Foreign Nations Control (MAR 2011)
7. DEAR 952.217-70 Acquisition of Real Property (Apr 1984)

B. Applicable to Subcontracts Under This Contract For Commercial Items:

1. FAR 52.244-6, Subcontracts For Commercial Items (DEC 2010)
2. FAR 52.222-50 Combating Trafficking in Persons (FEB 2009)
3. FAR 52.223-15 Energy Efficiency in Energy-Consuming Products (DEC 2007)

C. Applicable if Contract identifies specific items to be accorded duty-free entry into a customs territory of the United States. Also applicable where other foreign supplies in excess of $15,000 may be imported to a customs territory of the United States.

1. FAR 52.225-8, Duty-Free Entry (OCT 2010)

D. Applicable if Contract exceeds $2,500:

1. FAR 52.225-9, Buy American Act—Construction Materials (FEB 2009)

   (Note: The fill-in for paragraph (b) (2) of this clause is "None.")

2. FAR 52.225-13, Restrictions on Certain Foreign Purchases (JUNE 2008)

E. Applicable if Contract Exceeds $3,000:

1. FAR 52.222-54, Employment Eligibility Verification (Jan 2009) – applies for (a) commercial or noncommercial services (except for commercial services that are part of the purchase of a COTS item (or an item that would be a COTS item, but for minor modifications), performed by the COTS provider, and are normally provided for that COTS item) and (b) construction services; only applies for work performed in the United States.

F. Applicable if Contract exceeds $10,000:

1. FAR 52.222-21, Prohibition of Segregated Facilities (FEB 1999)
2. FAR 52.222-23, Notice of Requirement for Affirmative Action to Ensure Equal Employment Opportunity for Construction (FEB 1999) (The term "Covered Area" referred to in this FAR clause includes the Missouri Counties of Clay, Platte, Jackson, Ray, and Cass; and the Kansas Counties of Wyandotte and Johnson. Goals for minority and female participation in each trade are 12.7% and 6.9%, respectively.)
3. FAR 52.222-26, Equal Opportunity (MAR 2007) - The Equal Employment Opportunity Act Poster referenced in paragraph (c)(3)of the above clause may be downloaded from the U.S. Department of Labor website at www.dol.gov/elaws/posters.htm
4. FAR 52.222-27, Affirmative Action Compliance Requirements for Construction (FEB 1999)

G. Applicable if Contract exceeds $15,000:

1. FAR 52.222-36, Affirmative Action for Workers with Disabilities (OCT 2010)

H. Applicable if Contract exceeds $30,000:

1. FAR 52.209-6 Protecting the Government's Interest When Subcontracting with Contractors Debarred, Suspended, or Proposed for Debarment (Dec 2010)

I. Applicable if Contract exceeds $100,000:

1. FAR 52.222-35, Equal Opportunity for Special Disabled Veterans, Veterans of the Vietnam Era, and Other Eligible Veterans (SEP 2010)
2. FAR 52.222-37, Employment Reports on Special Disabled Veterans, Veterans of the Vietnam Era, and Other Eligible Veterans (SEP 2010)
3. DEAR 970.5227-5, Notice and Assistance Regarding Patent and Copyright Infringement (AUG 2002)

J. Applicable if Contract exceeds $150,000:

1. FAR 52.203-6, Restrictions on Subcontractor Sales to the Government (SEP 2006)
2. FAR 52.203-7, Anti-Kickback Procedures, (OCT 2010) – excluding paragraph (c)(1)
3. FAR 52.219-8, Utilization of Small Business Concerns (JAN 2011)
4. FAR 52.227-1, Authorization and Consent (DEC 2007) – applies without Alternate I if this Contract is for supplies or services, including construction, architect-engineer services, and materials, supplies, models, samples, and design or testing services.

K. Applicable if Contract exceeds $100,000 and its performance involves international air transportation of personnel, including their personal effects or property.

1. FAR 52.247-63, Preference for U.S.-Flag Air Carriers (JUN 2003)

L. Applicable if Contract exceeds $150,000 unless exempt per the provisions of FAR 22.305:

1. FAR 52.222-4, Contract Work Hours and Safety Standards Act--Overtime Compensation (JUL 2005)

M. Applicable if Contractor, as a part of its' quote or proposal, submitted the certification entitled "Certification of Toxic Chemical Release Reporting," and the amount of this Contract, inclusive of option amounts, exceeds $100,000:

1. FAR 52.223-14, Toxic Chemical Release Reporting (AUG 2003)

N. Applicable If Work Is Performed On DOE Site:

1. DEAR 970.5223-1, Integration of Environment, Safety, and Health into Work Planning and Execution (DEC 2000)
2. DEAR 970.5223-4, Workplace Substance Abuse Programs at DOE Sites, (DEC 2010)
3. DEAR 952.203-70, Whistleblower Protection For Contractor Employees (DEC 2000)

O. Applicable if work is performed on DOE site or if Contractor or its Subcontractors have access to classified information:

1. DEAR 952.204-2, Security (AUG 2009)
2. DEAR 952.204-70, Classification/Declassification (SEP 1997)
3. DEAR 952.204-73, Facility Clearance (MAY 2002)

P. Applicable if this Contract exceeds $150,000 and is for advisory and assistance services as those terms are defined at FAR 37.201:

1. DEAR 952.209-72, Organizational Conflicts of Interest, Alt. I, (AUG 2009)

Q. Applicable if this Contract exceeds $500,000:

1. DEAR 952.226-74 Displaced Employee Hiring Preference (JUN 1997)
2. DEAR 970.5226-2, Workforce Restructuring Under Section 3161 of the National Defense Authorization Act for Fiscal Year 1993 (DEC 2000)

R. Applicable if this Contract exceeds $650,000:

1. FAR 52.219-9, Small Business Subcontracting Plan (JAN 2011) – applies if the Contractor is a large business concern

S. Applicable to Contracts which require printing (as that term is defined in Title I of the U.S. Government Printing Regulations):

1. DEAR 970.5208-1, Printing (DEC 2000)

T. Applicable if this Contract involves the design, development, or operation of a system of records on individuals to accomplish a DOE function per the requirements of FAR 24.1:

1. FAR 52.224-1, Privacy Act Notification (APR 1984)
2. FAR 52.224-2, Privacy Act (APR 1984)

U. Applicable if Battelle requires a Certificate of Current Cost or Pricing Data in connection with the initial award or subsequent modification of this Contract pursuant to the requirements of FAR 15.403-1 through 15.403-5:

1. FAR 52.215-10, Price Reduction for Defective Cost or Pricing Data (AUG 2011)
2. FAR 52.215-11, Price Reduction for Defective Cost or Pricing Data—Modifications (AUG 2011)
3. FAR 52.215-12, Subcontractor Cost or Pricing Data (OCT 2010)
4. FAR 52.215-13, Subcontractor Cost or Pricing Data—Modifications (OCT 2010)

V. Applicable if costs incurred are a factor in determining the amount payable to Contractor under this Contract, or if the Contractor furnished Battelle a Certificate of Current Cost or Pricing Data as specified above:

1. DEAR 970.5232-3, Accounts, Records, and Inspection (DEC 2010)

W. Applicable if Battelle furnishes Government property to the Contractor in the performance of this purchase order/Contract, including Contractor acquired property to which title vests in the government under this purchase order/Contract:

1. FAR 52.245-1, Government Property (AUG 2010)

X. Applicable if royalties exceeding $250 were included in the price of this Contract:

1. DEAR 970.5227-8, Refund of Royalties (AUG 2002)

Y. Applicable if foreign travel is required in the performance of this Contract.

1. DEAR 952.247-70, Foreign Travel (AUG 2009)

Z. Applicable to all Contracts which include the design or operation of any plants or facilities or specially designed equipment for such plants or facilities.

1. DEAR 970.5227-1 Rights in Data – Facilities (DEC 2000) [included in Contracts for support services, involving the design or operation of any plants or facilities or specially designed equipment for such plants or facilities that are managed or operated under an M&O Contract under 48 CFR 970 with DOE.]

Environment, Safety, and Health Requirements – PNNL F&O Sponsored Work Sites (JPP/WEA/JSA) *(cl. 3113b – Feb. 2012)*

A. In performing any work under this contract on property or facilities owned or controlled by Battelle that are identified as PNNL Work Sites (hereinafter "onsite"), the Contractor shall comply with all applicable federal, state and local environment, safety, and health laws and regulations. The Contractor shall also comply with 10 CFR 851, DOE Worker Safety and Health Program, and DEAR 970.5223-1, Integration of Environment, Safety and Health (ES&H) into Work Planning and Execution (Dec. 2000). In order to comply with the requirements of 10 CFR 851 and DEAR 970.5223-1, the Contractor shall be guided by the principles set forth below.

B. The Contractor shall perform work safely and in a manner that ensures adequate protection for employees, the public, and the environment, and shall be accountable for the safe performance of work. The Contractor shall exercise a degree of care commensurate with the work and the associated hazards. The Contractor shall ensure that management of ES&H functions and activities becomes an integral but visible part of the Contractor's work planning and execution processes. The Contractor shall, in the performance of work, ensure that—

1. Line management is responsible for the protection of employees, public, and the environment. Line management includes those contractor and subcontractor employees managing and supervising employees performing work.
2. Clear and unambiguous lines of authority and responsibility for ensuring (ES&H) are established and maintained at all organizational levels.
3. Personnel possess the experience, knowledge, skills, and abilities that are necessary to discharge their responsibilities, and shall retain records respecting such competency and qualifications, making them available upon request.
4. Resources are effectively allocated to address ES&H, programmatic, and operational considerations. Protecting employees, the public, and the environment is a priority whenever activities are planned and performed.
5. Before work is performed, the associated hazards are evaluated and a set of ES&H standards and requirements are established which, if properly implemented, provide adequate assurance that employees, the public, and the environment are protected from adverse consequences.
6. Administrative and engineering controls to prevent and mitigate hazards are tailored to the work being performed and associated hazards. Emphasis should be on designing the work and/or controls to reduce or eliminate the hazards and to prevent accidents and unplanned releases and exposures.

C. The Contractor, relative to the Statement of Work and contract specifications, shall be able to demonstrate through documentation and work practices that its performance of work under this contract—

1. Fulfilled the scope of work as outlined in this contract
2. Identified and analyzed specific, task-level hazards associated with the work
3. Developed and implemented hazard controls related to the hazards
4. Allowed the performance of work within the controls
5. Provided feedback to Battelle and Contractor employees on adequacy of hazard controls

D. The Contractor shall perform work in accordance with a DOE-approved Worker Safety and Health Program (also referred to in the DEAR as a Safety Management Plan) as described below:

1. The Contractor shall demonstrate well-established safety protocols applicable to the scope of work and consistent with the required elements stated in this clause. Prior to the initiation of any onsite work, the Contractor shall either—
   a. Accept and incorporate Battelle's PNNL Contractor Environment Safety and Health Manual (http://www.pnl.gov/contracts/esh-procedures/) as its own. The Battelle Contracts Representative can provide a hard copy of the manual upon request. In those cases where the Contractor's onsite activities are limited to an office or meeting environment, with no additional or unusual hazards, the CES&H Manual requirements can be met through review of the Visitor Orientation Pamphlet, available on-line at http://www.pnl.gov/contracts/esh-procedures/.
   b. Submit its own 10 CFR 851 and DEAR 970.5223-1 compliant Worker Safety and Health Program (WSHP) document to the Battelle Contracts Representative. The Battelle Contracts Representative will coordinate the review and approval of the program document by DOE. The Contractor will be notified by the Battelle Contracts Representative of the program document's approval by DOE. Acceptance of the Contractor's program document will be at the sole discretion of DOE.
2. The Contractor will be provided a completed Job Planning Package (JPP) and Workplace Exposure Assessment (WEA) in the Invitation for Bid (IFB) or Request for Proposal (RFP). The completed JPP and WEA, which are a part of this contract, incorporate elements of effective job planning and hazard identification. Elements include identifying: the scope of work to be performed; facility operating requirements; potential hazards to Battelle and Contractor staff, the public and environment created by the work performed; hazard control methods and mitigation; and mechanisms to evaluate the adequacy of those controls. The JPP and WEA are key control processes in the safe conduct of work at Battelle. The Contractor is expected to develop their work sequence and job safety analysis (JSA) including information provided within the JPP and WEA in order to access Battelle property or facilities and initiate work.

E. The Contractor shall perform the following additional hazard identification tasks consistent with an approved WSHP:

1. The Contractor shall be responsible for identifying all potential occupational exposures that its employees and the employees of its lower-tier subcontractors will be exposed to while performing any work under this contract.

2. The Contractor shall assure that its employees and those of any lower-tiered subcontractor are medically qualified to perform work associated with any potential occupational exposures that have been identified. Medical qualification and medical surveillance programs are the sole responsibility of the Contractor. In addition, the Contractor is responsible for maintaining any records associated with the administration of these programs.
3. For each of its employees and each of its lower-tier subcontract employees that the Contractor has identified as having potential occupational exposures that require enrollment in a medical surveillance or medical qualification program, the Contractor shall provide its Occupational Medical provider with the following information:
   a. Current information about actual or potential work-related site hazards (chemical, radiological, physical, biological, or ergonomic);
   b. Employee job-task and hazard analysis information, including essential job functions;
   c. Actual or potential work-site exposures of each employee; and
   d. Personnel actions resulting in a change of job functions such that a change of hazards, or exposures results.
4. For each of its employees and each of its lower-tier subcontract employees, a copy of the exposure information provided to the Contractor's occupational medical provider shall be submitted to the Battelle Contracts Representative and approved by Battelle before any of these employees begin work under this contract.

F. The Contractor shall notify the Battelle Contracts Representative immediately of any OSHA-recordable injuries/illnesses, any "off-normal occurrences," or Government property damaged, that the Contractor determines to have occurred in the course of operations onsite and shall furnish such further information as the Battelle Contracts Representative may require. An "off-normal occurrence" is any unplanned or unexpected event, including near misses, or the discovery of a deficiency in a procedure, plan, or system that has real or potentially undesirable consequences to personnel, equipment, facilities, the environment, and/or programs.

G. The Contractor's onsite ES&H activities will be subject to review by the Technical Administrator of this contract. Other representatives of Battelle may conduct periodic inspections of the Contractor's equipment, work and storage areas for compliance with the applicable ES&H requirements. The Battelle Contracts Representative will notify the Contractor by a written Notice of Non-compliance of any observed non-compliance with applicable ES&H requirements. The Contractor shall immediately take appropriate corrective action. The Contractor shall advise the Battelle Contracts Representative, in writing, within five (5) working days of the corrective action taken on any safety non-compliance noted on the written Notice of Non-compliance. If the Contractor fails or refuses to correct the safety non-compliance, Battelle may perform, or cause to be performed, the necessary corrective work and unilaterally charge the Contractor for the cost thereof. Such charges will be deducted from payments otherwise due the Contractor under this contract.

H. The Contractor shall promptly evaluate and resolve any non-compliance with applicable ES&H requirements. If the Contractor fails to provide resolution or if, at any time, the Contractor's acts or failure to act causes substantial harm or an imminent danger to the environment, or health and safety of employees or the public, the Battelle Contracts Representative may issue an order stopping work in whole or in part and the Contractor shall be liable for the delay and any costs thereby incurred. Any stop-work order issued by Battelle under this clause (or issued by the Contractor to a subcontractor in accordance with this clause) shall be without prejudice to any other legal or contractual rights of Battelle. In the event that the Battelle Contracts Representative issues a stop-work order, an order authorizing the resumption of the work may be issued at the discretion of the Battelle Contracts Representative. The Contractor shall not be entitled to an extension of time, or additional cost or fee, or damages by reason of, or in connection with, any work stoppage ordered in accordance with this clause.

I. Employee Concerns Program
1. The Contractor, its agents, employees or subcontractors, are entitled to use the Battelle Employee Concerns Program and Hotline (509) 375-3999. The Hotline operates 24 hours per day, 7 days a week. Messages may be left anonymously, and all concerns are handled with confidentiality to the maximum extent possible. Employee concerns may also be submitted in writing to the Battelle Employee Concerns Office, Battelle, Pacific Northwest National Laboratory, P.O. Box 999, K1-42, Richland, Washington, 99352, or in person at the Staff Concerns Office, Battelle's Research Operation Building during normal business hours, Monday through Friday 7:30 a.m. to 4:30 p.m.
2. For the purpose of this document, allegations, concerns, and complaints are handled in a like manner and are referred to collectively as "employee concerns." A concern can consist of a declaration, statement, or assertion of impropriety or inadequacy on the part of one's employer or others at a DOE Site that has affected (or threatens to affect) aspects of operations, such as the environment, health, safety, quality, or security, and may include fraud, mismanagement, waste, or abuse of authority.
3. No retaliation or retribution shall be taken toward any individual as a result of filing an employee concern consistent with 10 CFR 708.

J. Civil Penalties and Indemnification
1. The 2002 Bob Stump National Defense Authorization Act amended the Atomic Energy Act by adding section 234C "Worker Health and Safety Rules for Department of Energy Nuclear Facilities." It required DOE to promulgate a worker safety and health rule, published in the Federal Register on February 9, 2006, as 10 CFR 851. It establishes worker safety and health requirements that govern the conduct of contractor activities at both nuclear and non-nuclear DOE Sites. Contractors that fail to comply with the Rule are subject to civil penalties or contract penalties.
2. The Contractor assumes full responsibility and shall indemnify, hold harmless, and defend Battelle, its directors, officers, and employees from any civil or contractual liability under section 234C of the Atomic Energy Act of 1954, as amended, or

the implementing regulations, arising out of the activities of the Contractor, its subcontractors, suppliers, agents, employees, and their officers, or directors. The Contractor's obligation to indemnify and hold harmless shall expressly include attorney fees and other reasonable costs of defending any action or proceeding instituted under section 234C or DOE's implementing regulations.

K. The Contractor is responsible for its subcontractors' compliance with the ES&H requirements of this contract. The Contractor shall include a clause substantially the same as this clause in lower-tier subcontracts involving work at on property or facilities owned or controlled by Battelle that are identified as PNNL Work Sites. Such subcontracts shall provide for the right to stop work under the conditions described herein.

S684100-SPCC01

Construction Specifications

3410 Lab 1401 Modifications

Revision No. 0 Date: 5-14-13

Prepared by: _____ Date 5-14-13

Checked by: NA Date _____

TABLE OF CONTENTS

Title and Approval Page		i
Table of Contents		ii
DIVISIONS		**PAGES**
01	**GENERAL REQUIIREMENTS**	
011000	SUMMARY OF WORK	8
012000	PAYMENT PROCEDURE	2
013000	ADMINISTRATIVE REQUIREMENTS	11
013200	PROGRESS DOCUMENTATION	4
014000	QUALITY REQUIREMENTS	4
015000	TEMPORARY FACILITIES AND CONTROLS	4
016000	ENVIRONMENTAL, SAFETY AND HEALTH	12
017000	ENGINEERING, LAYOUT AND INSTALLATION	5
017320	SELECTIVE DEMOLITION	6
017600	ENV. PROTECTION AND WASTE MANAGEMENT	9
017800	COMPLETION AND TURNOVER	6
017900	VENDOR INFORMATION	4
		DRAWING
02	**SITEWORK AND DEMOLITION**	
022000	DEMOLITION	H-3-317134 SH. 2
05	**METALS**	
051000	STRUCTURAL METAL FRAMING	H-3-317134 SH. 2
06	**WOOD, PLASTICS AND COMPOSITES**	
061000	WOOD, PLASTICS AND COMPOSITES	H-3-317134 SH. 2
08	**OPENINGS**	

081100	METAL DOORS AND FRAMES	H-3-317134 SH. 2
081400	WOOD DOORS	H-3-317134 SH. 2
087100	DOOR HARDWARE	H-3-317134 SH. 2
088700	GLAZING SURFACE FILMS	H-3-317134 SH. 2
09	**FINISHES**	
092116	GYPSUM BOARD ASSEMBLIES	H-3-317134 SH. 2
095100	ACOUSTICAL CEILINGS	H-3-317134 SH. 2
096500	RESILIENT WALL BASE AND FLOORING	H-3-317134 SH. 2
099000	PAINTS AND COATINGS	H-3-317134 SH. 2
10	**SPECIALTIES**	
102600	WALL AND DOOR PROTECTION	H-3-317134 SH. 2
13	**SPECIAL CONSTRUCTION**	
134900	STEEL EMF SHIELDING SYSTEM	H-3-317134 SH. 2
20	**GENERAL MECHANICAL**	
200500	COMMON MECHANICAL WORK REQUIREMENTS	H-3-317134 SH. 3
200523	GENERAL DUTY MECHANICAL VALVES	H-3-317134 SH. 3
200529	HANGERS AND SUPPORTS FOR MECHANICAL PIPING AND EQUIPMENT	H-3-317134 SH. 3
200553	IDENTIFICATION FOR MECHANICAL PIPING AND EQUIPMENT	H-3-317134 SH. 3
200700	MECHANICAL PIPING INSULATION	H-3-317134 SH. 4
21	**FIRE SUPPRESSION**	
211101	FIRE PROTECTION ABOVE GRADE	H-3-317134 SH. 4
22	**PLUMBING**	
220500	COMMON WORK RESULTS FOR PLUMBING	H-3-317134 SH. 4
221316	PIPING – CONDENSATE DRAIN WASTE	H-3-317134 SH. 4

23	**HEATING VENTILATION AND AIR CONDITIONING**	
230500	COMMON WORK RESULTS FOR HVAC	H-3-317134 SH. 3
232113	HYDRONIC PIPING	H-3-317134 SH. 4
233000	HVAC AIR DISTRIBUTION	H-3-317134 SH. 4
230800	TESTING AND BALANCING	H-3-317134 SH. 4
26	**ELECTRICAL**	
260500	BASIC ELECTRICAL MATERIALS AND METHODS	H-3-317134 SH. 5
260519	LOW VOLTAGE CONDUCTORS AND CABLES	H-3-317134 SH. 5
260526	GROUNDING AND BONDING	H-3-317134 SH. 5
260533	RACEWAY AND BOXES FOR ELECTRICAL SYSTEMS	H-3-317134 SH. 5
262726	WIRING DEVICES	H-3-317134 SH. 5
28	**ELECTRONIC SAFETY AND SECURITY**	
283100	FIRE DETECTION AND ALARM	H-3-317134 SH. 5

END

SECTION 011000

SUMMARY OF WORK

PART 1 - GENERAL

1.1 SUMMARY

A. Battelle's Pacific Northwest Division manages, operates, and maintains the Pacific Northwest National Laboratory (PNNL) on behalf of the U.S. Department of Energy's (DOE) Office of Science (SC) in Richland, Washington. The PNNL is a multi-program laboratory providing world-class scientific research capabilities and advanced scientific knowledge to support DOE's and the nation's strategic goals in science, national security, energy, and the environment. To meet the laboratory's needs and mission objectives, provide all necessary labor, materials equipment, supervision and subcontracts to Battelle for the modification of laboratory 1401 at Building 3410. The work generally includes architectural wall, ceiling, casework modifications; rework of the existing RF shielding and support structure; HVAC supply and return ductwork modifications with hydronic piping and coil changes, fire sprinkler piping and alarm/detection changes; and electrical power and lighting modifications.

B. Bid Alternate Number 1: FMCS graphics, sequence programming, and tuning per Sheet Note 8 on Drawing H-3-317137 Sh 4 of 4.

1.2 CONTRACT

A. Project will be constructed under a single fixed price general construction contract.

1.3 DRAWINGS

A. Drawings:

WS10179 Sh 1-5
H-3-317134 Sh 1-6
H-3-317135 Sh 1-3
H-3-317136 Sh 1
H-3-317137 Sh 1-4
H-3-317138 Sh 1-4
H-3-317139 Sh 1-3
H-3-317140 Sh 1

B. Reference Drawings

1. Not used.

C. Reference Documents:

1. Job Planning Package (JPP) consisting of:

a. JPP
b. Workplace Exposure Assessment (WEA)
c. IOPS 3410 lab 1401

2. Haskris Document Package consisting of:
   a. Haskris Instruction Manual Rev. 5.0 8-24-11
   b. Haskris Manifold Drawing K9-revA
   c. Haskris document R175-CH(N2)(R4)S(K9).vsd

3. Powervar Document Package consisting of:
   a. Powervar Security Plus UPS User Instruction Manual A55-00002 Rev F 07/11
   b. Powervar Instructions for PDU Procedure 99021-55R Rev 2.0 2-14-13
   c. Powervar Security Plus Series Detailed UPS Specification A55-00015 SEC PLUS 12-15 KVA MARKETING SPECS Rev A 9/10
   d. Powervar Specifications A03-00028 ABCDEF15.0 Rev D 5/22/12

4. ADM-CM-064 Equipment Identification and Labeling

1.4 BATTELLE-FURNISHED PRODUCTS

A. The following products are furnished by Battelle for installation by Contractor:
   1. UPS, Powervar Security Plus, #ABCDEF 15.0-22
   2. UPS Breakout Panel, (PDU Breakout Panel) #99012-55R
   3. Haskris Chiller
   4. Haskris K9 Manifold
   5. Acoustical Ceiling Tiles (to replace minimum number of unusable cut panels from Room 1401)

1.5 WORK SEQUENCE

A. The Date of Final Completion shall be no more than seventy (70) calendar days from Notice of Award. The date of Substantial Completion shall be seven (7) calendar days prior to the date of Final Completion.

B. All service outages including but not limited to electrical, ventilation and fire protection shall be performed outside of normal business hours defined as 6:00 a.m. to 5:00 p.m. Monday through Friday.

C. Lab 1401 and the west portion of Lab Corridor 1280B are to be “down-posted” from an Radiation Buffer Area (RBA) and a temporary air barrier wall installed across Corridor 1280B prior to the start of Lab 1401 demolition work.

D. A temporary air barrier tent/enclosure is to be installed at the interstitial floor opening over Lab 1401 to the 2nd floor Mechanical Area, Room 2400B, prior to cutting the opening in the RF Shielding, plywood and structural joist ceiling of Lab 1401. This is required to maintain building/laboratory HVAC air balance control.

1.6 USE OF PREMISES

A. Except as described in 1.5 work hours shall be 6:00 a.m. to 4:30 p.m. Monday through Thursday. Authorization to access the facility or perform work on site at times other than as specified is allowed and shall require prior written authorization.

B. All personnel performing work shall complete required PNNL training and possess a picture badge issued by PNNL or a Hanford Contractor. Doors shall not be left unlocked, unattended, or blocked open at any time. Doors that are alarmed or not customarily used require specific authorization for use and may require full time supervision by PNNL Security personnel while in use. Provide five (5) working notice to arrange for Security personnel. Provide five (5) working days notice for key and proximity badge access requests.

C. Work area is an operational research facility. The Contractor shall take all necessary measures to limit the impact of construction and demolition activities on the occupants. Noise, dust, fumes, and vapors shall be controlled to the greatest extent practicable. Housekeeping shall be performed on an ongoing basis. Do not obstruct doorways and corridors.

D. Request authorization to access work areas, use storage and laydown areas, perform isolations, conduct outages, and perform work from the Construction Manager (CM). Request authorization before the end of shift for the following days access and work requirements. Approval is obtained the following morning through the Plan of the Day (POD) meeting. Request authorization a minimum of twenty four (24) hours in advance for use of storage and laydown areas. Request authorization to perform isolations and conduct outages in writing a minimum of five (5) weekdays in advance.

E. Building air balance and control is essential to facility operation and can be adversely impacted by construction activities. The Contractor shall request permission from Building Management prior to using Service Corridor rollup doors, and shall not open or block open Lab corridor doors while rollup doors are open.

1.7 PERMITS

A. Contractor Responsibility:

1. The Contractors obligations regarding permits required by Federal, State, and Municipal Laws, Codes and Regulations remain as required by the Contract General Provisions, and are not affected by this Section.

B. Permits

1. General.

a. Notify Battelle in advance of work requiring a permit. The Contractor shall meet the requirements set forth in the permit and post the permit in a conspicuous location and ensure employees' awareness of the permit contents.
b. In addition to permits identified in this Section, other sections may require use or approval of forms and requests that are not titled as permits but generally have the same effect. Contractor shall comply with the requirements identified with those forms and requests.

2. Class II Penetration Permit: Required for cutting, drilling, or otherwise penetrating solid material greater than 2 in. in depth, or penetrations through hollow structures where the

absence of utilities or other hazards has not been positively determined. Notify Battelle five (5) days before the work is scheduled. Requirements for performing Class I and Class II blind penetrations are located in the Contractor Environmental Safety and Health Manual procedure titled Electrical Work Safety.

3. Energized Electrical Permit: Required for work on existing energized electrical systems including safe to work checks. Notify Battelle five (5) days before the work is scheduled.

4. Hot Work Permit: Required for each location in which work involves welding, cutting, grinding, open flame soldering, spark generation or open flame. Notify Battelle three (3) days before the work is scheduled.

5. Outage Permit: Require for removing any Battelle system from service. Notify Battelle five (5) days before outage is required.

1.8 WORK UNDER OTHER CONTRACTS

A. Not used.

1.9 SPECIFICATION FORMATS AND CONVENTIONS

A. Specification Format: The Specifications are organized into Divisions and Sections using the 2004 48-division CSI/CSC's "Master Format" numbering system.

B. Specification Content: The Specifications use certain conventions for the style of language and the intended meaning of certain terms, words, and phrases when used in particular situations. These conventions are as follows:

1. Abbreviated Language: Language used in the Specifications and other Contract Documents is abbreviated. Words and meanings shall be interpreted as appropriate. Words implied, but not stated, shall be inferred, as the sense requires. Singular words shall be interpreted as plural, and plural words shall be interpreted as singular where applicable as the context of the Contract Documents indicates.

2. Imperative mood and streamlined language: Are generally used in the Specifications. Requirements expressed in the imperative mood are to be performed by Contractor. Occasionally, the indicative or subjunctive mood may be used in the Section Text for clarity to describe responsibilities that must be fulfilled indirectly by Contractor or by others when so noted.

   a. The words "shall," "shall be," or "shall comply with," depending on the context, are implied where a colon (:) is used within a sentence or phrase.

1.10 WORK CONTROL PROCESS

A. Work Control Policy: The work control process identifies known hazards; outlines controls to mitigate the hazards, outlines expectations for hazard controls, as well as other activity specific work performance requirements. Battelle will assist in the identification and mitigation of

hazards through the Battelle Job Planning Package (JPP), Training and Permitting, but the final responsibility of hazard identification and mitigation is the responsibility of the Contractor.

a. Job Planning Package: Battelle will provide the Contractor with a JPP as part of the Request For Proposal documents. The JPP identifies the phases of work to be performed, permits, training/qualifications, special tools or materials, pre- and post-notification requirements, pre- and post-job meetings, system/equipment configuration and verification, outages, waste disposal path, critical (mandatory) work steps and environmental and/or worker safety hazards. The JPP will contain the following attachments:

1) Work Place Exposure Assessment: Identifies non-radiological hazards.

1.11 TRAINING FOR CONTRACT PERSONEL

A. General: Include costs for course attendee's time in proposal. Battelle is responsible for initial and refresher training course fees. Contractor shall be required to pay course fees for no-shows and any retraining required as a result of failure. Classroom training will be conducted on Battelle premises unless otherwise noted.

B. GERT (General Employee Radiation Training) and PNNL Laboratory Orientation are required prior to obtaining a Battelle badge and prior to performing work at PNNL. Coordinate with the Construction Manager to schedule training.

1. GERT (General Employee Radiological Training) (817)
   Required recipients: All workers on job site
   Duration: 0.4 hours
   Scheduling: 3 working days
   Method: External or Battelle - Web Based
   Retrain Cycle: 2 years

2. PNNL Laboratory Orientation (1450)
   Required recipients: All workers on job site
   Duration: 2 1/2 hours
   Scheduling: 3 working days
   Method: External or Battelle - Web Based
   Retrain Cycle: None

3. Safety and Health Refresher Training (1851)
   Required recipients: All workers on job site who have previously received 1450
   Duration: 0.6 hours
   Scheduling: 3 working days
   Method: External or Battelle – Web Based
   Retrain Cycle: 1 year

4. Initial Security Refresher for Non-Staff (3015)
   Required recipients: All workers on job site who have previously received 1450
   Duration: 0.3 hours
   Scheduling: 3 working days
   Method: External or Battelle - Web Based
   Retrain Cycle: 1 year

C. Contractor personnel are required to have training as defined on the Job Planning Package (JPP) and appropriate to work to be performed. Submit documentation of previously completed courses to Battelle.

1. Lock & Tag for Authorized Staff Members (692)
   Required recipients: Workers potentially exposed to the release of hazardous energy that do not have current documented OSHA/WISHA Lock and Tag training.
   Duration: 4 hours
   Scheduling: 3-5 working days
   Method: Classroom
   Retrain Cycle: 2 years

2. Lock & Tag – PNNL Site Specific Gap Training (Course 1992)
   Required recipients: Workers potentially exposed to the release of hazardous energy that have other current documented OSHA/WISHA Lock and Tag training.
   Duration: 1 hour
   Scheduling: 3-5 working days
   Method: Classroom
   Retrain Cycle: None

3. Radiological Worker I: Initial (819)
   Required recipients: Workers designated in the Radiation Work Permit
   Duration: 3.8 hours
   Scheduling: 3-5 working days
   Method: Classroom and Practical
   Retrain Cycle: 2 years

4. Radiological Worker I: Refresher (820)
   Required recipients: Workers designated in the Radiation Work Permit
   Duration: 0.5 hours
   Scheduling: 3-5 working days
   Method : External or Battelle - Web Based
   Retrain Cycle: 1 year after initial training (2 years)

5. Hot Work Fire Watch (679)
   Required recipients: Workers that will perform or monitor activities requiring generation of heat, sparks or open flame. All hot work shall be conducted in accordance with a Hot Work Permit.
   Duration: 1 hour
   Scheduling: 3-5 working days
   Method : Classroom
   Retrain Cycle: 2 years

6. Hot Work Permit Training (988)
   Required recipients: Workers or supervisors responsible for Hot Work Permit documentation.
   Duration: 1 hour
   Scheduling: 3-5 working days
   Method: Classroom
   Retrain Cycle: 2 years

7. Hands-on Fire Extinguisher Training
   Required recipients: Workers performing fire watch activities.
   Training shall be documented.
   Duration: 1 hour
   Scheduling: Training performed and documented by the performing Contractor
   Method: Classroom
   Retrain Cycle: 2 years
   Retrain Cycle: 1 year

8. Hazard Communication: Asbestos Awareness (664)
   Required recipients: Required for performing non-abatement work near asbestos containing materials.
   Duration: 2 hour
   Scheduling: 3-5 working days
   Method: Classroom Based
   Retrain Cycle: None – refresher course

9. Respiratory Protection: Wearers (716)
   Required recipients: Required prior to respirator use. Course is in addition to mandatory medical authorization and mask fit testing.
   Duration: 1.1 hours
   Scheduling: 3-5 working days
   Method: Classroom
   Retrain Cycle: 1 year

10. Hazardous Waste Management Training (833)
    Required recipients: Contractor's designated environmental coordinator and alternate environmental coordinator for work that will generate hazardous waste
    Duration: 1 hour
    Scheduling: 3 working days
    Method: External or Battelle - Web Based
    Retrain Cycle: 1 year

11. PNWD Electrical Safety Core Training (Course 1014)
    Required recipients: Workers performing activities covered by an Energized Electrical Work Permit
    Duration: 4 hours
    Scheduling: 3-5 working days
    Method: Classroom Based
    Retrain Cycle: 3 years

12. Integrated Operations System
    Required recipients: Varies by work area.
    Duration: Varies by work area.
    Scheduling: 3 working days
    Method: Read and sign.
    Retrain Cycle: As required

PART 2 - PRODUCTS – not used

PART 3 - EXECUTION – not used

END OF SECTION 011000

SECTION 012000

PAYMENT PROCEDURES

PART 1 - GENERAL

1.1 SUMMARY

A. Reference Contract General Provisions for additional instruction.

1.2 SUBMITTALS

A. Schedule of Values: Submit for approval no later than twenty one (21) calendar days after Notice of Award one (1) copy of the Schedule of Values allocating portions of the Contract sum to various portions of the Work. Coordinate the Schedule of Values with the Construction Schedule. Upon approval by Battelle, the Schedule of Values shall be used as the basis for reviewing Contractor Applications for Payment. No invoice will be accepted prior to Battelle approval of the Schedule of Values.

1. Each item in the Schedule of Values shall be clearly identified as applicable to Contract line items. Level of effort activities if used shall also be separated into portions applicable to Line Item Number 1 or Line Item Number 2.
2. Coordinate submittal with the Construction Schedule required per 013200. Correlate items in the Schedule of Values directly with tasks enumerated in the Construction Schedule.
3. The Schedule of Values shall provide a breakdown of the Contract Sum in sufficient detail to facilitate continued evaluation of Applications for Payment and progress reports.
4. Round amounts to nearest whole dollar. The total shall equal the Contract Sum.
5. When previously authorized in writing provide a separate line item in the Schedule of Values for each part of the Work where Applications for Payment may include materials or equipment purchased or fabricated and stored on site.
6. Include the following Project and Contract identification on the Schedule of Values:
   a. Project name
   b. Battelle Contract number
   c. Submittal number
   d. Contractor's name and address.
   e. Date of submittal

B. Revised Schedule of Values: Update and resubmit one (1) copy of the Schedule of Values when Change Orders or Change Directives result in a change in the Contract Sum. Revise and resubmit one (1) copy of the Schedule of Values when, at the discretion of Battelle, it is determined that the Schedule of Values does not approximate the actual value of Work.

1.3 PROGRESS VERIFICATION

1. Meet with the Battelle Construction Manager and, utilizing the approved Schedule of Values, verify and agree upon the percentage of work complete for each activity.
2. Applications for Payment shall reflect the agreed upon percentages of work completed.
3. No invoice will be accepted without prior Construction Manager verification and approval.

END OF SECTION 012000

SECTION 013000

ADMINISTRATIVE REQUIREMENTS

PART 1 - GENERAL

1.1 SUMMARY

A. This Section includes administrative and procedural requirements:

1. Submittals
2. Product delivery, storage, and handling;
3. Product Substitutions and Comparable products.
4. Requests for Information (RFI)

1.2 DEFINITIONS

A. Products: Items purchased for incorporating into the Work, whether purchased for Project or taken from previously purchased stock. The term "product" includes the terms "material," "equipment," "system," and terms of similar intent.

1. Named Products: Items identified by manufacturer's product name, including make or model number or other designation, shown or listed in manufacturer's published product literature, that is current as of date of the Contract Documents.
2. New Products: Items that have not previously been incorporated into another project or facility, except that products consisting of recycled-content materials are allowed, unless explicitly stated otherwise. Products salvaged or recycled from other projects are not considered new products.
3. Comparable Product: Product that is demonstrated and approved through submittal process, or where indicated as a product substitution, to have the indicated qualities related to type, function, dimension, in-service performance, physical properties, appearance, and other characteristics that equal or exceed those of specified product.

B. Substitutions: Changes in products, materials, equipment, and methods of construction from those required by the Contract Documents and proposed by Contractor.

C. Approval Submittals: Written and graphic information that requires Battelle’s approval responsive action.

D. Informational Submittals: Written information that does not require Battelle’s approval. Informational Submittals may be rejected for not complying with requirements.

E. Request for Information (RFI): An RFI is a written documented administrative method by which the Contractor can request clarification and/or direction from Battelle on Contract requirements. An RFI is not a change document, therefore, the contractor is not authorized to make or infer changes to the Contract Work based on a Battelle response to an RFI.

1.3 SUBMITTALS

A. Coordination: Coordinate preparation and processing of submittals with performance of construction activities.

1. Coordinate each submittal with fabrication, purchasing, testing, delivery, other submittals, and related activities that requires sequential activity.
2. Coordinate transmittal of different types of submittals for related parts of the Work so processing will not be delayed because of need to review submittals concurrently for coordination.

a. Battelle reserves the right to withhold action on a submittal requiring coordination with other submittals until related submittals are received.

B. Submittal Schedule: A submittal schedule identifying required submittals and the number of copies required is attached to the end of this section.

1. This schedule is provided as a convenience to the Contractor.
2. The omission of an item from the submittal schedule does not relieve the Contractor from the responsibility of submitting an item listed in the individual specification sections.
3. The submittal schedule shall be updated by the Contractor to show critical submittal and review dates, and submitted for approval with the project schedule.

C. Processing Time: Allow enough time for submittal review, including time for re-submittals, as follows. Time for review shall commence on Battelle's receipt of submittal.

1. Initial Review: Allow 10 working days for initial review of each submittal. Allow additional time if processing must be delayed to permit coordination with subsequent submittals. Battelle will advise Contractor when a submittal being processed must be delayed for coordination.
2. Re-submittal Review: Allow 5 working days for processing each re-submittal.
3. Lack of Timely Submittal: No extension of the Contract Time will be authorized because of failure to transmit submittals enough in advance of the Work to permit processing.

D. Transmittal: Transmit each submittal using the Skire Unifier electronic systems "Submittal" process, provided by Battelle. Battelle will return submittals, without review, received from sources other than Contractor.

1. An electronic copy or scan of each submittal shall be attached to the "Submittal Form" in the Unifier system.
2. Include Contractor's certification stating that information submitted complies with requirements of the Contract Documents.

E. Transmittal of non-electronic Submittals: For submittals that cannot be transmitted electronically due to size or material properties (e.g. physical samples), transmit each submittal using the Skire Unifier electronic systems "Submittal" process, provided by Battelle and indicated items which will be transmitted under separate cover in the provided fields.

F. Product Data Submittals: Submit a minimum four copies of each for consideration. Three copies will be returned to the Contractor, Battelle will retain one copy. Include Specification Section number and title and Drawing numbers and titles.

a. Product data submittals shall include performance, electrical, dimensional, accessories, make and model number for the equipment at a minimum. Enough information must be provided to determine the appropriateness, fit and function of the equipment within the system.

1) Required product data submittals are identified in the Submittal Schedule on the drawings.

2) Manufacturers' Data Sheets: Where product data contain manufacturers' standard data, include only sheets pertinent to product or component installed. Mark each sheet to identify each product or component incorporated into the Work. If data include more than one item in a tabular format, identify each item using appropriate references from the Contract Documents. Identify data applicable to the Work and delete references to information not applicable.

G. Substitution Requests: Using the Skire Unifier electronic systems “Submittal” process. Identify product or fabrication or installation method to be replaced. Include Specification Section number and title and Drawing numbers and titles.

1. Documentation: Show compliance with requirements for substitutions and the following, as applicable:

a. Statement indicating why specified material or product can not be provided.
b. Coordination information, including a list of changes or modifications needed to other parts of the Work and to construction performed by Battelle and separate contractors that will be necessary to accommodate proposed substitution.
c. Detailed comparison of significant qualities of proposed substitution with those of the Work specified. Significant qualities may include attributes such as performance, weight, size, durability, visual effect, and specific features and requirements indicated.
d. Product Data, including drawings and descriptions of products and fabrication and installation procedures.
e. Samples, where applicable or requested.
f. List of similar installations for completed projects with project names and addresses and names and addresses of owners and architects.
g. Material test reports from a qualified testing agency indicating and interpreting test results for compliance with requirements indicated.
h. Research/evaluation reports evidencing compliance with building code in effect for Project, from a model code organization acceptable to authorities having jurisdiction.
i. Detailed comparison of Contractor's Construction Schedule using proposed substitution with products specified for the Work, including effect on the overall Contract Time. If specified product or method of construction cannot be provided within the Contract Time, include letter from manufacturer, on manufacturer's letterhead, stating lack of availability or delays in delivery.
j. Cost information, including a proposal of change, if any, in the Contract Sum.
k. Contractor's certification that proposed substitution complies with requirements in the Contract Documents and is appropriate for applications indicated.

l. Contractor's waiver of rights to additional payment or time that may subsequently become necessary because of failure of proposed substitution to produce indicated results.

2. Battelle Review: Battelle will make every attempt to expedite review of a substitution requests, however, Contractor shall allow 10 days for disposition. If necessary, Battelle will request additional information or documentation for evaluation within one week of receipt of a request for substitution.

a. If no decision on use of a proposed substitution is made within the time allocated, the Contractor is obligated to use the product specified and shall hold Battelle harmless for any impact to the Construction Schedule, and shall further be held responsible for completing all Work within the approved period of performance.
b. Any acceptance of a Contractors request for substitution shall be documented on a formal written Change Order.

H. Compatibility of Options: If Contractor is given option of selecting between two or more products for use on Project, product selected shall be compatible with products previously selected, even if previously selected products were also options.

1. Each contractor is responsible for providing products and construction methods compatible with products and construction methods of other contractors.
2. If a dispute arises between contractors over concurrently selectable but incompatible products, Battelle will determine which products shall be used.

I. Distribution: Furnish copies of final submittals to manufacturers, subcontractors, suppliers, fabricators, and installers, and others as necessary for performance of construction activities. Show distribution on transmittal forms. Reference Section 01400.

J. Use for Construction: Use only final submittals with mark indicating action taken by Battelle in connection with construction.

1. Contractor shall maintain copies of latest submitted and dispositioned submittals at the Worksite and available for Battelle review at all times.

1.4 PRODUCT DELIVERY, STORAGE, AND HANDLING

A. Deliver, store, and handle products using means and methods that will prevent damage, deterioration, and loss, including theft. Comply with the manufacturers written instructions.

1. Schedule delivery to minimize long-term storage at Project site and to prevent overcrowding of construction spaces.
2. Coordinate delivery with installation time to ensure minimum holding time for items that are flammable, hazardous, easily damaged, or sensitive to deterioration, theft, and other losses.
3. Deliver products to Project site in an undamaged condition in manufacturer's original sealed container or other packaging system, complete with labels and instructions for handling, storing, unpacking, protecting, and installing.
4. Inspect products on delivery to ensure compliance with the Contract Documents and to ensure that products are undamaged and properly protected. Reference Section 01400.

5. Store products to allow for inspection and measurement of quantity or counting of units.
6. Store products that are subject to damage by the elements, under cover in a weather tight enclosure above ground, with ventilation adequate to prevent condensation.

B. Storage: Provide a secure location and enclosure at Project site for storage of materials and equipment. Coordinate location with Battelle.

PART 2 - PRODUCTS

2.1 PRODUCT OPTIONS

A. General Product Requirements: Provide products that comply with the Contract Documents, that are undamaged, and unless otherwise indicated, that are new products at time of installation.

1. Provide products complete with accessories, trim, finish, fasteners, and other items needed for a complete installation and indicated use and effect.
2. Standard Products: If available, and unless custom products or nonstandard options are specified, provide standard products of types that have been produced and used successfully in similar situations on other projects.
3. Descriptive, performance, and reference standard requirements in the Specifications establish "salient characteristics" of products.
4. Or Equal: Where products are specified by name and accompanied by the term "or equal" or "or approved equal" or "or approved," the Contractor shall comply with provisions in "Comparable Products" Article to obtain approval for use of an unnamed product.

B. Product Selection Procedures: Procedures for product selection include the following:

1. Available Products: Where Specification paragraphs or subparagraphs titled "Available Products" introduce a list of names of both products and manufacturers, provide one of the products listed or another product that complies with requirements. Comply with provisions in "Comparable Products" Article to obtain approval for use of an unnamed product.
2. Available Manufacturers: Where Specification paragraphs or subparagraphs titled "Available Manufacturers" introduce a list of manufacturers' names, provide a product by one of the manufacturers listed or another manufacturer that complies with requirements. Comply with provisions in "Comparable Products" Article to obtain approval for use of an unnamed product.
3. Product Options: Where Specification paragraphs titled "Product Options" indicate that size, profiles, and dimensional requirements on Drawings are based on a specific product or system, provide either the specific product or system indicated or a comparable product or system by another manufacturer. Comply with provisions in "Product Substitutions" Article.
4. Visual Matching Specification: Where Specifications require matching an established Sample, select a product (and manufacturer) that complies with requirements and matches Battelle's sample. Battelle's decision will be final on whether a proposed product matches satisfactorily.

a. If no product available within specified category matches satisfactorily and complies with other specified requirements, comply with provisions of the Contract Documents on "substitutions" for selection of a matching product.

5. Visual Selection Specification: Where Specifications include the phrase "as selected from manufacturer's colors, patterns, textures" or a similar phrase, select a product (and manufacturer) that complies with other specified requirements.

a. Standard Range: Where Specifications include the phrase "standard range of colors, patterns, textures" or similar phrase, Battelle will select color, pattern, or texture from manufacturer's product line that does not include premium items.
b. Full Range: Where Specifications include the phrase "full range of colors, patterns, textures" or similar phrase, Battelle will select color, pattern, or texture from manufacturer's product line that includes both standard and premium items.

2.2 PRODUCT SUBSTITUTIONS

A. Timing: Contractor shall time the submission of substitution requests so as not to impact the Construction Schedule or the Contract period of performance.

B. Conditions: Battelle will only consider product substitutions under the following described conditions:

1. Requested substitution offers Battelle a substantial advantage in cost, time, energy conservation, or other considerations, after deducting additional responsibilities Battelle must assume. Battelle's additional responsibilities may include cost of redesign and evaluation, increased cost of other construction by Battelle, and similar considerations.
2. Requested substitution does not require extensive revisions to the Contract Documents.
3. Requested substitution is consistent with the Contract Documents and will produce indicated results.
4. Substitution request is fully documented and properly submitted.
5. Requested substitution will not adversely affect Contractor's Construction Schedule.
6. Requested substitution has received necessary approvals of authorities having jurisdiction.
7. Requested substitution is compatible with other portions of the Work and has been coordinated with other portions of the Work.
8. Requested substitution provides specified warranty.
9. If requested substitution involves more than one contractor, requested substitution has been coordinated with other portions of the Work, is uniform and consistent, is compatible with other products, and is acceptable to all contractors involved.

2.3 COMPARABLE PRODUCTS

A. Where products or manufacturers are specified by name, submit the following, in addition to other required submittals, to obtain approval of an unnamed product:

1. Evidence that the proposed product does not require extensive revisions to the Contract Documents, that it is consistent with the Contract Documents and will produce the indicated results, and that it is compatible with other portions of the Work.

2. Detailed comparison of significant qualities of proposed product with those named in the Specifications. Significant qualities include attributes such as performance, weight, size, durability, visual effect, and specific features and requirements indicated.
3. Evidence that proposed product provides specified warranty.
4. List of similar installations for completed projects with project names and addresses and names and addresses of owners and architects, if requested.
5. Samples, if requested.

PART 3 - EXECUTION

3.1 SUBMITTALS

A. Contractor Review

1. Prior to submittal to Battelle, Contractor shall review each submittal and check for accuracy completeness and compliance with the Contract Documents.
2. Contractor shall stamp each submittal with a uniform, approval stamp. Include Project name and location, submittal number, Specification Section title and number, name of reviewer, date of Contractor's approval, and statement certifying that submittal has been reviewed, checked, and approved for compliance with the Contract Documents.

B. Battelle Review

1. Battelle will review each submittal, and make marks to indicate corrections or modifications required, and return the marked up submittal to the Contractor. Battelle will stamp each submittal to indicated Battelle's disposition of the submittal and any subsequent actions required by the Contractor as follows: (Note: Battelle will not review submittals that do not bear Contractor's approval stamp and will return them without action.)

    a. No Exception Taken: Battelle has not found anything within the submittal that requires rework to the submittal.
    b. Exception Taken as Noted: No Re-submittal Required: Battelle has found and marked up discrepancies within the submittal. Contractor shall make corrections as noted but is not required to resubmit the package to Battelle.
    c. Exception Taken as Noted - Resubmittal Required: Battelle has found and marked up discrepancies within the submittal, contractor shall make corrections as noted and resubmit the package to Battelle.
    d. Reject – Revise and Resubmit: Submittal is rejected in its entirety or has not been transmitted per these specifications; contractor shall remedy the discrepancy and resubmit the entire package.

2. Informational Submittals: Battelle will review each submittal without returning any disposition to the contractor, unless the submittal does not comply with requirements, in which case the submittal will be rejected and returned.
3. Unsolicited Submittals: Submittals not required by the Contract Documents are reviewed at Battelle's sole discretion and may not be reviewed and may be discarded.

3.2 REQUESTS FOR INFORMATION (RFI)

A. Requests for Information shall be submitted using the Skire Unifier electronic systems “RFI” process RFI Process

1. RFI Submittal: All RFIs shall be submitted by the Contractor, in writing, in clear concise language, and in sufficient detail to fully describe the issue. RFIs from sub-tier contractors shall be reviewed by the Contractor, and if appropriate, submitted by the Contractor in accordance with this specification.

2. Optional Information:

a. Contractor may provide a statement of interpretation or proposed resolution in the space provided on the RFI form.

3. Request for Information Review Time: Battelle shall review properly submitted RFIs and return them, with an answer, within 10 days of receipt. Where conditions warrant, the Contractor may request expedited review. Failure of Battelle to fulfill Contractors request for expedited review shall not justify any extension of time to the Contractor.

SUBMITTAL SCHEDULE

Submittal No.	Description	Spec. Section / Dwg. No.	No. of Copies	Type	Review 1			Review 2		
					Date Received	Date Returned	Status	Date Received	Date Returned	Status
1	Schedule of Values	012000								
2	Preliminary Construction Schedule	013200								
3	Construction Schedule	013200								
4	Letter of Confirmation	016000								
5	Job Safety Analysis	016000								
6	Declaration of Key Supervisor(s)	016000								
7	Electrical Worker Qualifications	016000								
8	Construction and Demolition Waste Recycling Form	017600								
9	Record Drawings and Specifications	017800								
10	Warranties	017800								
11	Preliminary Vendor Information Manual	017900								
12	Final Vendor Information Manual	017900								
13	Shop Drawings – EMS Shielding System	134900								
14	Baseline EMF Field Measurements	134900								
15	As-built EMF Field Measurements	134900								
16	Startup Reports	200500								
17	Product Submittals – Division 21 Fire Suppres-sion	200500								
18	Test Reports – Division 21 Fire Suppression	200500								
19	Product Submittals – Division 22 Plumbing	200500								
20	Test Reports – Division 22 Plumbing	200500								
21	Documentation of Labeling Accuracy Inspection	230500								
22	Product Submittals – Division 23 Hydronic Piping	200500								
23	Test Reports – Division 23 Hydronic Piping	200500								
24	Functional Test Report	230800								
25	Test Reports – Cabling	260519								
26	Test Reports – Wiring Devices	262726								

27	Documentation of Labeling Accuracy Inspection	262726								
28	Acceptance Test Procedure – Fire Detection and Alarm	283100								
29	Acceptance Test Results – Fire Detection and Alarm	283100								

END OF SECTION 013000

SECTION 013200

CONSTRUCION PROGRESS DOCUMENTATION GENERAL

PART 1 – GENERAL

1.1 SUMMARY

A. This section contains administrative and procedural requirements for construction progress documentation.

1.2 DEFINITIONS

A. Activity: A discrete part of a project that can be identified for planning, scheduling, monitoring, and controlling the construction project. Activities included in a construction schedule consume time and resources.

1. Critical activities are activities on the critical path. They must start and finish on the planned early start and finish times.
2. Predecessor activity is an activity that must be completed before a given activity can be started.

B. CPM: Critical path method, which is a method of planning and scheduling a construction project where activities are arranged based on activity relationships. Network calculations determine when activities can be performed and the critical path of Project.

C. Critical Path: The longest continuous chain of activities through the network schedule that establishes the minimum overall Project duration and contains no float.

D. Event: The starting or ending point of an activity.

E. Earned Value: The measure of dollars earned for completing work on an activity basis.

F. Float: The measure of leeway in starting and completing an activity.

1. Free float is the amount of time an activity can be delayed without adversely affecting the early start of the following activity.
2. Total float is the measure of leeway in starting or completing an activity without adversely affecting the planned Project completion date.

G. Fragnet: A partial or fragmentary network that breaks down activities into smaller activities for greater detail.

H. Major Area: A story of construction, a separate building, or a similar significant construction element.

I. Milestone: A key or critical point in time for reference or measurement.

J. Network Diagram: A graphic diagram of a network schedule, showing activities and activity relationships.

K. Resource: A definable labor entity, material commodity, or subcontract service with a corresponding measurement for each activity. Labor shall be shown by craft or labor type and man-hour, materials by the standard industry measurement for material in place, subcontract services shall be measured by an appropriate standard as approved by the Project Manager.

1.3 SUBMITTALS

A. Preliminary Construction Schedule: Seven (7) calendar days after Notice of Award, submit for information a schedule covering the first thirty (30) calendar days of the Contract, starting with receipt of Notice of Award.

B. Construction Schedule: No later than twenty one (21) calendar days after Notice of Award submit for Approval the Construction Schedule for the entire construction period. Coordinate Construction Schedule with Schedule of Values specified in 012000.

C. Reports: At bi-weekly intervals deliver Two Week Look Ahead Schedules to the Battelle Construction Manager.

PART 2 - PRODUCTS

2.1 Prepare schedules using commercial project planning software.

PART 3 - EXECUTION

3.1 SCHEDULE PREPARATION

A. Prepare Startup and Construction schedule contents in accordance with the following:

1. Schedule format shall be a detailed Critical Path Method time-scaled logic diagram (time scaled activity bars and constraints), with a supporting tabulation of activities. As a minimum, activity bars, activity descriptions and numbers, constraints, milestones and critical path shall be shown on the diagram.
2. Activity durations shall be in working days. Activity durations shall not exceed ten working days, with exception of level-of-effort activities. Activity titles shall be self-explanatory, with abbreviations shown in a legend on the document. Identify early start, late finish, restraining activities, total float, and critical path.
3. Submittal Review Time: Include allowance for review and re-submittal times of Contract required data. Coordinate submittal review times in Contractor's Construction Schedule with Submittals Schedule.
4. Activity description logic sequence and relationship. Schedules shall identify critical path activities, including logical sequence and relationship of activities for engineering, design, submittals, procurement, fabrication, delivery, erection, installation, and testing of work covered by Contract. Level of detail is at discretion of Battelle.

a. Include procurement process activities for long lead items and major items as separate activities in schedule. Procurement cycle activities include, but are not limited to, submittals, approvals, purchasing, fabrication, and delivery.

b. Constraints: Include constraints and work restrictions indicated in the Contract Documents and as follows in schedule, and show how the sequence of the Work is affected.

1) Arrange list of activities on schedule by phase.
2) Include a separate activity for each portion of the Work performed by Battelle.
3) Include a separate activity for each long lead or critical delivery.
4) Include a separate activity for each product, include delivery dates; stipulate the earliest possible delivery date.
5) Show the effect of Work Restrictions on the schedule.

c. Work Stages: Indicate important stages of construction for each major portion of the Work, including, but not limited to, the following:

1) Subcontract awards
2) Mobilization
3) Submittals
4) Purchases
5) Fabrication
6) Demolition (Include installing air barrier walls and interstitial enclosure)
7) Outages (HVAC, Fire Sprinkler/Detection, Electrical)
8) Deliveries including Owner furnished equipment
9) Installation (Work of each major subcontractor…Architectural, Shielding contractor, Mechanical HVAC, Piping, Fire Protection/Detection, Controls, Electrical)
10) Tests and inspections (including Shield Test)
11) Substantial Completion
12) Final Completion

d. Milestones: Include milestones indicated in the Contract Documents in schedule, including, but not limited to, Award, Notice to Proceed, Substantial Completion, and Final Completion.

3.2 SCHEDULE MAINTENANCE

A. Contract Modifications: For each proposed contract modification and concurrent with its submission, prepare a time-impact analysis using fragnets to demonstrate the effect of the proposed change on the overall project schedule.

B. Schedule Updating: At monthly intervals, a review of job progress shall take place between the Contractor and designated Battelle representatives to determine actual progress. Participants shall compare actual job progress with scheduled progress. The parties shall negotiate percent complete for each applicable activity.

1. Update shall include agreed to actual quantities of materials installed and deliverables furnished. Contractor shall issue the updated schedule with the Contractors monthly Application for Payment.
2. Revise schedule immediately after each meeting or other activity where revisions have been recognized or made. Contractor shall issue updated schedule(s) to the Battelle CM.

3.3 REPORTS

A. Two Week Look Ahead: The Contractor shall prepare and submit on a bi-weekly basis a two week schedule that looks at the upcoming two weeks in the Construction Schedule on a detailed level that forecasts daily planning of the work, and outages and interfaces with existing utilities, systems, services, and building personnel.

3.4 CONSTRUCTION PHOTOGRAPHS

A. Not used.

END OF SECTION 013200

SECTION 014000

QUALITY REQUIREMENTS

PART 1 - GENERAL

1.1 SUMMARY

A. This Section includes administrative and procedural requirements for implementation of Contract specific quality assurance (QA) and quality control (QC) requirements.

B. Inspection and testing requirements.

1. Specific inspection and testing requirements are specified in specification sections and/or drawings.
2. Any specific inspections, tests or other related actions do not relieve Contractor from requirement to implement specified QA and/or QC requirements nor relieve Contractor of compliance with Contract requirements.

1.2 DEFINITIONS

A. Quality Assurance: Associated documented program/procedures and resultant activities, actions, and performance during the execution of the Contract to provide confidence that quality is achieved. Quality is a condition that is achieved when items, services or processes meets or exceeds Contract requirements.

B. Quality Control (Inspection and Testing): Associated documented program/procedures and resultant inspections, test activities, actions, and performance during the execution of the Contract to evaluate that ongoing and completed construction complies with requirements. This does not include verification for Contract acceptance performed by Battelle or other Battelle Contracted parties.

C. Testing Agency: An entity engaged by Contractor and/or Battelle to perform specific inspections, tests or both. Testing laboratory shall mean the same as testing agency.

D. Qualifications:

1. Fabricator Qualifications: A firm experienced in producing products similar to those indicated for this Contract work scope and with a record of successful in-service performance, as well as sufficient production capacity.
2. Factory-Authorized Service Representative Qualifications: An authorized representative of manufacturer who is trained and approved by manufacturer to install, inspect, test or calibrate manufacturer's products that are similar in material, design, and extent to those indicated for this Contract.
3. Installer Qualifications: A firm or individual experienced in installing, erecting, or assembling work similar in material, design, and extent to that indicated for this Contract, whose work has resulted in construction with a record of successful in-service performance.

4. Manufacturer's Field Services: A factory-authorized service representative to inspect field-assembled components and equipment installation, including service connections.
5. Manufacturer Qualifications: A firm experienced in manufacturing products or systems similar to those indicated for this Contract and with a record of successful in-service performance.
6. Testing Agency Qualifications: An agency with the experience, capability and as applicable certification to conduct testing and inspecting indicated and that specializes in types of tests and inspections to be performed.

1.3 DOCUMENTATION

A. Record of all examinations and tests shall be submitted no later than the date of request for Substantial Completion Inspection and, at a minimum, shall include:

1. Date
2. Contract number.
3. Inspection or testing agency.
4. Dates and locations inspections and tests
5. Names and certification level of individuals conducting inspections and tests.
6. Description of the work and inspection and test method.
7. Identification of product and design document reference
8. Complete inspection or test data.
9. Inspection and test results and an interpretation of results.
10. As applicable, ambient conditions at time of sample taking, testing and inspection
11. Determination whether inspected or tested work complies with project requirements.
12. Name and signature of inspector or testing personnel
13. Description of discrepant or nonconforming conditions.
14. Recommendations on re-testing and re-inspecting.

B. As required, provide copies of licenses, certifications, correspondence, records, and similar documents, established for compliance with standards and regulations bearing on performance of the work.

1.4 QUALITY ASSURANCE

A. Specific Quality Assurance Program/Procedures:

1. Not used.

B. Contractor Nonconformance Reporting:

1. Report to the Battelle Contracts Representative any nonconformance or deviation from Battelle’s technical requirements. Utilize Battelle’s Contractor Nonconformance Report (CNCR) available at www.pnl.gov/contracts/documents. The completed CNCR shall be submitted by the Contractor to the Battelle Contracts Representative to request Battelle to accept a deliverable not meeting all of Battelle’s technical requirements. The decision whether to accept or reject such a request shall be within Battelle’s sole discretion, and the Contractor shall not proceed in accordance with the requested deviation or present for inspection or acceptance any product produced in accordance with such deviation, unless and until Battelle’s written approval on the CNCR is received by the Contractor.

C. Contract specific Battle Quality Assurance Clauses:

1. Battelle Quality Assurance Clauses may be included in Contract, as applicable.

1.5 QUALITY CONTROL

A. Battelle Responsibilities:

1. Battelle will perform inspection and/or testing or engage inspection / testing agencies as identified in Contract Documents. All other inspection and testing shall be the responsibility of the Contractor.

B. Contractor Responsibilities:

1. Conduct examinations and tests specified in Contract documents. Coordinate sequence of activities to accommodate required examinations and tests with a minimum of delay. Conduct examinations, re-testing and re-examination, for construction that revised or replaced Work that failed to comply with requirements established by the Contract documents. Testing and examination requested by Contractor and not required by the Contract Documents are Contractor's responsibility.

C. Contractor Quality Control Procedure Requirements:

1. Not used.

1.6 BATTELLE VERIFICATION:

A. General: Battelle will perform acceptance verifications as identified in this and other Contract documents. Contractor shall ensure that Contractor personnel have completed inspections of, and approved portions of work in accordance with Contract requirements before notifying Battelle.

1. Specific verification points are defined as follows:

a. Hold (H): Required for witnessing of specific construction features, before further construction is allowed to proceed.
b. Receiving (R): Special items of fabrication, equipment, or material scheduled to be delivered to the Contract site, or other designated location, which require inspection upon arrival and before installation. Notify Battelle within one (1) working day after item arrival.
c. Witness (W): Selected for inspection at the option of Battelle. Work may proceed upon verbal release by Battelle or upon expiration of one hour beyond scheduled time of witnessing.

2. Notification Requirements: H, R, and W points apply to Hanford site work. Except where a longer period is specified notify Battelle at least four (4) working hours before each point for Hanford site work.
3. Schedule of H, R, and W points as applicable:

a. All Blind Penetrations (H)

b.	Initial installation of through penetration fire stopping	(H)
c.	All cleaning and flushing	(W)
d.	All testing (leak testing, in-service testing, shield testing, electrical testing)	(W)
e.	Energizing of circuits or equipment	(W)
f.	Inspection of electrical breakers before installation	(H)
g.	Final closure of electrical enclosures	(H)

PART 2 - PRODUCTS (Not Used)

PART 3 - EXECUTION

3.1 REPAIR AND PROTECTION

A. On completion of testing, inspecting, sample taking, and similar services, repair damaged construction and restore substrates and finishes.

B. Provide materials and comply with installation requirements specified in other Sections of these Specifications or on the drawings. Restore patched areas and extend restoration into adjoining areas in a manner that eliminates evidence of patching.

C. Protect construction exposed by or for inspection and testing activities.

D. Repair and protection are Contractor's responsibility, regardless of the assignment of responsibility for quality control services.

END OF SECTION 014000

SECTION 015000

TEMPORARY FACILITIES AND CONTROLS

PART 1 - GENERAL

1.1 SUMMARY

A. This Section includes requirements for temporary facilities and controls, including temporary utilities, support facilities, and security and protection facilities.

B. Temporary utilities include, but are not limited to, the following:

1. Water service and distribution.
2. Sanitary facilities, including toilets, wash facilities, and drinking-water facilities.
3. Heating and cooling facilities.
4. Ventilation.
5. Electric power service.
6. Lighting.

C. Support facilities include, but are not limited to, the following:

1. Temporary roads and paving.
2. Project identification and temporary signs.
3. Field offices.
4. Storage and fabrication sheds.
5. Lifts and hoists.
6. Construction aids and miscellaneous services and facilities.

D. Security and protection facilities include, but are not limited to, the following:

1. Environmental protection.
2. Site enclosure fence.
3. Security enclosure and lockup.
4. Barricades, warning signs, and lights.
5. Temporary enclosures.
6. Temporary partitions.
7. Fire protection.

1.2 USE CHARGES

A. Services furnished by Battelle: The Contractor will not be charged a cost or use fee for any temporary facilities, utilities or services supplied to the Contractor in the performance of this work by Battelle.

1.3 QUALITY ASSURANCE

A. Standards: Comply with ANSI A10.6, NECA's "Temporary Electrical Facilities," and NFPA 241, “Standard for Safeguarding Construction, Alteration & Demolition 0perations.

B. Tests and Inspections: Arrange for authorities having jurisdiction to test and inspect each temporary utility before use. Obtain required certifications and permits.

1.4 PROJECT CONDITIONS

A. Conditions of Use: The following conditions apply to use of temporary services and facilities by all parties engaged in the Work:

1. Keep temporary services and facilities clean and neat.

B. Relocate temporary services and facilities as required by progress of the Work.

PART 2 - PRODUCTS

2.1 MATERIALS and EQUIPMENT

A. Suitable for use intended: Provide materials and equipment suitable for use intended. In general, materials shall be new materials. Equipment shall be in good operating condition with current safety and operational checks performed.

1. Fire Extinguishers: Minimum 10 lbs ABC dry chemical.

B. Electrical Outlets: Properly configured, NEMA-polarized outlets to prevent insertion of 110- to 120-V plugs into higher-voltage outlets; equipped with ground-fault circuit interrupters, reset button, and pilot light.

C. Power Distribution System Circuits: Where permitted and overhead and exposed for surveillance, wiring circuits, not exceeding 125-V ac, 20-A rating, and lighting circuits may be nonmetallic sheathed cable.

D. Fire Retardant Plastic Sheeting: Materials shall meet the performance criteria of NFPA 701 Method 2 and the material containers shall be labeled to show compliance with the test criteria.

PART 3 - EXECUTION

3.1 INSTALLATION, GENERAL

A. Locate facilities where they will serve Project adequately and result in minimum interference with performance of the Work. Relocate and modify facilities as required.

B. Provide each facility ready for use when needed to avoid delay. Maintain and modify as required. Do not remove until facilities are no longer needed or are replaced by authorized use of completed permanent facilities.

3.2 TEMPORARY UTILITY INSTALLATION

A. Water Service: Use of Battelle's existing water service facilities will be permitted, as long as facilities are cleaned and maintained in a condition acceptable to Battelle. At Substantial Completion, restore these facilities to condition existing before initial use.

B. Sanitary Facilities: Use of Battelle's existing sanitary facilities will be permitted, as long as facilities are kept clean in a condition acceptable to Battelle.

C. Electric Power Service: Use of Battelle's existing electric power service will be permitted, as long as equipment is maintained in a condition acceptable to Battelle.

D. Electric Distribution: Provide receptacle outlets adequate for connection of power tools and equipment.

1. Provide waterproof connectors to connect separate lengths of electrical power cords if single lengths will not reach areas where construction activities are in progress. Do not exceed safe length-voltage ratio.
2. Provide metal conduit enclosures or boxes for wiring devices.

E. Lighting: Provide temporary lighting with local switching that provides adequate illumination for construction operations and traffic conditions.

1. Install and operate temporary lighting that fulfills security and protection requirements without operating entire system.

2. Telephone Service: Use personal cell phones. Access to existing building phones are provided for emergency use only.

3.3 SUPPORT FACILITIES INSTALLATION

A. Not used.

B. Temporary Roads and Paved Areas: Not Used.

C. Traffic Controls: Not Used.

D. Project Identification and Temporary Signs: Not Used.

E. Janitorial Services: Not Used.

F. Common-Use Field Office: Not used.

G. Storage and Fabrication Sheds: Contractor shall provide temporary storage facilities (Connex boxes, enclosed trailers) to store construction materials, tools, removed laboratory casework and materials to be reused, Storage facilities are to be located exterior to the 3410 building per the direction of the PNNL CM and Building Manager. Materials and tools may not be stored within the building lab or service corridors.

3.4 SECURITY AND PROTECTION FACILITIES INSTALLATION

A. Site Enclosure Fence: Not Applicable

B. Security Enclosure and Lockup: Not Applicable.

C. Barricades, Warning Signs, and Lights: Comply with standards and code requirements for erecting structurally adequate barricades. Paint with appropriate colors, graphics, and warning signs to inform personnel and public of possible hazard. Where appropriate and needed, provide lighting, including flashing red or amber lights.

1. For safety barriers, sidewalk bridges, and similar uses, provide minimum 5/8-inch- thick exterior plywood.

D. Temporary Partitions: Erect and maintain fire retardant dust control partitions and temporary enclosures to limit dust and dirt migration and to separate areas from fumes and noise, and for HVAC control, as required. Any materials used for temporary supports or temporary walls to support the rework of the structural "C" joist shield support ceiling are to be of fire retardant construction.

E. Temporary Fire Protection: Comply with NFPA 241.

1. Locate fire extinguishers where convenient and effective for their intended purpose; provide not less than one extinguisher on each floor at or near each usable stairwell.
2. Additional extinguishers may be needed for locations where open flame, torch cutting, welding or grinding operations are performed.
3. Store combustible materials in containers in fire-safe locations.
4. Maintain unobstructed access to fire extinguishers, fire hydrants, temporary fire-protection facilities, stairways, and other access routes for firefighting. Prohibit smoking in any Battelle buildings.
5. Supervise welding operations, combustion-type temporary heating units, and similar sources of fire ignition.

3.5 OPERATION, TERMINATION, AND REMOVAL

A. Maintenance: Maintain facilities in good operating condition until removal.

B. Termination and Removal: Remove each temporary facility when need for its service has ended or no later than Substantial Completion.

END OF SECTION 015000

SECTION 016000

ENVIRONMENTAL, SAFETY AND HEALTH

PART 1 - GENERAL

1.1 CONTRACTOR RESPONSIBILITY

A. The Contractor shall obtain all required permits for work to be performed. The Contractor shall assume full responsibility and liability for compliance with all applicable Codes, Standards, Regulations and Statutes pertaining to the environmental, health and safety of personnel during execution of the Work, and shall hold Battelle and the Government harmless for any action or omission on the Contractor's part, or that of the Contractor's employees or subcontractors, that results in fines, penalties, illness, injury or death.

B. Contractor Environment Safety and Health (CESH) Program: The Contractor shall comply with Battelle's 10CFR851 DOE approved Safety and Health Program and shall confirm in writing that it will adopt Battelle's CESH Program as its own. The Contractor shall download and utilize the current revision of the CESH Manual located at http://www.pnl.gov/contracts/esh-procedures/. Maintain one (1) copy of the CESH Manual at the job site for Contractor personnel reference.

C. The contractor shall download and utilize the latest revision of the following CESH referenced documents. Maintain one (1) set of all relevant documents and forms at the job site for Contractor and sub-tier personnel reference.

1. Hoisting and Rigging: Located at http://www.pnl.gov/contracts/hoist_rigging/.

2. Procedures and Policies: Located at http://www.pnl.gov/contracts/esh-procedures/
   a. Controlling Hot Work
   b. Electrical Work Safety
   c. Environment Protection
   d. Lockout/Tagout
   e. Occupational Medicine
   f. Personal Protective Equipment
   g. Prejob Planning
   h. Program Policy

3. Forms: Located at http://www.pnl.gov/contracts/esh-procedures/forms_index.asp
   a. Class II Penetration Permit
   b. Competent Person Designation
   c. Construction Supervisor Safety Inspection Checklist
   d. Daily Excavations/Trenches Safety Inspection Checklist and Inspection Log
   e. Electrical Energized Work Permit
   f. Fall Protection Work Plan
   g. HESP Arc Flash Calculator
   h. Job Safety Analysis
   i. Lock and Tag Logsheet
   j. Lockout/Tagout Inspection Form
   k. Lockout/Tagout Safety Mastercard

l. Lockout/Tagout Written Instruction Form
m. Management Removal of Lock and Tag
n. Orientation Checklist
o. Orientation Record
p. PNNL Contractor Employee Job Task Analysis Form
q. Periodic Inspection Checklist
r. Permit for Working with Open Flame, Welding, Cutting, or Grinding
s. Prejob Safety Planning Signoff
t. Preliminary Hazard Assessment Form
u. Safety Meeting Sign-in Roster
v. Scaffolds Inspection Checklist
w. Subcontractor Electrical Worker Qualification Form
x. Training Attendance Record
y. Weekly Safety Meeting Agenda

1.2 RELATED SECTION

A. Section 017600 – Environmental Protection and Waste Management.

1.3 COMPLIANCE WITH REGULATIONS

A. References: In addition to references in the Construction General Provisions, the following Codes, Standards, Regulations and Statutes designate and define hazardous materials and conditions, and establish procedures for handling these materials and conditions. Omission of any code, regulation, or statutory requirement in this section does not remove any obligation or legal requirement on the part of the Contractor to comply with all legal requirements for the location of the work.

1. Code of Federal Regulations (CFR)

   a. 10 CFR 851: Worker Safety and Health Program
   b. 29 CFR, Part 1910: Occupational Safety and Health Administration (OSHA) General Industry and Health Standards.
   c. 29 CFR, Part 1926: OSHA Construction Industry Standards.
   d. 40 CFR, Part 61: National Emission Standards for Hazardous Air Pollutants.
   e. 40 CFR, Part 261: Environmental Protection Agency (EPA) Characteristics of Hazardous Waste.
   f. 40 CFR, Part 761, EPA Polychlorinated Biphenyls (PCBs), Manufacturing, Processing, Distribution in Commerce and Use Prohibitions.
   g. 40 CFR, Part 763: EPA Asbestos.

2. Washington Administrative Code (WAC)

   a. Chapter 296-24 WAC, General Safety and Health Standards
   b. Chapter 296-27, Record Keeping and Reporting
   c. Chapter 296-36, Safety Standards – Compressed Air
   d. Chapter 296-45, Safety Standards for Electrical Workers
   e. Chapter 296-62, General Occupational Health Standards

f. Chapter 296-67, Safety Standards for Process Safety Management of Highly Hazardous Chemicals
g. Chapter 296-155, Safety Standards for Construction Work
h. Chapter 296-800, Safety and Health Core Rules
i. Chapter 173-303, Dangerous Waste Regulations

3. National Fire Protection Association (NFPA)
   a. NFPA 70, National Electric Code
   b. NFPA 70E, Standard for Electrical Safety in the Work Place
   c. NFPA 241 Standard for Safeguarding Construction Alteration and Demolition

1.4 SUBMITTALS

A. Letter of Confirmation: The Contractor shall submit a letter confirming it will adopt, and flow down to all sub-tiers, the Battelle CESH Program as its own for contract work.

B. Permits, Inspections, Tests, and Reports: The Contractor will provide copies to Battelle of all permits, inspections, tests, and reports required by the Work, Codes, Standards, Regulations and Statutes or the Environmental Safety and Health Program.

C. Job Safety Analysis (JSA): Contractor shall submit a JSA(s) that addresses work to be performed before commencing any work activities on Site.

D. Heavy Equipment: Prior to mobilizing heavy equipment on Site, submit a letter stating that Heavy Equipment brought on site meets all applicable federal and state safety codes and has been inspected by a qualified person. Specify if equipment is owned by contractor or rented. If rented, name the rental company.

E. Declaration of Key Supervisor(s). Key Supervisors include as a minimum the Contractors Jobsite Superintendent and the Site Safety Supervisor. Prior to on-Site work, Contractor shall declare its key supervisor(s) and submit documentation to demonstrate the individuals are adequately qualified to supervise the contract Work. The Site Safety Supervisor must meet the following minimum qualifications:
   1. Safety training in construction through seminars, workshops, conferences, educational courses, etc.
   2. 10-Hour OSHA Construction course
   3. Knowledge of CFR, Title 29, Part 1910, Occupational Safety and Health Standards
   4. Knowledge of CFR, Title 29, Part 1926, Safety and Health Regulations for Construction
   5. Knowledge of CRF, Title 10, Part 851, Worker Safety and Health Program

F. Crane Operator Certification: Not used

G. Hoisting and Rigging: Submit qualifications/training records of individuals that will be engaged in hoisting and rigging activities before allowing individuals to perform hoisting and rigging activities on Site.

H. Lift Plan: Submit Lift Plan(s) for review as required prior to lifting.

I. Forklift Operator Qualifications: Submit qualifications/training records for operators of forklifts prior to using forklifts on Site.

J. Electrical Worker Qualifications: Submit a valid Washington State Electrician Journeyman Certificate for individuals performing electrical work.

1.5 KEY SUPERVISOR(s)

A. Jobsite Superintendent

1. The Jobsite Superintendent shall be present on site during the performance of all fieldwork to oversee and coordinate the daily work activities. The Jobsite Superintendent shall be identified as the designated line management representative responsible for Contractor and sub-tier contractor's employees and empowered by Contractor to take immediate action to correct unsafe conditions/acts, and other deficiencies identified during inspections.

2. The Jobsite Superintendent shall have a thorough knowledge of construction industry safety standards established by Federal and State regulations and shall provide documentation that they have attended a 10 hour OSHA Construction Course. This individual shall have the authority and responsibility to identify and correct hazardous and unsafe conditions, acts and non-compliances.

3. The Jobsite Superintendent shall ensure that the Site Safety Supervisor is fully engaged and empowered to oversee and implement the CESH Program requirements.

4. Copies of the following documents shall be maintained at the jobsite for Battelle review; safety inspections, employee orientations, employee training records, weekly and monthly safety meeting records, equipment inspections, and competent person designations.

B. Site Safety Supervisor.

1. The designated Site Safety Supervisor(s) must be on site during the performance of all fieldwork and shall be responsible for oversight of Contractor's and sub-tier contractor's implementation of the CESH Program.

2. Contractor's Site Safety Supervisor(s) shall be responsible for implementation of the CESH Program and ensuring job-site safety requirements and procedures are being accomplished, to include: conducting employee training; performing safety inspections of work; conducting weekly safety meetings with craft and sub-tier employees; and providing monthly report to Battelle documenting safety activities. The Safety Representative will also be responsible for a continuing survey/trending analysis of Contractor's operations, to ensure that probable causes of injury and accident are controlled and the operating equipment, and facilities are used, inspected, and maintained as required by applicable safety and health regulations.

3. The Safety Supervisor designation and responsibility may be shared with responsibilities and designation of the Contractors Jobsite Superintendent if the Jobsite Superintendent meets the minimum Safety Supervisor qualification requirements.

1.6 SAFE WORK COMMUNICATION

A. Incorporating Battelle Job Planning Package: Battelle will provide the Contractor with a Battelle Job Planning Package (JPP). The JPP may provide additional information regarding the phases of work to be performed, permits, training/qualifications, special tools or materials, pre- and post-notification requirements, pre- and post-job meetings, system/equipment configuration

and verification, outages, waste disposal, and environmental and/or worker safety hazards. The JPP shall be incorporated directly, or by reference, into the Contractor's work plan.

B. Preconstruction Safety Meeting: Prior to commencing construction, representatives of the Contractor's management, including the Jobsite Superintendent, Site Safety Supervisor, and the Subcontractors shall meet with Battelle to evaluate hazards associated with the Work and establish ES&H standards and requirements which if properly implemented, provide adequate assurance that employees, the public, and the environment are protected from adverse consequences.

1. The CESH Manual shall be reviewed and applicable sections pertinent to the Work shall be discussed.

2. The Contractor shall advise Battelle of any special safety restrictions it has established so that Battelle and other Project or Site personnel can be notified of these restrictions.

3. No later than three (3) calendar days after the Preconstruction Safety Meeting, the Contractor shall distribute minutes of the meeting to Battelle for information and record.

4. Battelle and the Contractor shall walk down the construction site prior to commencing work.

C. Pre-Job Briefing: Prior to commencing construction, and as required throughout the period of performance, the Battelle Construction Manager and Contractor's Site Safety Supervisor shall conduct a pre-job briefing. The briefing shall incorporate feedback and participation of all workers to confirm that all parties understand the work scope, hazards, mitigations and expectations. Briefing content and attendance shall be documented and retained on site.

1. At a minimum the initial briefing shall include:
   a. Scope of the work to be performed.
   b. Hazards and mitigation of those hazards.
   c. Required work procedures.
   d. Emergency response, including communications and actions taken to confirm that emergency routes remain clear throughout the job.
   e. Personnel roles, responsibilities, required training and work restrictions.
   f. Documentation administration.

2. When any of the following conditions exist an additional briefing shall be conducted. Only the items or activities affected need be discussed.
   a. A change in area or facility conditions that may affect the safety of employees, public or environment.
   b. Work scope has changed from the initial briefing.
   c. Hazards or risks have changed or additional information has become available that clarifies previously indeterminate or different assumptions.
   d. Personnel assignments have changed or new personnel are added.
   e. Work has stopped long enough to create confusion when the work is resumed.
   f. Activity has stopped or has been shutdown for a period of greater than seven consecutive days.
   g. An additional briefing is requested by Battelle, the Contractor or a sub-tier contractor.

D. Monthly Safety Meeting: Contractor's Site Safety Supervisor shall conduct a monthly meeting with Contractor employees (including subcontractors) to review work hazards and controls, and to address particular requirements associated with work in progress and work upcoming. The meeting may also be used for training to applicable requirements identified in the CESH Manual. Contractor shall record minutes of the meeting and transmit to Battelle for information and record along with signed roster of the individuals in attendance.

E. Weekly Safety Meeting: Each Contractor (or Subcontractor) shall conduct a weekly safety meeting with their employees to review work hazards and controls, and to address particular requirements associated with work in progress and work upcoming. The meeting may also be used for training to applicable requirements identified in the CESH Manual. Contractor shall record minutes of the meeting and transmit to Battelle for information and record along with signed roster of the individuals in attendance.

F. Employee Orientation: All new employees to the project shall be required to attend an initial orientation given by the Contractor's Site Safety Supervisor. This orientation shall include the site specific safety requirements (i.e. training, JSA, injury reporting, emergency contact number, JPP, etc.). Minimum Personal Protective Equipment (PPE) requirements for employees to work on Site include: safety glasses, ankle high hard toed boots and high visibility vests or clothing.

G. Tool Box Meeting: Contractor's Site Safety Supervisor shall conduct and document a daily "Tool Box" meeting to review specific work operations to be performed that day, ensure that the Job Hazard Analysis adequately addresses hazards and controls, and that employees possess adequate knowledge of the requirements to perform the work. Documentation shall include subjects discussed and documented attendance at a minimum. Retain documentation records on Site.

H. Job Safety Analysis: All work sequences, steps and processes shall be evaluated for the hazards the activity presents to employees, systems, services, buildings, structures and/or the environment, and shall provide tools, controls and adequate training to perform such work safely. Contractor shall document the analysis of identified hazards and the subsequent worker notification and training. Dependant on the Contractor's approach to the executing the work items addressed in the JSA shall include as required, but not be limited to the following;

1. Barricades and Signs
2. Fire Prevention
3. Hazardous Materials and Communication
4. Concrete Health Hazards
5. Hoisting and Rigging
6. Fall Protection
7. Confined Space Entry
8. Ladders
9. Painting
10. Power and Hand Tools
11. Welding and Cutting
12. Heat/Cold Stress
13. Personal Protective Equipment
14. Aerial Lifts

15. Scaffolds
16. Lockout/Tagout
17. Electrical Safety
18. Stop Work Authority
19. System Outages (utilities, fire protection, & communications)
20. Respiratory Protection
21. Mechanized Equipment
22. Excavation
23. Pressure Testing
24. Steel Erection
25. Abrasive Blasting
26. Asbestos
27. Beryllium
28. Lead

1.7 GENERAL TRAINING (BY CONTRACTOR)

A. The Contractor is required to provide proof of training/certification for employees whose work/job description would require the following safety training courses. Required training is dependant on the Contractor's approach to executing the work. The training listed below is to be provided by the Contractor, and is solely at the Contractor's expense:

1. Aerial Lift Operator Training
2. Crane Operation
3. Rigging – Initial and Advanced
4. Heavy Equipment Operation
5. Electrical Worker Safety Training
6. Fall Protection Training
7. Forklift Training
8. Scaffolding Erector
9. Scaffolding Inspector
10. Scaffolding User
11. Ladder Safety
12. Confined Space Training
13. Powder Actuated Fastener Training
14. Excavation Competent Person Training
15. Hazard Communication
16. Hot Work Fire Watch
17. Hot Work Permit
18. Fire Extinguisher
19. First Aid Provider
20. Hearing Protection
21. Blood Borne Pathogens

22. Personnel Protective Equipment
23. Respiratory Protection
24. Beryllium
25. Certified Asbestos Worker
26. Lead Worker

1.8 EMERGENCY NOTIFICATIONS

A. Post emergency first aid information and Battelle and Hanford Site emergency Telephone Numbers at the work site.

ON-SITE Emergency (Police/Fire/Rescue/Hazmat) .....(509) 375-2400

OFF-SITE Emergency (Police/Fire/Rescue/Hazmat).....Dial 911

1.9 MEDICAL FIRST AID

A. Contractor shall have on-site capability to treat minor first aid, non-emergency events. Contractor shall be responsible to coordinate with a qualified medical provider for any required first line medical attention, beyond minor first aid cases.

B. Medical Provider: The Contractor will establish and provide comprehensive occupational medical services to its employees and each of its lower-tier employees as described in the Construction General Provisions.

1.10 EMERGENCY SUSPENSION OF WORK

A. When notified of non-compliance with the safety or health provisions of the Contract, immediately correct the unsafe or unhealthy condition.

1. If the Contractor fails to comply promptly, all or part of the work will be stopped by notice from Battelle.

2. When, in the opinion of and by notice given by Battelle, the Contractor has taken satisfactory corrective action, work may resume.

3. The Contractor shall not be allowed any extension of time or compensation for damages in connection with a work stoppage for an unsafe or unhealthy condition.

1.11 PROTECTION OF PERSONNEL AND EQUIPMENT

A. Take all necessary precautions to prevent injury to Contractor employees, Battelle, the public, or damage to property of others or the environment. The public includes all persons not employed by the Contractor or a subcontractor.

PART 2 - PRODUCTS (not used)

PART 3 - EXECUTION

3.1 EMERGENCY RESPONSE

A. Battelle will provide emergency response for situations arising on the Site as noted in paragraph 1.7.A above. All injuries, accidents and incidents shall be reported to Battelle's Construction Manager, including fires that are extinguished without causing damage.

3.2 INTEGRATED SAFETY MANAGEMENT SYSTEM

A. Consistent with the requirements of 10 CFR 851, It is Battelle's expectation that Contractors and their Subcontractors will plan and perform work in accordance with Integrated Safety Management System principles – workers participating in work planning: identifying hazards and proposed controls, methods of performing work, and providing feedback at job task completion. Contractor shall provide evidence of using these work planning principles upon request.

3.3 DAILY WORK PLANNING

A. The Contractor is expected to brief all employees and subcontractor employees daily on the work activities and associated hazards planned for each day. This is best accomplished by supervisors meeting prior to the morning pre-job briefing and coordinating and planning interdisciplinary work activities and then passing the information on to the general employees at their pre-job briefing.

3.4 EXCAVATION

A. Daily inspections of excavation, the adjacent areas, and protective systems will be made by a competent person for evidence of a situation that could result in possible cave-ins, indications of failure of protective systems, hazardous atmospheres, or other hazardous conditions. An inspection shall be conducted by the competent person prior to the start of work and as needed throughout the shift. Inspections must also be made after every rainstorm or other hazard-increasing occurrence if employee exposure can be reasonably anticipated.

B. The location of utility installations, such as sewer, telephone, fuel, electric, water lines, or any other underground installations that reasonably may be expected to be encountered during excavation work, must be located prior to performing excavation work. Obtain an excavation permit from Battelle's Construction Manager.

C. The exact location(s) of the underground utilities must be determined by safe and acceptable means.

D. Field markings that identify utility locations must be maintained throughout excavation activities.

E. Excavate by hand within a 5-foot radius of a known or suspected underground utility. Use a non-conductive shovel or vacuum-excavation within a 5-foot radius of an energized, direct-buried cable. Wear protective, insulated gloves, rated for the potential voltage when working near energized cables.

F. While the excavation is open, the underground utilities must be protected, supported, or removed as necessary.

G. The area of the excavation shall be appropriately barricaded and controlled to prevent unauthorized or inadvertent access.

3.5 SAFETY INSPECTIONS

A. Daily Safety Inspection: The Contractor Site Safety Supervisor shall document a daily walk-through safety inspection.

B. Weekly Safety Inspection: The Contractor and its subcontractors shall conduct a weekly work site safety inspection. Participants for the walk-through include the Site Safety Supervisor, Jobsite Superintendent, other Contractor/Subcontractor management and representative craft employees. Schedule and provide notification such that the Battelle Construction Manager may participate.

3.6 WORKER SAFETY – WEATHER CONDITIONS

A. To insure worker safety, work or portions of work may be temporarily and incrementally shut down due to high winds, lighting, or other inclement weather as determined by Battelle. Contractor will not be additionally compensated in terms of cost or schedule for weather related shutdowns. Battelle will issue weather warnings via radio, telephone, public announcement, or in person. The Contractor shall ensure that all contractor and subcontractor personnel are apprised of the warnings and take the required actions as stated below.

1. Contact 375-2124 and/or monitor local radio stations for inclement weather closure and delay information before reporting to site. During inclement weather delay or closure conditions the Contractor shall not proceed with the work without authorization by the Construction Manager.

2. Sustained winds greater than 15 mph – the necessity for crane operations will be closely scrutinized.

3. Sustained winds greater than 25 mph and/or gusts greater than 40 mph – all crane activities must cease and be secured. All loose outdoor material shall be secured. The Contractor's safety representative shall evaluate work on roofs or elevated work surfaces before continuing. All personnel working outdoors are required to wear safety goggles. Depending on dust hazards, work may be stopped. Personnel may be directed to shelter.

4. Sustained winds greater than 30 mph and/or gusts greater than 45 mph – all outdoor work activities may be stopped. Personnel may be directed to shelter.

5. Sustained winds greater than 50 mph – outdoor work activities will be curtailed and limited to those approved by Battelle and Contractor's Safety Representative. Personnel will be directed to shelter. Site closure may be implemented and all work activities ceased.

6. Thunderstorm/lighting advisory based on lighting activity within a 30 mile radius of the Site – Contractor personnel shall not work on roofs or elevated surfaces. Personnel shall stay away from equipment such as drilling rigs, cranes, boom trucks, or elevated work platforms. These protective measures shall remain in place until Battelle cancels the warning.

7. Contractor shall be responsible to provide snow removal and ensure safe walking and transfer conditions for walkways and access points around all Site offices and work areas and the job-site within the project boundaries.

8. In response to winter storm conditions, Battelle may close the Site. If so, Battelle will make appropriate announcements and coordinate closures or early dismissals.

3.7 HOISTING AND RIGGING

A. Contractor shall comply with the PNNL Hoisting and Rigging Manual.

B. Lift Plan Determination: Battelle will make determinations as to when a "lift" requires a "Lift Plan". A lift would require a Lift Plan under any of the following circumstances:

1. If the item being lifted were to be damaged or upset, it could result in a release of hazardous material to the environment which would exceed the established Permissible Environmental Limits (PEL).

2. The item being lifted is unique and, if damaged, would be irreplaceable or not repairable and is vital to a system, facility, or project operation.

3. The cost to replace or repair the item being lifted, or the delay in operations of having the item damaged would have a negative impact on facility, organizational, or budget to the extent that it would affect program commitments.

4. The item, although non-critical, is to be lifted above or in close proximity to a critical item or component.

5. The load being lifted is 95% or more of a crane's chart rating for the maximum radius that will be experienced.

6. Two mobile cranes are lifting the load and the load share equals more than 70% of one crane's chart rating for the maximum radius that will be experienced.

7. To ensure safe working conditions, Battelle may determine that any lift could require a Lift Plan.

3.8 HAZARDOUS SUBSTANCES

1. Asbestos: Asbestos containing materials (ACM) may be encountered during the course of work. The Contractor shall communicate the potential hazard to all workers and require all workers to attend Course No. 664 *Hazard Communication: Asbestos Awareness*. ACM may be identified, unidentified, concealed or contained within building materials. Should Contractor or sub-tier personnel encounter suspected ACM contact the Battelle Construction Manager immediately. Do not proceed with any work that may disturb ACM without direction. Asbestos and ACM shall only be removed and disposed of in strict accordance with State and Federal Regulations.

2. Lead: The Workplace Exposure Assessment (WEA) may identify the potential to encounter lead based coatings on surfaces such as supports, structural steel, walls and tanks. Where lead is present the Contractor shall initially assess if employees will be exposed above the action level of 30 ug/m(3). Where the exposure assessment indicates

that employee exposures will exceed the action level the contractor shall comply with the provisions of the lead standard.

3. Beryllium: The Workplace Exposure Assessment (WEA) may identify areas within the jobsite subject to the requirements of the PNNL Beryllium Screening Program due to potential legacy beryllium contamination. Prior to performing any work in these areas or performing invasive work in uncharacterized spaces such as demolition, cutting, equipment removal and work in ceiling spaces these area must be evaluated for potential exposures to beryllium by PNNL. The contractor shall notify the PNNL Construction Manager 14 days prior to performing work in any area that has not been characterized. The Contractor and its sub-tiers shall follow the PNNL Chronic Beryllium Disease Prevention Program when potential beryllium exposures may exceed the PNNL administrative control level (ACL) of 0.01 $\mu g/m^3$. Any exposures that are anticipated to exceed the ACL require trained and medically qualified workers. PNNL policy requires the use of beryllium-assigned workers when uncharacterized activities involving potential beryllium exposure are performed. Exposures exceeding the DOE action level of 0.2 $\mu g/m^3$ will trigger the control measures specified in 10 CFR 850.23(b). PNNL will pay for the worker Beryllium Occupational Medical Examination as specified in 10 CFR 850. The site Occupational Medical Provider will perform those occupational medical activities.

END OF SECTION 016000

SECTION 017000

ENGINEERING, LAYOUT AND INSTALLATION

PART 1 - GENERAL

1.1 SUMMARY

A. This Section includes general procedural requirements governing execution of the Work including, but not limited to, the following:

1. Construction layout.
2. Field engineering and surveying.
3. General installation of products.
4. Coordination of Battelle-installed products.
5. Progress cleaning.
6. Starting and adjusting.
7. Protection of installed construction.
8. Correction of the Work.

1.2 SUBMITTALS

A. See Submittal Schedule on drawings for technical submittals. Administrative submittals included in Section 013000 Administrative Requirements.

1.3 QUALITY ASSURANCE

A. See Section 0140000.

PART 2 - PRODUCTS (Not Used)

PART 3 - EXECUTION

3.1 EXAMINATION

A. Existing Conditions: The existence and location of site improvements, utilities, and other construction indicated as existing are not guaranteed. Before beginning work, investigate and verify the existence and location of mechanical and electrical systems and other construction affecting the Work.

1. Before construction, verify the location and points of connection of utility services.

B. Existing Utilities: The existence and location of utilities and construction indicated as existing are not guaranteed. Before beginning site-work, investigate and verify the existence and location of utilities and other construction affecting the Work.

C. Acceptance of Conditions: Examine substrates, areas, and conditions, with Installer or Applicator present where indicated, for compliance with requirements for installation tolerances and other conditions affecting performance. Record observations.

1. Written Report: Where a written report listing conditions detrimental to performance of the Work is required by other Sections, include the following:

   a. Description of the Work.
   b. List of detrimental conditions, including substrates.
   c. List of unacceptable installation tolerances.
   d. Recommended corrections.

2. Verify compatibility with and suitability of substrates, including compatibility with existing finishes or primers.
3. Examine roughing-in for mechanical and electrical systems to verify actual locations of connections before equipment and fixture installation.
4. Examine walls, floors, and roofs for suitable conditions where products and systems are to be installed.
5. Proceed with installation only after unsatisfactory conditions have been corrected.
6. Proceeding with the Work indicates acceptance of surfaces and conditions.

3.2 PREPARATION

A. Service Interruptions: Do not interrupt utilities serving facilities occupied by Battelle or others unless permitted under the following conditions and then only after arranging to provide temporary utility services according to requirements indicated:

1. Notify Battelle not less than five (5) working days in advance of proposed utility interruptions.
2. Do not proceed with utility interruptions without Battelle's written permission.

B. Field Measurements: Take field measurements as required to fit the Work properly. Recheck measurements before installing each product. Where portions of the Work are indicated to fit to other construction, verify dimensions of other construction by field measurements before fabrication. Coordinate fabrication schedule with construction progress to avoid delaying the Work.

C. Space Requirements: Verify space requirements and dimensions of items shown diagrammatically on Drawings.

D. Review of Contract Documents and Field Conditions: Immediately on discovery of the need for clarification of the Contract Documents, submit a Request for Information to Battelle. Include a detailed description of problem encountered, together with recommendations for changing the Contract Documents.

3.3 CONSTRUCTION LAYOUT

A. Verification: Before proceeding to lay out the Work verify layout information shown on Drawings. If discrepancies are discovered, notify Battelle promptly.

3.4 FIELD ENGINEERING

A. Not used.

3.5 INSTALLATION

A. General: Locate the Work and components of the Work accurately, in correct alignment and elevation, as indicated.

1. Make vertical work plumb and make horizontal work level.
2. Where space is limited, install components to maximize space available for maintenance and ease of removal for replacement.
3. Conceal pipes, ducts, and wiring in finished areas, unless otherwise indicated.

B. Comply with manufacturer's written instructions and recommendations for installing products in applications indicated.

C. Install products at the time and under conditions that will ensure the best possible results. Maintain conditions required for product performance until Substantial Completion.

D. Conduct construction operations so no part of the Work is subjected to damaging operations or loading in excess of that expected during normal conditions of occupancy.

E. Tools and Equipment: Do not use tools or equipment that produce harmful noise levels.

F. Anchors and Fasteners: Provide anchors and fasteners as required to anchor each component securely in place, accurately located and aligned with other portions of the Work.

1. Mounting Heights: Where mounting heights are not indicated, mount components at heights directed by Battelle.
2. Allow for building movement, including thermal expansion and contraction.

G. Joints: Make joints of uniform width. Where joint locations in exposed work are not indicated, arrange joints for the best visual effect. Fit exposed connections together to form hairline joints.

H. Hazardous Materials: Use products, cleaners, and installation materials that are not considered hazardous.

3.6 BATTELLE-INSTALLED PRODUCTS

A. Not Applicable.

3.7 PROGRESS CLEANING

A. General: Clean Project site and work areas daily, including common areas. Coordinate progress cleaning for joint-use areas where more than one installer has worked. Enforce requirements strictly. Dispose of materials lawfully.

1. Comply with requirements in NFPA 241 for removal of combustible waste materials and debris.
2. Do not hold materials more than 7 days during normal weather or 3 days if the temperature is expected to rise above (80 deg F).
3. Containerize hazardous and unsanitary waste materials separately from other waste. Mark containers appropriately and dispose of legally, according to regulations.

B. Site: Maintain Project site free of waste materials and debris.

C. Work Areas: Clean areas where work is in progress to the level of cleanliness necessary for proper execution of the Work.

1. Remove liquid spills promptly.
2. Where dust would impair proper execution of the Work, broom-clean or vacuum the entire work area, as appropriate.

D. Installed Work: Keep installed work clean. Clean installed surfaces according to written instructions of manufacturer or fabricator of product installed, using only cleaning materials specifically recommended. If specific cleaning materials are not recommended, use cleaning materials that are not hazardous to health or property and that will not damage exposed surfaces.

E. Concealed Spaces: Remove debris from concealed spaces before enclosing the space.

F. Exposed Surfaces: Clean exposed surfaces and protect as necessary to ensure freedom from damage and deterioration at time of Substantial Completion.

G. Cutting and Patching: Clean areas and spaces where cutting and patching are performed. Completely remove paint, mortar, oils, putty, and similar materials.

1. Thoroughly clean piping, conduit, and similar features before applying paint or other finishing materials. Restore damaged pipe covering to its original condition.

H. Waste Disposal: Burying or burning waste materials on-site will not be permitted. Washing waste materials down sewers or into waterways will not be permitted.

I. Protective Coatings: Apply protective covering where required to ensure protection from damage or deterioration at Substantial Completion.

J. Completed Work: Clean and provide maintenance on completed construction as frequently as necessary through the remainder of the construction period. Adjust and lubricate operable components to ensure operability without damaging effects.

K. Limiting Exposures: Supervise construction operations to assure that no part of the construction, completed or in progress, is subject to harmful, dangerous, damaging, or otherwise deleterious exposure during the construction period.

3.8 STARTING AND ADJUSTING

A. Perform specified tests and verifications.

3.9 PROTECTION OF INSTALLED CONSTRUCTION

A. Provide final protection and maintain conditions that ensure installed Work is without damage or deterioration at time of Substantial Completion.

B. Comply with manufacturers written instructions for temperature and relative humidity.

3.10 CORRECTION OF THE WORK

A. Repair or remove and replace defective construction. Restore damaged substrates and finishes.

1. Repairing includes replacing defective parts, refinishing damaged surfaces, touching up with matching materials, and properly adjusting operating equipment.

B. Restore permanent facilities used during construction to their specified condition.

C. Remove and replace damaged surfaces that are exposed to view if surfaces cannot be repaired without visible evidence of repair.

D. Repair components that do not operate properly. Remove and replace operating components that cannot be repaired.

E. Remove and replace chipped, scratched, and broken glass or reflective surfaces.

END OF SECTION 017000

SECTION 017320

SELECTIVE DEMOLITION

PART 1 - GENERAL

1.1 SUMMARY

A. This Section includes the following:

1. Demolition and removal of selected portions of building or structure.
2. Demolition and removal of selected site elements.
3. Salvage of existing items to be reused or recycled.

1.2 DEFINITIONS

A. Remove: Detach items from existing construction and legally dispose of them off-site, unless indicated to be removed and salvaged or removed and reinstalled.

B. Remove and Salvage: Detach items from existing construction and deliver them to Battelle.

C. Remove and Reinstall: Detach items from existing construction, prepare them for reuse, and reinstall them where indicated.

D. Existing to Remain: Existing items of construction that are not to be removed and that are not otherwise indicated to be removed, removed and salvaged, or removed and reinstalled.

1.3 MATERIALS OWNERSHIP

A. All materials and equipment except as specified elsewhere shall be retained by the Contractor for disposal and recycling.

1.4 SUBMITTALS:

A. Refer to Section 017600, Construction and Demolition Waste Recycling

1.5 QUALITY ASSURANCE

A. Regulatory Requirements: Comply with governing EPA notification regulations before beginning selective demolition. Comply with hauling and disposal regulations of authorities having jurisdiction.

B. Standards: Comply with ANSI A10.6 and NFPA 241.

C. Pre-demolition Conference:

1. Not used.

1.6 PROJECT CONDITIONS

A. Battelle will occupy portions of building immediately adjacent to selective demolition area. Conduct selective demolition so Battelle's operations will not be disrupted.

1. Comply with requirements specified in Division 1 Section 011000 "Summary of Work."

B. Conditions existing at time of inspection for bidding purpose will be maintained by Battelle to the extent practical.

C. Notify Battelle of discrepancies between existing conditions and Drawings before proceeding with selective demolition.

D. Hazardous Materials: Hazardous materials may be present in construction to be selectively demolished. Examine the WEA to become aware of locations where hazardous materials may be present.

1. Do not disturb hazardous materials or items suspected of containing hazardous materials except as specified within the Contract documents and Contractor Job Safety Analysis.

2. Hazardous materials, or items suspected of containing hazardous materials, shall be handled and disposed of in strict accordance with the Contract Documents and the approved Contractor Job Safety Analysis.

3. If known or suspected hazardous materials are unexpectedly discovered do not disturb. Immediately contact the Construction Manager for direction. Do not proceed with the work

E. Storage or sale of removed items or materials on-site is not permitted.

F. Utility Service: Maintain existing utilities and building systems indicated to remain in service and protect them against damage during selective demolition operations.

1. Maintain fire-protection facilities in service during selective demolition operations.
2. Comply with requirements for existing services/systems interruptions.

1.7 WARRANTY

A. Existing Warranties: Remove, replace, patch, and repair materials and surfaces cut or damaged during selective demolition, by methods and with materials so as not to void existing warranties.

PART 2 - PRODUCTS (Not Used)

PART 3 - EXECUTION

3.1 EXAMINATION

A. Verify that utilities have been disconnected and capped.

B. Survey existing conditions and correlate with requirements indicated to determine extent of selective demolition required.

C. Inventory and record the condition of items to be removed and reinstalled and items to be removed and salvaged.

D. When unanticipated mechanical, electrical, or structural elements that conflict with intended function or design are encountered, investigate and measure the nature and extent of conflict. Promptly notify the Battelle Construction Manager and submit a written Request for Information. Do not proceed with work when changed conditions are discovered or suspected.

E. Survey of Existing Conditions: Record existing conditions by use of measured drawings, pre-construction photographs and/or pre-construction videotapes.

1. Before selective demolition or removal of existing building elements that will be reproduced or duplicated in final Work, make permanent record of measurements, materials, and construction details required to make exact reproduction.

F. As the Work progresses implement controls to prevent hazards resulting from selective demolition activities.

3.2 UTILITY SERVICES AND MECHANICAL/ELECTRICAL SYSTEMS

A. Existing Services/Systems: Maintain services/systems indicated to remain and protect them against damage during selective demolition operations.

1. Comply with requirements for existing services/systems interruptions.

B. Service/System Requirements: Locate, identify, disconnect, and seal or cap off indicated utility services and mechanical/electrical systems serving areas to be selectively demolished.

1. Battelle will arrange to shut off indicated services/systems when requested by Contractor.
2. Arrange to shut off indicated utilities in accordance with Battelles CESH Manual.
3. If services/systems are required to be removed, relocated, or abandoned, before proceeding with selective demolition provide temporary services/systems that bypass area of selective demolition and that maintain continuity of services/systems to other parts of building.
4. Cut off pipe or conduit in walls or partitions to be removed. Cap, valve, or plug and seal remaining portion of pipe or conduit after bypassing.

a. Where entire wall is to be removed, existing services/systems may be removed with removal of the wall.

3.3 PREPARATION

A. Site Access and Temporary Controls: Conduct selective demolition and debris-removal operations to ensure minimum interference with roads, streets, walks, walkways, and other adjacent occupied and used facilities.

1. Comply with requirements for access and protection specified in Division 1 Section 015000 "Temporary Facilities and Controls."

B. Temporary Facilities: Provide temporary barricades and other protection required to prevent injury to people and damage to adjacent buildings and facilities to remain.

1. Provide protection to ensure safe passage of people around selective demolition area and to and from occupied portions of building.
2. Provide temporary weather protection, during interval between selective demolition of existing construction on exterior surfaces and new construction, to prevent water leakage and damage to structure and interior areas.
3. Protect walls, ceilings, floors, and other existing finish work that are to remain or that are exposed during selective demolition operations.
4. Cover and protect furniture, furnishings, and equipment that have not been removed.
5. Comply with requirements for temporary enclosures, dust control, heating, and cooling specified in Division 1 Section 015000 "Temporary Facilities and Controls."

C. Temporary Shoring: Provide and maintain shoring, bracing, and structural supports as required to preserve stability and prevent movement, settlement, or collapse of construction and finishes to remain, and to prevent unexpected or uncontrolled movement or collapse of construction being demolished.

1. Strengthen or add new supports when required during progress of selective demolition.

3.4 SELECTIVE DEMOLITION, GENERAL

A. General: Demolish and remove existing construction only to the extent required by new construction and as indicated. Use methods required to complete the Work within limitations of governing regulations and as follows:

1. Proceed with selective demolition systematically, from higher to lower level. Complete selective demolition operations above each floor or tier before disturbing supporting members on the next lower level.
2. Neatly cut openings and holes plumb, square, and true to dimensions required. Use cutting methods least likely to damage construction to remain or adjoining construction. Use hand tools or small power tools designed for sawing or grinding, not hammering and chopping, to minimize disturbance of adjacent surfaces. Temporarily cover openings to remain.

3. Cut or drill from the exposed or finished side into concealed surfaces to avoid marring existing finished surfaces. Observe requirements provided in the Battelle JPP regarding blind penetration work control process.
4. Do not use cutting torches until work area is cleared of flammable materials and Hot Work Permit is obtained from Battelle CM. At concealed spaces, such as duct and pipe interiors, verify condition and contents of hidden space before starting flame-cutting operations. Maintain fire watch and portable fire-suppression devices during flame-cutting operations.
5. Maintain adequate ventilation when using cutting torches.
6. Remove decayed, vermin-infested, or otherwise dangerous or unsuitable materials and promptly dispose of off-site.
7. Remove structural framing members and lower to ground by method suitable to avoid free fall and to prevent ground impact or dust generation.
8. Locate selective demolition equipment and remove debris and materials so as not to impose excessive loads on supporting walls, floors, or framing.
9. Dispose of demolished items and materials promptly.

B. Removed and Salvaged Items:

1. Clean salvaged items.
2. Pack or crate items after cleaning. Identify contents of containers.
3. Store items in a secure area until delivery to Battelle.
4. Transport items to Battelle's storage area designated by Battelle.
5. Protect items from damage during transport and storage.

C. Removed and Reinstalled Items:

1. Clean and repair items to functional condition adequate for intended reuse. Paint equipment to match new equipment.
2. Pack or crate items after cleaning and repairing. Identify contents of containers.
3. Protect items from damage during transport and storage.
4. Reinstall items in locations indicated. Comply with installation requirements for new materials and equipment. Provide connections, supports, and miscellaneous materials necessary to make item functional for use indicated.

D. Existing Items to Remain: Protect construction indicated to remain against damage and soiling during selective demolition. When permitted by Battelle, items may be removed to a suitable, protected storage location during selective demolition and reinstalled in their original locations after selective demolition operations are complete.

3.5 DISPOSAL OF DEMOLISHED MATERIALS

A. General: Except for items or materials indicated to be recycled, reused, salvaged, reinstalled, or otherwise indicated to remain Battelle's property, remove demolished materials from Project site and legally dispose of them in a Battelle-approved landfill.

1. Do not allow demolished materials to accumulate on-site.
2. Remove and transport debris in a manner that will prevent spillage on adjacent surfaces and areas.

3. Remove debris from elevated portions of building by chute, hoist, or other device that will convey debris to grade level in a controlled descent.

B. Burning: Do not burn demolished materials.

C. Disposal: Transport demolished materials off Battelle's property and legally dispose of them.

3.6 CLEANING

A. Clean adjacent structures and improvements of dust, dirt, and debris caused by selective demolition operations. Return adjacent areas to condition existing before selective demolition operations began.

END OF SECTION 017320

SECTION 017500A

WORK IN RADIOLOGICAL BUFFER AREAS

PART 1 - GENERAL

A. SUMMARY

1. This section includes the requirements for decontamination, demolition, and remodeling activities in Radiological Controlled Areas (RCA) or on radioactive items/equipment.
2. Work on surfaces in an area with little or no potential to generate airborne radioactivity or to require entry into posted contamination and/or airborne radioactivity areas.

B. RADIOLOGICAL PROTECTION PROGRAM OVERVIEW

1. The Battelle Radiation Protection Program (RPP), which is approved by the Department of Energy (DOE), implements the requirements of 10 CFR Part 835,"Occupational Radiation Protection; Final Rule," for all activities on the Site that cause, or could cause, occupational radiation exposure from radioactive materials or radiation-producing devices. All work performed on the project will be in accordance with Battelle's RPP.
2. The Contractor shall comply with the Battelle RPP. This includes ensuring that Contractor personnel are trained and perform their job duties within the confines of Battelle's radiological control program.
3. The Contractor and all lower-tier Subcontractors shall follow the Radiological Control Requirements for work in posted radiological areas. Working through Battelle, the Contractor shall coordinate and involve Battelle in planning and execution of work activities in posted radiological areas. Specific requirements are included in the Job Planning Package (JPP), Workplace Exposure Assessment (WEA) and the Contractor's Job Safety Analysis (JSA) for the work.

C. RADIOLOGICAL OVERVIEW

1. The 331 Building has the following posted radiological areas with specific requirements for entry and work.

    a. Radiological Controlled Area (RCA)
    b. Radiological Buffer Area (RBA)
    c. Radioactive Material Area (RMA)
    d. Fixed Contamination Area (FCA)
    e. Radiation Area (RA), High Radiation Area (HRA), Very High Radiation Area
    f. Contamination Area (CA), High Contamination Area (HCA)
    g. Airborne Radioactivity Area (ARA)

2. Prior to performing any invasive work (demolition, equipment removal, remodeling, etc.) the area must be evaluated and surveyed or considered suspect for contamination. Notify the PNNL Construction Manager ten (10) working days prior to performing any invasive work in areas, which have not been evaluated and surveyed.

3. Certain facility systems, equipment and inaccessible areas within posted RBA's are not routinely surveyed and should be considered suspect for contamination. Notify the PNNL Construction Manager five (5) working days in advance to schedule an RPT.
4. Overheads and areas above six (6) feet within posted RBA's are not routinely surveyed and should be considered suspect for contamination. A radiological survey is required prior to accessing or working in these areas. Notify the PNNL Construction Manager five (5) working days in advance to schedule an RPT, perform surveys, and report results.
5. Disturbing surfaces (i.e., cutting, drilling, grinding, sanding, etc.) within posted RBA's should be considered suspect for contamination. Notify the PNNL Construction Manager five (5) working days in advance to schedule an RPT.

1.2 DEFINITIONS

A. The following definitions are in addition to those provided in 10 CFR 835.2

1. Administrative control level (ACL): A numerical dose constraint established at a level below the regulatory limits to administratively control and help reduce individual and collective dose in accordance with As-Low-As-Reasonably-Achievable (ALARA) concepts.
2. Continuous air monitor (CAM): Instrument that continuously samples and measures the levels of airborne radioactive materials on a 'real-time' basis and has alarm capabilities at preset levels.
3. Radiological area: A controlled area defined in this section as a 'radiation area (RA),' 'high radiation area (HRA),' 'very high radiation area (VHRA),' 'contamination area (CA),' 'high contamination area (HCA),' 'underground radioactive material area (URMA)' or 'airborne radioactivity area (ARA)', as posted in accordance with 10 CFR 835.603.
4. Radiological Control Technician (RPT): Battelle technician, who provides radiological surveys, supports work in radiological areas related to this project and responds to radiological emergencies (e.g., arms, cams, etc.).
5. Radiological buffer area (RBA): An intermediate area established to prevent the spread of radioactive contamination and to protect personnel from direct exposure to radioactive contamination or radiation exposure.
6. Radioactive material: Radioactive material includes any material, equipment or system component determined to be contaminated or suspected of being contaminated in excess of the Battelle's limits. Radioactive material also includes activated material, sealed and unsealed sources, and material that emits radiation.
7. Radioactive material area (RMA): Any area within a controlled area, accessible to individuals, in which items or containers of radioactive material exist and the total activity of radioactive material exceeds the applicable values provided in Appendix E of 10 CFR 835.
8. Radiological control hold point: A step in a Job Planning Package (JPP) that requires action by the radiological control organization to assess existing radiological conditions or prevent significant adverse radiological consequences during subsequent steps. The following activities and potential conditions require radiological control hold points:

    a. Potential for radiation doses in excess of the applicable Battelle administrative control level.
    b. Potential for elevated airborne radioactivity levels in excess of 10 DAC.

c. Potential for unplanned or uncontrolled release of radioactive material to the environment.

9. Radiological control survey point: A step in a Job Planning Package (JPP) that requires action by the radiological control organization to assess existing radiological conditions. Completion of a radiological control survey point requires formal documentation per RCP-3.1.01.
10. Radiological Work Permit (RWP): Permit that identifies radiological conditions, establishes worker protection and monitoring requirements, and contains specific requirements for radiological work activities. The Radiological Work Permit serves as an administrative process for planning and controlling radiological work and informing the worker of the radiological conditions. All access or work in radiological areas, as defined above, requires a RWP. The RWP is located within the Job Planning Package (JPP).

1.3 SOURCES

A. Refer to specification 017501 NUCLEAR DENSOMETRY AND RADIOGRAPHIC EQUIPMENT for on-site and off-site use of radioactive material or sealed sources.

B. Contractors who wish to utilize radioactive material or sealed sources under this subcontract away from the Site, at locations NOT covered by activities under another DOE-approved RPP, or by a license or permit granted by the U.S. Nuclear Regulatory Commission, agreement state, or state radiological health organization, as appropriate, shall NOT conduct any activities until first obtaining approval of Battelle. Based on the outcome of the review, may seek approval for the activities from DOE through a revision to the RPP.

1.4 REFERENCES

A. 10 CFR 835, Radiation Protection: Final Rule.

B. Radiological Protection Plan (RPP).

1.5 SUBMITTALS

A. Submit for information a list of personnel who have received radiological training. Provide employee's full name, job title, title of course(s), training date, and training organization. Include a copy of the training certification(s)

B. Submit a request to Battelle at least two week in advance to obtain DOS testing for all HEPA filtered equipment to be used in a Radiological Areas.

C. Submit a request to Battelle at least two week in advance to obtain radiological free release evaluations/surveys on equipment. See Section 3.1.C.

PART 2 - PRODUCTS

2.1 MATERIALS AND EQUIPMENT

A. Battelle-Furnished Equipment (Requests for the following equipment shall be made at least five (5) working days in advance.)

1. Optically Stimulated Luminescent Dosimeters (OSD)
2. Personnel Contamination Monitor Station and/or equipment necessary to perform required personnel monitoring.
3. Radiological Instrumentation for gross alpha/beta/gamma/neutron detection and counting equipment for alpha/beta and gamma analysis for samples collected by the Battelle's Radiological Control Organization.
4. Radiological air sampling and monitoring equipment in support of RPT activities. Includes portable air samplers and portable continuous air monitors.
5. Contamination survey and air sampling media (e.g. swipes and air sample filters).
6. Bioassay containers.
7. Personal Protective Equipment (PPE):

    a. Lab coats – cotton with Velcro or buttoned closures
    b. Shoe-covers - flat vinyl, yellow, 0.006 gauge top and 0.008 gauge embossed sole
    c. Coveralls - cotton with Velcro closure, no hood
    d. Hoods - cotton with Velcro closure, full head and shoulder coverage.
    e. Booties - cotton with Velcro closure
    f. Surgeons gloves – latex or nitrile
    g. Outer gloves - canvas

8. Respiratory protection equipment.
9. Yellow plastic bags of various sizes for potentially radiologically contaminated waste.

B. Battelle-Furnished Equipment (Requests for the following equipment shall be made at least twenty (30) working days in advance.)

1. Storage boxes for radiologically contaminated waste.
2. Vacuum cleaners equipped with DOS tested HEPA filters.
3. Welding fume extractors equipped with DOS tested HEPA filter.
4. As required, portable electric hand tools, equipped with DOS tested HEPA filters, or used in conjunction with separate HEPA exhausters.
5. Portable DOS tested HEPA exhausters, with sufficient CFM airflow.
6. HEPA filters for items 11, 12 and 13 above. HEPA filters shall provide an efficiency of not less than 99.97% when challenged with a 0.30-micrometer particle size aerosol.

C. Battelle Services

1. Battelle will provide the following services as appropriate:
    a. RPT to perform surveys required to release materials, equipment, waste and personnel monitoring
    b. Monitoring and surveys while work is being performed
    c. Radiological counting room
    d. Personnel exposure records
    e. Radiological engineering review for work packages
    f. Radiological Instrumentation Maintenance/Calibration
    g. Environmental Counting Laboratory

h. Change area and showers, as applicable

D. Contractor Furnished Equipment

1. Provide the Following Equipment:
   a. Workers who choose to wear personal clothing or jewelry in radiological areas do so at the workers' risk. Battelle will not reimburse workers for personal items worn inside radiological areas.
   b. Tyvek (or equal) disposable coverall with attached shoe-covers and hood for special circumstances where there is potential for radiological and other hazards (e.g., asbestos, beryllium, chemical, etc.). The Tyvek disposable coveralls shall be impermeable to airborne particulates.
   c. Decontamination supplies such as rags, mops, buckets, window cleaner (or other suitable decontamination agent) and other material needed for decontamination of equipment, personnel, and facilities.
   d. Equipment and supplies to construct temporary containment structures or devices such as glovebags and/or perma-con type structures. Temporary structures shall be fire retardant and meet the requirements in Section 015000 – Temporary Facilities and Controls.

PART 3 - EXECUTION

3.1 PREPARATION

A. Radiological Worker Training

1. Personnel shall complete DOE Radiological Worker I (RW1). The training, consisting of a core academic module and a site-specific practical factors module. Personnel shall pass examinations given after each module. Training is required every two years with a refresher on the off year.

B. Visitor Requirements

1. Personnel who enter areas posted to control exposure to radiation or radioactive contamination shall meet the following requirements:

   a. For visits expected to exceed 10 mrem during the visit is observing radiological work as part of a project, performing work (radiological or non-radiological), or spending in excess of 40 hours in duration in an RBA or Radiological Area annually. Personnel must attend General Employee Radiological Training (GERT). Completion of GERT training allows for unescorted access into both Radiologically Controlled Areas (RCA) and Radiological Buffer Areas (RBA).
   b. For visits expected to not exceed 10 mrem during the visit is observing radiological work as part of a project, performing work (radiological or non-radiological), or spending less than 40 hours in duration in an RBA or Radiological Area annually. Personnel may receive Battelle's visitor orientation. Orientation packages are available from Dosimetry Staff. Battelle will provide the orientation. Personnel who have this orientation may have escorted access to RCA's.

2. Visitors with a demonstrated need to enter the following areas may be allowed access if such access is controlled with area-specific training (i.e., GERT) and the use of qualified radiological worker escorts in lieu of Radiological Worker training:

    a. Radiological Buffer Areas
    b. Radiation Areas
    c. Contamination Areas
    d. Radioactive Material Areas

C. Equipment Surveys

1. Battelle will survey Contractor equipment at Battelle's expense, if it is considered potentially contaminated, upon arrival at the site to ensure the equipment meets the standards for radioactivity and radioactive contamination before it is brought into the work area. Items found to be contaminated shall be decontaminated by Battelle to site acceptable levels or removed from site at Battelle's discretion and at Contractor's expense.
2. Do not remove tools and equipment from an RBA without prior direction from radiological control personnel. Tools and equipment may require radiological survey.
3. In situations where tools/equipment cannot be released in accordance with Battelle procedures, tools/equipment shall be transferred to the Government for disposition.
4. Battelle will review and approve all survey results prior to authorizing free release of material.

D. Internal and External Dosimetry

1. Prior to any work in radiological areas, the Contractor shall complete a request for prior exposure information for Battelle.
2. Contractor employees who entering radiological areas will be issued Optically Stimulated Luminescent Dosimeters (OSD) to measure their radiation dose prior to starting work. The OSD must be worn on the front of the torso, between the neck and waist in such a way that the silver mylar beta window is facing away from the body and is not covered by any material or other badges.

E. Equipment Testing

1. Equipment having a HEPA filter shall be DOS tested by Battelle prior to use onsite. HEPA filter replacement or otherwise opening the equipment requires retesting of the equipment. All HEPA filtered equipment shall be tested annually. Re-testing is also required to be performed on equipment after construction/maintenance work has been completed or if the equipment has been subjected to any activity that may affect the filter efficiency and/or seals.

3.2 ENTRY AND EXIT REQUIREMENTS

Radiological workers must properly enter and exit radiological areas.

- Radiological Workers must be familiar with the radiological conditions of the work area. If not familiar with the radiological conditions of the work area, discuss them with the facility RPT.

A. Radiological Buffer Area

1. An RWP is typically not required but may be based on the work being performed.
2. No eating, drinking, use of tobacco or chewing gum is allowed.
3. No protective clothing is required for work in these areas, however RPT coverage may be required to verify that contamination is not present (such as in overhead areas).

B. Containment of Dust and Debris

1. Items labeled as internally contaminated or otherwise identified by Battelle as potentially containing internal contamination, may be encountered in the work area.

   a. Work controls identified in the Job Planning Package (JPP) and approved Contractor Job Safety Analysis (JSA) shall be used to prevent the spread of potential radiological contamination. Work controls include both work methods and engineering controls (e.g., containments, enclosures, fume extractors, HEPA vacuums or HEPA filter exhausters, etc.).

   b. Grinding, drilling, sanding and other similar dust creating operations, performed on systems containing potential internal contamination, which may disturb and spread potential radiological contamination are prohibited unless explicitly identified within the JPP and approved Contractor JSA.

   c. Breach potentially contaminated systems in strict accordance with approved work controls and in the presence of the Battelle RPT. The RPT will perform surveys to verify that no radiological materials are present. Do not proceed with the work until notification from the Battelle CM of satisfactory survey results.

   d. Contractor owned vacuums, HEPA vacuums and HEPA filtration systems used for convenience on potentially contaminated systems shall not be used prior to Battelle testing and authorization. Vacuums, HEPA vacuums and HEPA filtration systems shall not be removed from the RBA prior to RPT radiological survey and release.

C. Personnel Monitoring

1. Each worker exiting the radiological area established for contamination control into a less restrictive area shall be monitored. Each worker exiting the RBA (when established for contamination control) into a less restrictive area shall be self monitored. Monitoring requirements will be provided during the Radiation Worker Training program. Follow posted instructions and utilize the equipment provided.

   a. A whole body frisk is required (estimated time is 4 min).
   b. A hand and foot frisk is required (estimated time is 2 min).

2. Contamination is not expected to be found during monitoring. If contamination is found, remain at the monitoring station and notify the Radiological Control Technician. Decontamination will be performed by Battelle in a manner commensurate with the type and level of contamination, and must be completed before the worker leaves the facility.

D. Waste Management

1. Waste Disposal: Waste from items labeled as internally contaminated, or identified by Battelle as potentially containing internal contamination, may not be removed from the site. Potential radiologically contaminated waste shall be disposed of by Battelle.

    a. Boxes or containers used for disposal of potentially radiologically contaminated waste will be provided by Battelle.
    b. If waste boxes or containers cannot be located within the radiological area, wrap or bag waste before moving it from the radiological area to the boxes.
    c. Battelle shall authorize all movement of radiological waste prior to relocation outside a radiological area.
    d. In an effort to minimize waste, remove packaging to the maximum extent possible prior to transporting equipment and material into radiological buffer areas (RBA) and radiological areas.

3.3 FIELD QUALITY CONTROL

A. Personnel Exposure Records: Battelle will maintain personnel exposure records for all employees. Battelle will supply the personnel exposure records to the Contractor, and it is the responsibility of the Contractor to provide the information to employees.

END OF SECTION 017500

SECTION 017600

ENVIRONMENTAL PROTECTION AND WASTE MANAGEMENT

PART 1 - GENERAL

1.1 SUMMARY

A. This section provides requirements for environmental protection and waste management. It also highlights key applicable requirements and best-management practices described in the 40 CFR (Code of Federal Regulations), Washington Administrative Codes (WAC), Benton Clean Air Agency (BCAA) and Olympic Region Clean Air Agency (OCAA) air regulations, and Washington State Department of Ecology (Ecology) guidance regarding environmental and waste management compliance. Please note that this plan does not provide comprehensive environmental requirements. It is the contractor's responsibility to determine project-specific requirements on case-by-case basis.

1.2 DEFINITIONS

A. Construction Debris—solid waste, largely inert, resulting from the demolition or razing of buildings, roads, and other man-made structures. Demolition waste consists of, but is not limited to, concrete, brick, bituminous concrete, wood and masonry, roofing and roofing insulation, steel, and minor amounts of other metals like copper.

B. Battelle Representative—the primary Battelle representative at the construction or demolition site is the Construction Manager. Other Battelle representatives may include the Environmental Compliance Representative (ECR) or the waste management Field Service Representative (FSR).

C. Hazardous Material—a chemical or substance that is classified as a physical-hazard material or a health-hazard material.

1. A physical-hazard material is a chemical or substance classified as a combustible liquid, explosive, flammable cryogen, flammable gas, flammable liquid, flammable solid, organic peroxide, oxidizer, oxidizing cryogen, pyrophoric substance, or unstable (reactive) or water-reactive material.

2. A health-hazard material is a chemical or substance classified as a toxic, highly toxic, or corrosive material.

3. Examples of hazardous materials include, but are not limited to, paints, solvents, adhesives, lead solder, asbestos and cadmium brazing material.

D. Hazardous Waste or Dangerous Waste—Solid wastes designated by 40 CFR Part 261 or WAC 173-303 and regulated as hazardous and/or mixed waste by the U.S. Environmental Protection Agency (EPA) or the Washington State Department of Ecology).

E. Other Regulated Waste—Waste that is regulated and managed per applicable regulations and U.S. Department of Energy (DOE) Orders. This includes, but is not limited to, polychlorinated biphenyls (PCBs), asbestos, beryllium, radioactive wastes, and radioactive and hazardous (mixed) wastes.

F. Universal Waste – Dangerous wastes including batteries, thermostats, lamps and mercury containing equipment subject to the universal waste requirements of WAC 173-303-573

1.3 REFERENCES

A. Contemporary versions of the following as applicable:

B. 29 CFR 1926.59. 2006. "Hazard Communication." *Code of Federal Regulations*, U.S. Environmental Protection Agency.

C. 33 CFR 330. 2002. "Navigation and Navigable Waters: National Permit Program." *Code of Federal Regulations*, U.S. Environmental Protection Agency

D. 40 CFR 61. 2007. "National Emission Standards for Hazardous Air Pollutants." *Code of Federal Regulations*, U.S. Environmental Protection Agency.

E. 40 CFR 82. 2007. "Protection of Stratospheric Ozone." *Code of Federal Regulations*, U.S. Environmental Protection Agency.

F. 40 CFR 261. 2007. "Identification and Listing of Hazardous Waste." *Code of Federal Regulations*, U.S. Environmental Protection Agency.

G. 40 CFR 262. 2006. "Standards applicable to Generators of Hazardous Waste." *Code of Federal Regulations*, U.S. Environmental Protection Agency.

H. 40 CFR 279. 2006. "Standards for Management of Used Oils." *Code of Federal Regulations*, U.S. Environmental Protection Agency.

I. 40 CFR 761. 2006. "PCB Manufacturing, Processing, Distribution in Commerce, and Use Prohibition." *Code of Federal Regulations*, U.S. Environmental Protection Agency.

J. 49 CFR 172. 2010. "Hazardous Materials Table, Special Provisions, Hazardous Materials Communications, Emergency Response Information, Training Requirements, and Security Plans." *Code of Federal Regulations*, U.S. Department of Transportation.

K. 49 CFR 173. 2010. Shippers-General Requirements for Shipments and Packagings. *Code of Federal Regulations*, U.S. Department of Transportation.

L. 49 CFR Part 177 - Carriage by Public Highway. *Code of Federal Regulations*, U.S. Department of Transportation.

M. 49 CFR Federal Motor Carrier Safety Regulations, *Code of Federal Regulations*, U.S. Department of Transportation.

N. WAC 173-303. 2004. "Dangerous Waste Regulations." *Washington Administrative Code*, Olympia, Washington.

O. WAC 173-200. 1990. "Water Quality Standards for Ground Waters of the State of Washington". *Washington Administrative Code*, Olympia, Washington.

P. WAC 173-218. 2006. "Washington State Department of Ecology Underground Injection Control Program". *Washington Administrative Code*, Olympia, Washington.

Q. WAC 173-220. 2002. "National Pollutant Discharge Elimination System Permit Program". *Washington Administrative Code*, Olympia, Washington.

R. WAC 173-226. 2002. "Waste Discharge General Permit Program." *Washington Administrative Code*, Olympia, Washington.

S. WAC 173-350. 2005. "Minimum Functional Standards for Solid Waste Handling." *Washington Administrative Code*, Olympia, Washington.

T. WAC 173-400, 2009. "General Regulations for Air Pollution Sources." *Washington Administrative Code*, Olympia, Washington.

U. WAC 173-460. 2009. "Controls for New Sources of Toxic Air Pollutants." *Washington Administrative Code*, Olympia, Washington.

V. Benton County Clean Air Agency. 2008. *Regulation 1*, Richland, Washington.

W. Olympic Region Clean Air Agency. 2008. *Regulations 1through 8*, Olympia, Washington

X. National Fire Protection Association (NFPA) 5000. 2006. Quincy, Massachusetts.

Y. Washington Department of Ecology. 2004. *Stormwater Management Manual for Eastern Washington*, Chapter 7—"Construction Stormwater Pollution Prevention." Publication number 03-10-038C, Richland, Washington.

1.4 TRAINING

A. Refer to Division 1 "Summary of Work" for requirements.

1.5 PERMITS

A. Identify and obtain all required permits, and submit any required notices, for contractor activities in accordance with applicable federal, state, and local governing jurisdictions before any construction or demolition activities. Provide copies of permits and notices to the Battelle representative.

B. Conduct all work in accordance with requirements outlined in the issued permits and submitted notices.

C. Immediately report in writing to Battelle any non-compliances or potential non-compliances with the issued permits or notices.

D. Immediately report in writing any complaints by members of the public regarding air emissions to Battelle.

1.6 SUBMITTALS

A. For all work submit the following:
   1. Submit for information to Battelle, upon Substantial Completion, estimated or actual total weights of demolition waste and recycled/reused materials. Submit using Battelle Construction & Demolition Waste-Recycling form.

B. When performing work requiring Erosion and Sediment Control:
   1. Not used.

C. When performing work requiring Dust Control:
   1. Not used.

D. When performing Asbestos Abatement work submit the following:

   1. Not used.

E. When performing work generating Other Regulated Waste other than Asbestos:
   1. Submit for information to Battelle, upon Substantial Completion, one (1) copy of landfill waste disposal records for Other Regulated Waste.

F. When performing work generating Universal Waste: Submit for approval to Battelle, no less than five (5) working days after Award, the Contractor's proposed Universal Waste disposal site.

G. Submit for information to Battelle, upon Substantial Completion, one (1) copy of the landfill waste disposal records for Universal Waste.

PART 2 - PRODUCT AND MATERIALS

2.1 SPILL KIT

A. Provide a spill kit at the job site to absorb spilled materials and properly manage spill-cleanup residues. At a minimum, the spill kit will contain the following items: an appropriately sized container with lid, a spill kit identification sign on the container, absorbent pads, absorbent containment pigs, absorbents, shovel, rags, gloves, and safety glasses.

2.2 HAZARDOUS MATERIAL STORAGE

A. Manage hazardous materials and chemical products at the project site in accordance with applicable federal, state, and local laws, manufacturer instructions, fire codes, and general safe practices to prevent accidental discharges to the environment. Close the container when not in

use, use secondary containment when applicable, and store materials inside or under shelter. If material must be stored outside, then store in a manner to prevent releases and discharges to the environment.

PART 3 - EXECUTION

3.1 Excavation

A. Not used.

3.2 Cultural Resource Protection

A. In order to prevent disturbance of culturally significant resources comply with the following:
   1. Not used.

3.3 Biological Resource Protection

A. In order to prevent disturbance of animal habitats and protected plant and animal species comply with the following:
   1. If nesting birds (e.g., bank swallows), a pair of birds of the same species or a single bird that will not leave the area when disturbed, defensive behaviors (such as flying at workers or strident vocalizations), animal dens, or other wildlife are encountered in the work area (e.g., equipment, facilities, or soil with vertical banks) immediately stop work in the vicinity and notify the Battelle CM for biological assessment.
   2. Before disturbing native vegetation verify authorization to proceed with the Battelle CM.

3.4 Erosion and Sediment Control

A. Not used.

3.5 Dust Control

A. Not used.

3.6 Groundwater Containment

A. Not used.

3.7 Equipment Air Emissions

A. Not used.

3.8 Non-Hazardous Waste Accumulation

A. Accumulate non-hazardous waste in appropriate containers to prevent nuisance, contamination, dispersal by wind or precipitation, or visual blight.

B. Arrange for periodic collection of non-hazardous waste to prevent excessive accumulation of non-hazardous waste.

C. Refer to Section 3.11, "Waste Minimization and Pollution Prevention," of this provision for management of recyclable material.

3.9 Hazardous Waste Accumulation and Inspection

A. Contact Battelle representative and obtain written approval before establishing an accumulation area for hazardous waste.

3.10 Waste Disposal

A. All hazardous wastes generated by the Subcontractors will be turned over to Battelle for subsequent disposal at Contractor expense, unless other arrangements are authorized in writing by Battelle in advance.

B. Recycle non-hazardous or non-dangerous waste or dispose of it in one of the following Battelle-approved landfills: City of Richland landfill in Richland, Washington (if meeting City of Richland Landfill's waste acceptance criteria); the Finley Buttes Regional Landfill located in Boardman, Oregon; the Roosevelt Landfill located in Roosevelt, Washington; or the Waste Management landfill located in Arlington, Oregon.

C. Dispose of Other Regulated Wastes only at Battelle approved locations.

D. No waste is to be disposed of on Battelle-owned, managed, or leased property unless directed within the contract documents or authorized in writing by Battelle.

E. Comply with BCAA or OCAA regulations regarding prohibitions on open-air burning.

F. All Universal Waste shall be managed by the Contractor in accordance with the requirements of WAC 173-303-573. Dispose of at Battelle approved site and ensure segregation from the municipal waste stream.

3.11 Spill Control and Management

A. Report, immediately, any spill or leaks of materials such as oil, fuel, solvents, paints, coolants, acids, caustics, and equipment leaks to the Battelle Construction Manager. Call 375-2400 if the Battelle Construction Manager is not immediately available. Stop work and contain spills to the extent possible without compromising personnel safety. At the earliest possible time report to Battelle, in writing, the circumstances surrounding the spill event.

B. Prevent liquids such as gasoline, diesel fuel, lubricating oil, or antifreeze from entering the sanitary, process, or storm sewer systems, waterways, drainage ditches, or the ground. Where necessary, implement appropriate control measures, including, but not limited to, the use of physical barriers (plastic or tarps, berms, etc.), secondary containment, and/or absorbent materials to capture leaked or splattered contamination.

C. Waste from cleanup of spills may require being managed as a hazardous waste. The Battelle representative will make this determination.
   1. All containerized hazardous cleanup waste will be turned over to Battelle, within 12 hours after the spill cleanup, for subsequent disposal at the Contractor's expense. (Note: Cleanup waste from a gasoline spill is an example of hazardous waste.)
   2. The Contractor may dispose of non-hazardous or non-dangerous cleanup waste, as determined by Battelle, at one of the facilities listed in Section 3.8. (Note: Cleanup waste from a motor oil spill is an example of non-regulated waste.)

3.12 Liquid Effluent Management

A. Obtain prior written approval from Battelle for liquid effluent discharged to the ground, sanitary sewer, process sewer, storm sewer, or surface water.

B. Requirements for managing wastewater generated from concrete, asphalt, or saw-cutting and surfacing operations are provided below.
   1. Concrete or Asphalt Wastewater:
      a. Wash out concrete truck chutes, pumps, and internals only into formed areas awaiting installation of concrete or asphalt.
      b. Return unused concrete remaining in the truck or in the pump to the originating batch plant for recycling. For smaller projects, reuse, recycle, or dispose of concrete in a dumpster.
      c. Wash hand tools including, but not limited to, screeds, shovels, rakes, floats, trowels, and wheelbarrows only into formed areas awaiting installation of concrete or asphalt.
      d. Wash equipment that cannot be easily moved, such as concrete pavers, only in areas that do not directly drain to natural or constructed storm-water conveyances.
      e. When no formed areas are available, contain the washwater and leftover product in a lined container. Dispose of contained concrete in a manner that does not violate groundwater or surface-water quality standards.
      f. Do not discharge to a storm sewer, surface water, or sanitary sewer.

   2. Saw-cutting and Surfacing Operation:
      a. Collect material generated as part of a saw-cutting or surfacing operation and dispose of it in a Battelle-approved landfill (see Section 3.8). Saw-cutting and surfacing operations include, but are not limited to, sawing, coring, grinding, roughening, or hydro-demolition.
         1) Remove slurry and cuttings on the day they occur, as directed by the Battelle representative.
         2) Do not drain slurry, cuttings, or process water to any natural or constructed drainage conveyance including storm sewers, catch basins, or other underground injection control wells, trenches, or ditches.

3) Collected slurry, cutting, or process water can also be placed in a "lined holding pond" for evaporation. Dispose of the dried material as instructed by the Battelle representative.
4) Handle and dispose of cleaning waste material and demolition debris in a manner that does not cause contamination of water.

3.13 Waste Minimization and Pollution Prevention Program

A. Examples of waste minimization and pollution prevention practices are provided below:

1. Material Substitution: Minimize the number of chemicals used to perform the same or similar tasks. Where practical, replace hazardous materials with non-hazardous or less hazardous substitutes.

2. Inventory Reduction: Minimize product inventory to reduce accumulation of partially used and unused materials requiring disposal. Remove partially used lots and unused materials from the worksite at contract completion.

3. Packaging: Minimize packaging brought on worksite. Whenever feasible, return empty containers to vendor.

4. Waste Segregation: Separate wastes to avoid creating additional wastes and mixtures that cannot be recycled, or that would be more difficult to manage.

5. Process Modification: Streamline processes for more efficient operation and less waste generation.

B. Collect, package, and transport recyclable items. Typical recyclable items may include the following items:
1. Aluminum
2. Cardboard
3. Scrap metal
4. Aerosol cans
5. Batteries
6. Scrap wood
7. Used oil
8. Concrete
9. Asphalt
10. Shrubs and trees exceeding 2" caliper in size.

3.14 LEED Recycling and Construction Waste Management

A. Refer to Specification Section 013520 as applicable for project requirements related to LEED.

3.15 Other Regulated Waste

A. Asbestos
1. Comply with Benton Clean Air Agency or Olympic Clean Air Agency and 40 CFR 61 Subpart M requirements for demolition projects (whether containing asbestos or not) and demolition and renovation projects requiring the removal, handling, and disposal of asbestos waste, including the discovery of suspect asbestos materials during excavation.

a. Conduct asbestos projects in accordance with the emission control and waste disposal requirements of 40 CFR 61 Subpart M.
b. Dispose of asbestos waste in a Battelle provided onsite receptacle.

2. The Contractor shall comply with the following Code of Federal Regulations, Title 49, Parts 172.704 & 177.816 in addition to the Federal Motor Carrier Safety Regulations when required to handle, package, mark, and ship any asbestos material received from Battelle on this contract.

B. Beryllium

a. Place beryllium wastes in sealed impermeable bags or containers and label with the following warning: "DANGER—CONTAMINATED WITH BERYLLIUM, DO NOT REMOVE DUST BY BLOWING OR SHAKING." (Note: The Battelle representative will provide the label.)
b. Dispose of beryllium waste in a Battelle-approved landfill (see Section 3.8.B).

C. PCBs

1. Obtain written approval from Battelle before generating PCB wastes.

END OF SECTION 017600

SECTION 017800

COMPLETION AND TURNOVER

PART 1 - GENERAL

1.1 SUMMARY

A. This Section includes administrative and procedural requirements for contract closeout, including, but not limited to, the following:

1. Quality Records.
2. Inspection Documents
3. Contract Submittals
4. Project Record Documents
5. Warranties

1.2 SUBSTANTIAL COMPLETION

A. Preliminary Procedures: Before requesting inspection for determining date of Substantial Completion, complete the following. List items below that are incomplete in request.

1. Prepare a list of items to be completed and corrected (punch list), the value of items on the list, and reasons why the Work is not complete.
2. Submit specific warranties, workmanship bonds, maintenance service agreements, final certifications, and similar documents.
3. Obtain and submit releases permitting Battelle unrestricted use of the Work and access to services and utilities. Include occupancy permits, operating certificates, and similar releases.
4. Prepare and submit Project Record Documents, operation and maintenance manuals, Final Completion construction photographs, damage or settlement surveys, property surveys, and similar final record information.
5. Deliver tools, spare parts, extra materials, and similar items to location designated by Battelle. Label with manufacturer's name and model number where applicable.
6. Make final changeover of permanent locks and deliver keys to Battelle.
7. Complete startup testing of systems.
8. Demonstration and Training record.
9. Submit test/adjust/balance records.
10. Terminate and remove temporary facilities from Project site, along with mockups, construction tools, and similar elements.
11. Advise Battelle of changeover in heat and other utilities.
12. Complete final cleaning requirements, including touchup painting. Repair and restore marred exposed finishes to eliminate visual defects.

B. Inspection: Request the inspection for Substantial Completion in writing. On receipt of request, Battelle will either proceed with inspection or notify Contractor of unfulfilled requirements. Battelle will prepare the Certificate of Substantial Completion after inspection or

will notify Contractor of items, either on Contractor's list or additional items identified by Battelle that must be completed or corrected before certificate will be issued.

1. Re-inspection: Request re-inspection when the Work identified in previous inspections as incomplete is completed or corrected.

1.3 FINAL COMPLETION

A. Preliminary Procedures: Before requesting final inspection for determining date of Final Completion, complete the following:

1. Submit certified copy of Battelle's Substantial Completion inspection list of items to be completed or corrected (punch list), endorsed and dated by Battelle's. The certified copy of the list shall state that each item has been completed or otherwise resolved for acceptance.
2. Instruct Battelle's personnel in operation, adjustment, and maintenance of products, equipment, and systems.

B. Inspection: Request final inspection for acceptance I writing. On receipt of request, Battelle will either proceed with inspection or notify Contractor of unfulfilled requirements. Battelle will prepare a final Certificate for Payment after inspection or will notify Contractor of construction that must be completed or corrected before certificate will be issued.

1. Re-inspection: Request re-inspection when the Work identified in previous inspections as incomplete is completed or corrected.

1.4 LIST OF INCOMPLETE ITEMS (PUNCH LIST)

A. Preparation: Submit four copies of list. Include name and identification of each space and area affected by construction operations for incomplete items and items needing correction including, if necessary, areas disturbed by Contractor that are outside the limits of construction.

1. Organize list of spaces in sequential order, starting with exterior areas first and proceeding from lowest floor to highest floor.
2. Organize items applying to each space by major element, including categories for ceiling, individual walls, floors, equipment, and building systems.
3. Include the following information at the top of each page:

   a. Project name.
   b. Date.
   c. Name of Contractor.
   d. Page number.

1.5 PROJECT RECORD DOCUMENTS

A. General: Do not use Project Record Documents for construction purposes. Protect Project Record Documents from deterioration and loss. Provide access to Project Record Documents for Battelle's reference during normal working hours.

B. Submittals:

1. Record Drawings: Submit one (1) set of marked-up Record Prints.
2. Record Specifications: Submit one (1) copy of Project's Specifications, including addenda and Contract Modifications.
3. Warranties.

1.6 WARRANTIES

A. Submittal Time: Submit written warranties on request of Battelle for designated portions of the Work where commencement of warranties other than date of Substantial Completion is indicated.

B. Partial Occupancy: Submit properly executed warranties within 15 days of completion of designated portions of the Work that are completed and occupied or used by Battelle during construction period by separate agreement with Contractor.

C. Incorporate warranties into Vendor Information Manuals per specification 017900. Organize warranty documents into an orderly sequence with a table of contents.

PART 2 - PRODUCTS

2.1 RECORD DRAWINGS

A. Record Prints: Maintain one set of black-line white prints of the Contract Drawings and Shop Drawings.

1. Preparation: Mark Record Prints to show the actual installation where installation varies from that shown originally.

a. Give particular attention to information on concealed elements that would be difficult to identify or measure and record later.
b. Record data as soon as possible after obtaining it. Record and check the markup before enclosing concealed installations.

2. Content: Types of items requiring marking include, but are not limited to, the following:

a. Changes in dimensions or detail on Drawings.
b. Locations and depths of underground and/or concealed utilities.
c. Piping, duct and conduit routing.
d. Revisions to electrical circuitry.
e. Actual equipment locations.

3. Format:

a. Mark the Contract Drawings or Shop Drawings, whichever is most capable of showing actual physical conditions, completely and accurately. If Shop Drawings are marked, show cross-reference on the Contract Drawings.

b. Mark record sets with erasable, red-colored pencil. Use other colors to distinguish between changes for different categories of the Work at the same location.
c. Note Change Order numbers, and similar identification, where applicable.

B. Format: Identify and date each Record Drawing; include the designation "PROJECT RECORD DRAWING" in a prominent location.

1. Record Prints: Organize Record Prints into manageable sets. Bind each set with durable paper cover sheets. Include identification on cover sheets.
2. Identification: As follows:

a. Project name.
b. Date.
c. Designation "PROJECT RECORD DRAWINGS."
d. Name of Contractor.

2.2 MISCELLANEOUS RECORD SUBMITTALS

A. Assemble miscellaneous records required by other Specification Sections for miscellaneous record keeping and submittal in connection with actual performance of the Work. Bind or file miscellaneous records and identify each, ready for continued use and reference.

PART 3 - EXECUTION

3.1 DEMONSTRATION AND TRAINING

A. Instruction: Instruct Battelle's personnel to adjust, operate, and maintain systems, subsystems, and equipment not part of a system.

1. Provide instructors experienced in operation and maintenance procedures, and qualified and competent to instruct in the operation and maintenance of the intended equipment.
2. Provide information and instruction concerning preventative maintenance for equipment during construction, and for equipment that requires seasonal operation.
3. Schedule training with Battelle with at least seven days' advance notice.
4. Document training and attendees.

B. Program Structure: Develop an instruction program that includes individual training modules for each system and equipment not part of a system, as required by individual Specification Sections. Training shall include specific information and instruction concerning operation and preventative maintenance for equipment both during and after construction. For each training module, develop a learning objective and teaching outline. Include instruction for the following:

1. System design and operational philosophy.
2. Review of documentation.
3. Operations, Adjustments, Troubleshooting, Maintenance and Repair.

3.2 FINAL CLEANING

A. General: Provide final cleaning. Conduct cleaning and waste-removal operations to comply with local laws and ordinances and Federal and local environmental and antipollution regulations.

B. Cleaning: Employ experienced workers or professional cleaners for final cleaning. Clean each surface or unit to condition expected in an average commercial building cleaning and maintenance program. Comply with manufacturers written instructions.

1. Complete the following cleaning operations before requesting inspection for certification of Substantial Completion for entire Project or for a portion of Project:

a. Clean Project site, yard, and grounds, in areas disturbed by construction activities, including landscape development areas, of rubbish, waste material, litter, and other foreign substances.

1) Sweep paved areas broom clean. Remove petrochemical spills, stains, and other foreign deposits.
2) Rake grounds that are neither planted nor paved to a smooth, even-textured surface.
3) Remove tools, construction equipment, machinery, and surplus material from Project site.

b. Remove debris and surface dust from limited access spaces, including roofs, plenums, shafts, trenches, equipment vaults, manholes, attics, and similar spaces. Sweep concrete floors broom clean in unoccupied spaces.

c. Clean exposed surfaces and finishes (exterior and interior) to a dirt-free condition, free of stains, films, and similar foreign substances. Avoid disturbing natural weathering of exterior surfaces. Restore reflective surfaces to their original condition.

1) Vacuum carpet and similar soft surfaces, removing debris and excess nap; shampoo if visible soil or stains remain.
2) Clean transparent materials, including mirrors and glass in doors and windows. Remove glazing compounds and other noticeable, vision-obscuring materials. Replace chipped or broken glass and other damaged transparent materials. Polish mirrors and glass, taking care not to scratch surfaces.
3) Touch up and otherwise repair and restore marred, exposed finishes and surfaces. Replace finishes and surfaces that cannot be satisfactorily repaired or restored or that already show evidence of repair or restoration. Do not paint over "UL" and similar labels, including mechanical and electrical nameplates.
4) Wipe surfaces of mechanical and electrical equipment, and similar equipment. Remove excess lubrication, paint and mortar droppings, and other foreign substances.

d. Clean plumbing, filters, ducts and fixtures

1) Clean plumbing fixtures to a sanitary condition, free of stains, including stains resulting from water exposure.

2) Replace disposable air filters and clean permanent air filters. Clean exposed surfaces of diffusers, registers, and grills.
3) Clean ducts, blowers, and coils if units were operated without filters during construction.
4) Clean light fixtures, lamps, globes, and reflectors to function with full efficiency. Replace burned-out bulbs, and those noticeably dimmed by hours of use, and defective and noisy starters in fluorescent and mercury vapor fixtures to comply with requirements for new fixtures.

C. Comply with safety standards for cleaning. Do not burn waste materials. Do not bury debris or excess materials on Battelle's property. Do not discharge volatile, harmful, or dangerous materials into drainage systems. Remove waste materials from Project site and dispose of lawfully.

3.3 RECORDING AND MAINTENANCE

A. Recording: Maintain one copy of each submittal during the construction period for Project Record Document purposes. Post changes and modifications to Project Record Documents as they occur; do not wait until the end of Project.

B. Maintenance of Record Documents and Samples: Store Record Documents and Samples in the field office apart from the Contract Documents used for construction. Do not use Project Record Documents for construction purposes. Maintain Record Documents in good order and in a clean, dry, legible condition, protected from deterioration and loss. Provide access to Project Record Documents for Battelle reference during normal working hours.

END OF SECTION 017800

SECTION 017900

VENDOR INFORMATION

PART 1 - GENERAL

1.1 SUMMARY

A. This Section includes administrative and procedural requirements for preparing vendor information manuals, including the following:

1. Product data
2. Operation data
3. Maintenance data for the care and maintenance of equipment.

1.2 SUBMITTALS

A. Submittal: Submit One (1) Adobe PDF format copy of a preliminary Vendor Information, Operation and Maintenance Manual (VIO&M) in final form at least seven (7) calendar days before the date of Substantial Completion Inspection. Clearly note items that are not included (e.g. final test report documentation), that will be provided in the final submittal. Battelle will return the copy with comments within seven (7) calendar days.

B. Correct or modify each manual to comply with Battelle's comments. Submit one (1) Adobe PDF format copy of the corrected manual no later than the date of Substantial Completion Inspection.

PART 2 - PRODUCTS

2.1 MANUALS

A. Organization: Unless otherwise indicated, organize and copy to compact disk (CD) in PDF format a separate section for each piece of equipment. Each CD shall contain the following materials, in the order listed:

1. Title page
2. Table of contents
3. Manual contents

B. Title Page: Include the following information:

1. Subject matter included in manual
2. Name and address of Project
3. Date of submittal
4. Name, address, and telephone number of Contractor
5. Cross-reference to related systems in other operation and maintenance manuals

C. Table of Contents: List each product included in CD, identified by product name, indexed to the content of the volume, cross-referenced to Specification Section number in Project Manual and number of pages for each section.

D. CD Contents: Arrange contents alphabetically by system, subsystem, and equipment.

1. CD label: Label each CD with a printer generated self-adhesive label.

a. Identify each CD with a printed title " VENDOR INFORMATION – PRODUCT DATA, OPERATION AND MAINTENANCE MANUAL," Project title or name, and subject matter of contents. Indicate volume number for multiple-volume sets.

2.2 PRODUCT DATA

A. All previously reviewed and approved Product Data, test reports and other items identified explicitly identified for inclusion by specification shall be included in the Vendor Information Manuals.

2.3 OPERATION MANUALS

A. Content: In addition to requirements in this Section, include the following information:

1. Equipment descriptions
2. Operating standards
3. Operating procedures
4. Wiring diagrams
5. Control diagrams
6. Piped system diagrams
7. Precautions against improper use
8. License requirements including inspection and renewal dates

B. Descriptions: Include the following:

1. Product name and model number
2. Manufacturer's name
3. Equipment identification with serial number of each component
4. Equipment function
5. Operating characteristics
6. Limiting conditions
7. Performance curves
8. Engineering data and tests
9. Complete nomenclature and number of replacement parts

C. Operating Procedures: Include the following, as applicable:

1. Startup procedures
2. Equipment or system break-in procedures
3. Routine and normal operating instructions
4. Regulation and control procedures

5. Instructions on stopping
6. Normal shutdown instructions
7. Seasonal and weekend operating instructions
8. Required sequences for electric or electronic systems
9. Special operating instructions and procedures

D. Equipment Controls: Describe the sequence of operation, and diagram controls as installed.

2.4 EQUIPMENT MAINTENANCE MANUAL

A. Content: For each piece of equipment include source information, manufacturers' maintenance documentation, maintenance procedures, maintenance and service schedules, spare parts list and source information, maintenance service contracts, and warranty and bond information, as described below.

B. Manufacturers' Maintenance Documentation: Manufacturers' maintenance documentation including the following information for each component part or piece of equipment:

1. Standard maintenance instructions and bulletins.
2. Drawings, diagrams, and instructions required for maintenance, including disassembly and component removal, replacement, and assembly.
3. Identification and nomenclature of parts and components.
4. List of items recommended to be stocked as spare parts.

C. Maintenance Procedures: Include the following information and items that detail essential maintenance procedures:

1. Test and inspection instructions.
2. Troubleshooting guide.
3. Precautions against improper maintenance.
4. Disassembly; component removal, repair, and replacement; and reassembly instructions.
5. Aligning, adjusting, and checking instructions.

D. Maintenance and Service Schedules: Include service and lubrication requirements, list of required lubricants for equipment, and separate schedules for preventive and routine maintenance and service with standard time allotment.

1. Scheduled Maintenance and Service: Tabulate actions for daily, weekly, monthly, quarterly, semiannual, and annual frequencies.
2. Maintenance and Service Record: Include manufacturers' forms for recording maintenance.

E. Spare Parts List and Source Information: Include lists of replacement and repair parts, with parts identified and cross-referenced to manufacturers' maintenance documentation and local sources of maintenance materials and related services.

PART 3 - EXECUTION

3.1 MANUAL PREPARATION

A. Vendor Information Manuals: Assemble a complete set of final product data, operation and maintenance data for each piece of equipment.

END OF SECTION 017900

PSF 3410 LAB 1401
TEM MICROSCOPE INSTALLATION

PROJECT #S682648-EDP01

PROJECT WORKSHEET & DOCUMENT LIST

DRAWING/SHEET	TITLE
DEMOLITION	
WS10179/1	DEMOLITION LAB 1401 TEM FLOOR PLAN/RCP/DETAILS
WS10179/2	DEMOLITION LAB 1401 TEM 2ND FL MECH SUPPLY PLAN
WS10179/3	DEMOLITION LAB 1401 TEM 2ND FL MECH EXHAUST PLAN
WS10179/4	DEMOLITION LAB 1401 TEM POWER & LIGHTING PLANS
WS10179/5	DEMOLITION LAB 1401 TEM FIRE SPRINKLER & ALARM PLANS
CIVIL	
H-3-317134/1	CIVIL, LAB 1401 TEM DRAWING LIST, LEGEND & ABBREV
H-3-317134/2	CIVIL, LAB 1401 TEM ARCHITECTURAL SPECIFICATIONS
H-3-317134/3	CIVIL, LAB 1401 TEM MECHANICAL SPECIFICATIONS
H-3-317134/4	CIVIL, LAB 1401 TEM MECHANICAL SPECIFICATIONS
H-3-317134/5	CIVIL, LAB 1401 TEM ELECTRICAL SPECIFICATIONS
ARCHITECTURAL	
H-3-317135/1	ARCHITECTURAL, LAB 1401 TEM FLOOR PLAN & RCP
H-3-317135/2	ARCHITECTURAL, LAB 1401 TEM SECTIONS & ELEVATIONS
H-3-317135/3	ARCHITECTURAL, LAB 1401 TEM DETAILS
H-3-317136/1	ARCHITECTURAL, LAB 1401 TEM EQUIPMENT ARRANGEMENT
MECHANICAL	
H-3-317137/1	MECHANICAL, LAB 1401 TEM 1ST FLOOR PLAN
H-3-317137/2	MECHANICAL, LAB 1401 TEM 2ND FLOOR SUPPLY/EXHAUST PLANS
H-3-317137/3	MECHANICAL, LAB 1401 TEM SCHEDULES & DETAILS
H-3-317137/4	MECHANICAL, LAB 1401 TEM CONTROL WIRING DIAGRAM
H-3-317138/1	MECHANICAL, LAB 1401 TEM 1ST FLOOR PIPING PLAN
H-3-317138/2	MECHANICAL, LAB 1401 TEM 2ND FLOOR PIPING PLAN
H-3-317138/3	MECHANICAL, LAB 1401 TEM PLUMBING DETAILS
H-3-317138/4	MECHANICAL, LAB 1401 TEM 1ST/2ND FLOOR FIRE PROTECTION
ELECTRICAL	
H-3-317139/1	ELECTRICAL, LAB 1401 TEM POWER PLAN
H-3-317139/2	ELECTRICAL, LAB 1401 TEM 2ND FL POWER/FIRE ALARM PLANS
H-3-317139/3	ELECTRICAL, LAB 1401 TEM ONE-LINE DIAGRAMS
H-3-317140/1	ELECTRICAL, LAB 1401 TEM LIGHTING PLAN

LEGEND

- EXISTING
- HIDDEN
- TO BE RELOCATED
- TO BE REMOVED
- CEILING TO BE REMOVED AT NEW WALL LOCATIONS
- NEW
- X'-X" ELEVATION MARKER
- CEILING TILE TO BE REUSED/RELOCATED
- REUSED CEILING TILE
- REUSED CEILING TILE WITH CAN LIGHT
- 2X2 SUPPLY GRILLE
- 2X4 SUPPLY GRILLE
- EXHAUST GRILLE
- TRANSFER GRILLE
- F DISCONNECT
- J JUNCTION BOX
- $ SINGLE POLE LIGHT SWITCH
- $3 3 WAY LIGHT SWITCH
- $D DIMMER LIGHT SWITCH FOR 120V CAN LIGHT FIXTURE CONTROL
- CAN LIGHT FIXTURE
- FLUORESCENT LIGHT FIXTURE, 277 VAC
- E FLUORESCENT LIGHT FIXTURE WITH EMERGENCY BALLAST, 277 VAC
- P SMOKE DETECTOR

- CHWR — CHILLED WATER RETURN
- CHWS — CHILLED WATER SUPPLY
- CD — CONDENSATE DRAIN
- FP — FIRE PROTECTION WATER
- HHWR — HOT HEATING WATER RETURN
- HHWS — HOT HEATING WATER SUPPLY
- PCHWR — PROCESS CHILLED WATER RETURN
- PCHWS — PROCESS CHILLED WATER SUPPLY
- CONNECT TO EXISTING
- PIPE DROP
- PIPE CONNECTION BOTTOM
- PIPE CONNECTION TOP
- UNION
- REDUCER
- PIPING CAPPED FOR CONNECTION
- PIPE HANGER
- CHWS/CHWR HOSE
- DAMPER
- FIRE SPRINKLERS
- PIPE FLOW ARROW
- 3-WAY GATE VALVE
- BALL VALVE
- T TEMPERATURE SENSOR
- H HUMIDITY SENSOR
- NS NETWORK TEMPERATURE SENSOR
- CIRCULATOR PUMPS
- XXX # EQUIPMENT LABEL
- TRANSFER GRILLE AIR FLOW
- DUCT TURNING VANES
- FLEX DUCT

ABBREVIATIONS

AFF	ABOVE FINISHED FLOOR
AI	ANALOG INPUT
AO	ANALOG OUTPUT
CFM	CUBIC FEET PER MINUTE
CLG	CEILING
CLR	CLEAR
DI	DIGITAL INPUT
EL	ELEVATION
FMC	FLEXIBLE METAL CONDUIT
GYP BD	GYSUM BOARD
HVS	HEATING, VENTILATION & SUPPLY
HVEF	HEATING, VENTILATION EXHAUST FILTERED
JB	JUNCTION BOX
LOC	LOCATION
NIC	NOT IN CONTRACT
OC	ON CENTER
PMP	PUMP
RBA	RADIOLOGICAL BUFFER AREA
REQD	REQUIRED
RMC	RIGID METAL CONDUIT
SAD	SOUND ATTENUATOR DEVICE
SATC	SUSPENDED ACOUSTICAL TILE CEILING
SMR	SURFACE METAL RACEWAY
SRV	SAFETY RELIEF VALVE
STL	STEEL
VAV	VARIABLE AIR VOLUME
TEM	TUNNELING ELECTRON MICROSCOPE
TO	TOP OF
W/	WITH

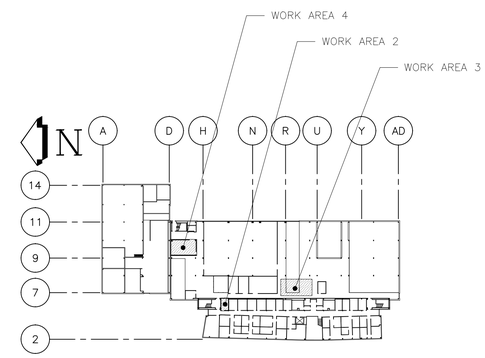

2ND FLOOR KEY PLAN

SCALE: NONE

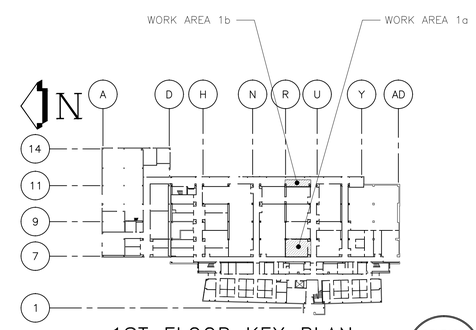

1ST FLOOR KEY PLAN

SCALE: NONE

RELEASE
05-13-13
DATE
JMK

EDP # S682648-EDP01

DRAWN	DATE
KS KOSCHIK/KJ COALY	3/14/13
CHECKED SD BURNETT	5/7/13
ENGR KENNETH D LARSON KD LARSON	5/7/13
APVD GREG TURPEN	8 MAY 13
OTHER	
OTHER	
APVD FOR IMPLEMENTATION BY BRIAN GREENAWAY	5/9/13

U. S. DEPARTMENT OF ENERGY
PACIFIC NORTHWEST SITE OFFICE

Pacific Northwest Division — Battelle — Richland, Washington 99352

SCALE: NONE

CIVIL
LAB 1401 TEM
DRAWING LIST, LEGEND & ABBREV

PROJ TITLE: TEM MICROSCOPE INSTALLATION

SIZE	INDEX NO	BLDG NO	DWG NO	REV NO
D	0000 0100	3410	H-3-317134	0

SCALE NONE — SHEET 1 OF 5

DRAWING NO	DRAWING TITLE
REFERENCE DRAWINGS	
NEXT USED ON	

RR	QA BY / DATE	ENGR BY / DATE	CHK BY / DATE	REV BY / DATE	DESCRIPTION	REV NO
REVISIONS						

PNNL-D_RD_10/11

SPECIFICATIONS
(UNLESS OTHERWISE STATED)

DIVISION 1 – GENERAL REQUIREMENTS

010000 GENERAL REQUIREMENTS

A. MATERIALS SHALL BE AS SPECIFIED OR BATTELLE ENGINEER APPROVED.

B. CONSTRUCTION CHANGES SHALL BE BY ENGINEERING CHANGE NOTICE (ECN) IF DIFFERENT THAN SHOWN.

014000 QUALITY REQUIREMENTS

A. WORK SHALL CONFORM TO THE NFPA 101, LIFE SAFETY CODE, 2009 EDITION. WORK NOT SPECIFICALLY ADDRESSED IN NFPA 101 SHALL MEET STANDARDS AS CALLED FOR IN THE (ICC) INTERNATIONAL BUILDING CODE, 2009 EDITION.

B. FIELD VERIFY DIMENSIONS PRIOR TO ORDERING MATERIALS OR BEGINNING OF WORK.

C. EXISTING SURFACES TO REMAIN, WHICH ARE DAMAGED DURING CONSTRUCTION, SHALL BE REPAIRED TO MATCH EXISTING AT CONTRACTOR'S EXPENSE.

D. DIMENSIONS ARE IN FEET AND INCHES UNLESS OTHERWISE SPECIFIED.

E. ABBREVIATIONS ARE IN ACCORDANCE WITH ASME Y14.38–1999.

F. ELECTRICAL – INSTALLATION SHALL BE IN ACCORDANCE WITH NATIONAL ELECTRICAL CODE (NEC) VERSION 2008. INSTALLATION WILL BE CHECKED FOR CODE COMPLIANCE BY BATTELLE ELECTRICAL INSPECTOR. REWORK AS REQUIRED TO MEET CODE AS NEEDED.

G. PLUMBING – SHALL BE INSTALLED PER INTERNATIONAL PLUMBING CODE LATEST EDITION.

H. FIRE SPRINKLER – INSTALLATION SHALL CONFORM TO NFPA 13, (LATEST EDITION), ORDINARY HAZARD.

DIVISION 2 – SITE WORK AND DEMOLITION

022000 DEMOLITION

A. REMOVE PORTION OF EXISTING STEEL JOIST CEILING SUPPORT STRUCTURE. EXTENT OF REMOVAL SHALL BE UP TO CONTRACTOR FOR CEILING CONFIGURATION SHOWN. GENERAL CONTRACTOR SHALL WORK CLOSELY WITH MAGNETIC SHIELDING SUBCONTRATOR TO DETERMINE EXTENT OF REMOVAL.

B. EXISTING SUSPENDED ACOUSTICAL TILE CEILING (SATC) AS REQUIRED FOR CONSTRUCTION OF NEW CEILING CONFIGURATION AS NOTED ON DRAWINGS. CEILING REMOVAL TO INCLUDE EXISTING CEILING TILE, METAL T–GRID SYSTEM, LIGHTING, AND DIFFUSERS AS NECESSARY.

C. REMOVE PORTION OF SPRINKLER PIPE AND RECONFIGURE AS SHOWN ON DRAWINGS.

D. REMOVE ALL LIGHTING CONDUITS AND WIRING TO NEAREST JUNCTION BOX.

E. ESTABLISH "SAFE TO WORK" STATUS OF ALL ELECTRICAL CIRCUITS BEFORE STARTING DEMOLITION ACTIVITIES. REMOVE CONDUIT AND WIRE BACK TO LAST JUNCTION BOX. LABEL WIRING THAT WILL BE REUSED.

F. REMOVE OR RELOCATE DUCTWORK AS SHOWN. COVER UNUSED OPENINGS IN REMAINING DUCT WITH SAME TYPE OF GALVANIZED SHEET METAL MATERIAL. ATTACH COVER WITH SHEET METAL SCREWS AND SEALANT.

G. DEMOLISHED MATERIALS SHALL BE DISPOSED OF IN A LICENSED LANDFILL FACILITY OR AS DIRECTED BY BATTELLE CONSTRUCTION MANAGER.

H. REMOVE PIPING TO NEAREST TEE OR ELBOW. INSTALL CAP, PLUG OR REROUTE AS NOTED ON DRAWINGS.

DIVISION 5 – METALS

051000 STRUCTURAL METAL FRAMING

A. STRUCTURAL STEEL ANGLES AS SHOWN ON THE DRAWINGS AS PART OF THE RAISED CEILING CONSTRUCTION.

B. ALL ROLLED STEEL SHAPES, BARS, ROD OR PLATE SHALL BE ASTM A36 MINIMUM.

C. STRUCTURAL METAL FRAMING: STEEL JOIST FRAMING MEMBERS AS CALLED FOR ON THE DRAWINGS. INSTALL PER INTERNATIONAL BUILDING CODE (IBC), BUILDING CODE COUNCIL (ICC) ER–4943P.

DIVISION 6 – WOOD, PLATICS AND COMPOSITES

061000 ROUGH CARPENTRY (060573 – WOOD TREATMENT)

A. PLYWOOD SHEATHING: APA 1/2–INCH AND 3/4–INCH, A–D EXPOSURE 1, INTERIOR.

B. PLYWOOD TO BE TREATED IN ACCORDANCE WITH THE AMERICAN WOOD PROTECTION ASSOCIATION'S U1–12 STANDARD. USE CATEGORY: UCFA (FIRE–RETARDANT, INTERIOR).

C. APPLIED TO COFFERED CEILING WALL STUDS AND UNDERSIDE OF EXISTING AND NEW STEEL JOISTS IN PREPARATION FOR MOUNTING EMF MAGNETIC FIELD SHIELDING SYSTEM.

DIVISION 8 – OPENINGS

081100 METAL DOORS AND FRAMES

A. DOOR FRAMES AND FRAMES AT WALL OPENINGS – MANUFACTURED IN ACCORDANCE WITH SDI 100, INTERIOR STANDARD DUTY 18 GAGE SHEET STEEL, MITERS FULLY WELDED AND GROUND SMOOTH, PREPARED FOR HARDWARE, AND FURNISHED WITH 3 WALL ANCHORS AND 1–BASE ANCHOR WELDED IN EACH JAMB, FACTORY PREPARED AND PRIMED. MANUFACTURERS: AMWELD, CURRIES, CECO.

081400 WOOD DOORS

A. WOOD DOOR – MANUFACTURED IN ACCORDANCE WITH AWI QUALITY STANDARD, 1300–G, PREMIUM GRADE, DOOR STYLE SLC–5 (5 PLY), 1 3/4" THICKNESS WITH SOLID LUMBER CORE, HAND SELECT WHITE MAPLE VENEER, PLAIN SLICED, VENEER EDGE BANDING, FSC CERTIFIED. DOOR PAIR SHALL HAVE "PAIR MATCHED" FACE VENEER. DOOR FINISH: PREMIUM GRADE FACTORY FINISH WITH PERFORMANCE COMPARABLE TO AWI SYSTEM TR–4 CONVERSION VARNISH OR AWI SYSTEM TR–6 CATALYZED POLYURETHANE (SHEEN: SATIN). MANUFACTURERS: ALGOMA HARDWOODS INC., EGGERS INDUSTRIES, MARSHFIELD DOOR SYSTEMS. CONTRACTOR TO VERIFY DOORS WILL MATCH TO EXISTING PRIOR TO ORDER. SEE DRAWINGS FOR GLASS.

87100 DOOR HARDWARE

A. HARDWARE GROUP 1 (EXISTING DOOR 1403)

NO.	HARDWARE ITEM	HDWR # AND FINISH	MANUFACTURER
1 EA	LOCKSET	ML2030 LWA 630 LESS O/S EMERGENCY RELEASE X HANDING	CORBIN/RUSSWIN
2 SETS	GASKETING (DOUBLE ROW)	S88 W	PEMKO

NOTE: REMOVE EXISTING LOCKSET, PREP EXISTING WOOD DOOR, SUBSTITUTE LOCKSET SPECIFIED. THUMBTURN TO BE ON 1401 SIDE. LEAVE EXISTING APPLIED GASKETING IN PLACE ON HM FRAME. MODIFY OR REPLACE SILENCERS AS REQUIRED FOR PLACEMENT OF GASKETING. SALVAGE EXISTING LOCKSET TO BATTELLE CONSTRUCTION MANAGER FOR REUSE.

B. HARDWARE GROUP 2 (DOOR 1401A)

NO.	HARDWARE ITEM	HDWR # AND FINISH	MANUFACTURER
6 EA	HINGES	TA2314 26D 4 ½ X 4 ½	MC KINNEY
2 EA	FLUSHBOLT	FB458 626	IVES
1 EA	DUSTPROOF STRIKE	DP2 626	IVES
1 EA	LATCHSET	ML2010 LWA 630 X SS078	CORBIN/RUSSWIN
1 EA	CLOSER/STOP (ACTIVE LEAF)	DC6210 A4 689 M54	CORBIN/RUSSWIN
1 EA	WALL STOP	1270WV 626	TRIMCO
2 EA	AUTOMATIC DOOR BOTTOM	4301CRL 36	PEMKO
1 SET	GASKETING	332CR 7284	PEMKO
1 EA	ASTRAGAL	352CR 84	PEMKO

C. HARDWARE GROUP 3 (DOOR 1401B)

NO.	HARDWARE ITEM	HDWR # AND FINISH	MANUFACTURER
3 EA	HINGES	TA2314 26D 4 ½ X 4 ½	MC KINNEY
1 EA	LOCKSET	ML2057 LWA 630 LC	CORBIN/RUSSWIN
1 EA	CYLINDER	10T–0200 X CP–180021 26DE	MEDECO
1 EA	WALL STOP	1270WV 626	TRIMCO
3 EA	SILENCERS	4279	NETHERLAND

088700 GLAZING SURFACE FILMS

A. WINDOW SURFACE BLACKOUT FILM: CONTRACTOR TO REMOVE EXISTING TAPED FOIL FROM WINDOWS IN EXISTING DOOR 1403 AND DOOR PAIR 1401A. CONTRACTOR TO INSTALL SOLYX BACKOUT FILM, SXWF–BO (DESIGN BASIS, AS MANUFACTURED BY DECORATIVE FILMS, LLC.), TO LAB 1401 SIDE. OTHER APPROVED MANUFACTURERS: 3M, SNAP TINT, GILA, SOLAR GARD.

DIVISION 9 – FINISHES

092116 GYPSUM BOARD ASSEMBLIES

A. ALL GYPSUM WALLBOARD SHALL BE 5/8" THICK, FIRE CODE TYPE "X".

B. TAPE AND FINISH ALL JOINTS WITH JOINT CEMENT. PREPARE FOR "LEVEL 4" BOARD FACE FINISH, SMOOTH PAINTED SURFACE WHERE GYPSUM BOARD IS VISIBLE PER GYPSUM ASSOCIATION GA–219–96 (FINISH LEVEL NOT REQUIRED ABOVE SATC, ONLY TAPED JOINTS).

C. LIGHT–GAUGE STEEL STUDS SHALL BE AS SPECIFIED HEREIN OR AS CALLED FOR ON THE DRAWINGS.

D. SOUND ATTENUATION: BATTS SHALL BE OWENS CORNING UNFACED "ECO TOUCH" SOUND ATTENUATION BATTS (3 1/2–INCH) OR APPROVED EQUAL. ALL VOIDS BETWEEN STUDS, EVEN MULTIPLE STUD APPLICATIONS NOTED ON DRAWINGS, SHALL BE FILLED. CONTRACTOR SHALL TAKE CARE NOT TO CRUSH THE BATT, SUCH THAT IT FILLS EVERY STUD CAVITY COMPLETELY.

E. ACOUSTICAL SEALANT: GYPSUM BOARD APPLICATION SHALL LEAVE 1/2–INCH LEVEL JOINT (GAP) BETWEEN THE FLOOR AND THE BOTTOM WALL PANEL. ACOUSTICAL SEALANT SHALL BE APPLED, SUCH THAT IT FILLS THIS GAP (BOTH SIDES OF ALL WALLS). SEALANT APPLICATION SHALL NOT IMPEED THE APPLICATION OF THE RESILIENT WALL BASE ON EITHER SIDE OF WALL.

F. ASSEMBLY AND WORKMANSHIP SHALL CONFORM TO STANDARDS PRESCRIBED IN THE MANUFACTURER'S CONSTRUCTION HANDBOOK, AND/OR STEEL FRAMING MANUAL, FOR THE RESPECTIVE GYPSUM BOARD AND STEEL FRAMING MATERIALS CHOSEN FOR THE JOB. APPROVED MANUFACTURERS: UNITED STATES GYPSUM, CERTAINTEED GYPSUM CO., NATIONAL GYPSUM CO., GEORGIA PACIFIC GYPSUM.

095100 ACOUSTICAL CEILINGS

A. EXISTING LAY–IN CEILING TILE – (MINERAL FIBER PANELS) 3/4" THICK WET–FORMED MINERAL FIBER PANEL WITH ACOUSTICALLY TRANSPARENT WASHABLE COATING THAT IS BOTH SOIL AND SCRATCH–RESISTANT. CLASS A FIRE/FLAME RATING (25 OR LESS) AND NOISE REDUCTION COEFFICIENT (NRC) OF 0.70, CUT TO FIT SNUGGLY IN 24 X 24 SUSPENDED GRID SPACING. ARMSTRONG CEILING (DESIGN BASIS) – "ULTIMA, MODEL: 1911, BEVELED TEGULAR EDGE OR APPROVED. BATTELLE TO SUPPLY EXTRA TILE AS NEEDED FOR CONTRACTOR INSTALLATION. CONTRACTOR TO COORDINATE WITH BATTELLE CONSTRUCTION MANAGER.

B. SUSPENDED CEILING GRID – 15/16" EXPOSED TEE SYSTEM, DOUBLE WEB CONSTRUCTION, GALVANIZED STEEL WITH EXPOSED SURFACE PAINTED, WITH CLASS "A" FIRE/FLAME RATING. SYSTEM CLASSIFICATION SHALL BE ASTM C635 HEAVY DUTY AND INSTALLED IN ACCORDANCE WITH UBC STANDARD 25–2. ARMSTRONG CEILING (DESIGN BASIS) – PRELUDE ML OR APPROVED. CONTRACTOR RESPONSIBLE FOR SUPPLYING AND INSTALLING ALL SUSPENDED CEILING GRID MATERIALS REQUIRED FOR THE JOB.

096500 RESILIENT WALL BASE AND FLOORING

A. ALL NEW INTERIOR WALLS TO RECEIVE 4–INCH HIGH RUBBER BASE FROM ROLL STOCK.

B. STYLE: TOP SET COVE STYLE TO MATCH EXISTING WHERE IT OCCURS. CEMENT RUBBER BASE IN PLACE WITH WATER RESISTANT ADHESIVE. ROPPE (DESIGN BASIS) OR APPROVED. COLOR: P129 DOLPHIN TO MATCH EXISTING WHERE IT OCCURS.

C. EXISTING RUBBER BASE IN LABORATORY 1401 TO REMAIN, EXCEPT AS DEMOLISHED FOR FOR NEW WALL LOCATIONS OR PLACEMENT OF CABINETS.

D. 1/8–INCH SQUARE CAP MOLDING, 3/4–INCH LENGTH, BURKE/MERCER PART 390 OR APPROVED. TO BE USED AROUND NOTCHED HOLE IN EXISTING SHEETGOODS FLOORING FOR TEM "DAMPER FEET" SUPPORTS.

E. VINYL SHEET GOODS FLOORING: KEEP EXISTING IN PLACE, EVEN AT NEW WALL LOCATIONS EXCEPT FOR INTEGRAL COVED BASE PORTION WHERE NEW WALL CONNECTS TO EXISTING. NOTCH FLOORING INTEGRAL COVED BASE AT NEW WALL LOCATIONS AND ABUTT WITH NEW RUBBER BASE AS CALLED FOR IN "B" ABOVE.

099000 PAINTS AND COATINGS

A. ALL SURFACES TO BE CLEANED, PATCHED, AND PREPARED IN STRICT ACCORDANCE WITH THE PAINTING AND DECORATING CONTRACTORS OF AMERICA (PDCA) ARCHITECTURAL PAINTING AND WALL COVERING MANUAL.

B. PAINTS AND COATINGS SHALL MEET THE VOLITAL ORGANIC COMPOUNDS (VOC) AND CHEMICAL COMPONENT LIMITS OF GREEN SEAL REQUIREMENTS.

C. INTERIOR GYPSUM WALLBOARD AND HOLLOW METAL DOOR FRAMES:

1. PRIME COAT: AS RECOMMENDED BY FINISH COAT MANUFACTURER.

2. FINISH:

EXISTING LABORATORY WALLS: 1 COAT "ECO SPEC" INTERIOR LATEX EGGSHELL ENAMEL 223, AS MANUFACTURED BY BENJAMIN MOORE. COLOR: SAIL CLOTH.

NEW WALLS: 2 COATS "ECO SPEC INTERIOR LATEX EGGSHELL ENAMEL 223, AS MANUFACTURED BY BENJAMIN MOORE. COLOR: SAIL CLOTH.

RETURN AIR DUCT ACCENT (SOUTHWEST CORNER OF LAB 1401: 2 COATS "ECO SPEC" INTERIOR LATEX EGGSHELL ENAMEL 223 AS MANUFACTURED BY BENJAMIN MOORE. COLOR: BREWSTER GRAY (BLUE–GRAY).

COFFERED CEILING GYPSUM BOARD SOFFIT/WALL ACCENT: SAME AS FOR RETURN AIR DUCT ABOVE.

D. INTERIOR WOOD DOORS: SEE SPECIFICATION SECTION 081400 FOR DOOR FINISH.

DIVISION 10 – SPECIALTIES

102600 WALL AND DOOR PROTECTION

A. CORNER GUARDS: CONSTRUCTION SPECIALTIES VINYL 4000 MODEL SSM–20N SERIES WITH PEBBLETTE TEXTURE (DESIGN BASIS) OR APPROVED (2 REQUIRED). LINEAL SIZE: 6'–0" ABOVE RUBBER BASE. COLOR: ONE GRAY AND ONE OFF–WHITE TO BE CHOSEN FROM MANUFACTURER'S STANDARD COLORS.

DIVISION 13 – SPECIAL CONSTRUCTION

134900 STEEL EMF MAGNETIC FIELD SHIELDING SYTEM

A. LABORATORY 1401 IS CURRENTLY CONSTRUCTED WITH AN EXISTING SIX–SIDED (FLOOR, CEILING, 4–WALLS) DC MAGNETIC FIELD SHIELDING SYSTEM CURRENTLY INSTALLED. THE EXISTING SHIELDING SYSTEM IS COMPOSED OF FIVE LAYERS OF 0.024–INCH SILICON IRON STEEL SHEETS (M19 GRADE), WITH OVERLAPPED EDGES AND SECURED TO A 3/4–INCH PLYWOOD SHEATHING APPLIED TO THE UNDERSIDE OF 10–INCH STEEL "C" JOISTS. A LAYER OF 5/8–INCH GYPSUM BOARD IS CURRENTLY APPLIED OVER THE FACE OF THE SHIELDING SYSTEM ON BOTH THE CEILING AND WALLS WITHIN LAB 1401.

B. WORK SHALL BE PERFORMED UNDER A DESIGN–BUILD CONTRACT WITH "FIELD MANAGEMENT SERVICES CORPORATION" (FMS), CONTACT INFORMATION: 123 N. LAUREL, LOS ANGELES, CA 90048, PHONE:(323) 937–1562 (EMAIL: SALES @ FMS–CORP.COM). WORK TO BE DONE UNDER THIS CONTRACT SHALL INCLUDE THE FOLLOWING:

1. SHOP DRAWING SUBMITTAL: SHOP DRAWINGS INDICATING HOW PORTIONS OF THE EXISTING SHIELDING WILL BE DEMOLISHED SUCH THAT NEW SHIELDING LAYERS CAN THEN BE INSTALLED WITHIN THE COFFERED CEILING RESULTING IN A COMPLETE SHIELDING ENCLOSURE AROUND LAB 1401, WHICH MEETS OR EXCEEDS THE SHIELDING PERFORMANCE OF THE EXISTING SYSTEM. SHOP DRAWINGS SHALL INDICATE OVERLAP DISTANCES AND METHOD FOR FASTENING SHEETS IN PLACE. SHOP DRAWINGS SHALL BE SUBMITTED TO BATTELLE FOR APPROVAL PRIOR TO BEGINNING WORK. SHIELDING CONTRACTOR SHALL ALSO PROVIDE AS–BUILTS INDICATING ANY WORK THAT DEVIATES FROM THE ORIGINAL APPROVED SHOP DRAWINGS DURING THE COURSE OF CONSTRUCTION.

2. FIELD MEASUREMENT: THE EXISTING SHIELDING SYSTEM WAS DESIGNED TO REDUCE THE DC MAGNETIC FIELD PERTURBATIONS OF THE EARTH'S MAGNETIC FIELD (DUE TO THE LOCALIZED USE OF THE BUILDING ELEVATOR IN CLOSE PROXIMITY TO LAB 1401) TO NO MORE THAN 0.1 mG WITHIN THE LAB. THE SHIELDING CONTRACTOR SHALL SUBMIT TESTING, UPON COMPLETION OF THE REVISED SHIELDING, THAT SHOWS THE MODIFIED SHIELDING MEETS OR EXCEEDS THIS MEASUREMENT. RESULTS SHALL BE CERTIFIED IN A LETTER TO BE ISSUED BY FMS TO BATTELLE THAT ALSO INCLUDES THE "FREE OF DEFECTS GUARANTEE" MENTIONED BELOW.

3. ALL WORK SHALL BE GUARANTEED FREE FROM DEFECTS. ANY DEFECTIVE MATERIALS OR WORKMANSHIP, AS WELL AS ANY DAMAGE TO WORK OF ANY TRADES RESULTING FROM SAME, SHALL BE REPAIRED OR REPLACED AS DIRECTED DURING CONSTRUCTION AND WITHIN THE CONSTRUCTION GUARANTEE PERIOD AT NO EXPENSE TO THE OWNER.

C. PRODUCT
SHIELDING PRODUCT, TO BE PURCHASED AND INSTALLED BY THE SHIELDING CONTRACTOR, SHALL BE AS FOLLOWS (REFER TO EXISTING SYSTEM AS DESCRIBED IN PARAGRAPH "A" ABOVE):

1. TYPE: SILICON IRON STEEL SHEETS, OF SAME TYPE USED FOR EXISTING SHIELDING SYSTEM COMPLYING WITH ASTM 876 AND/OR ASTM A677 SPECIFICATIONS. MILL CERTIFICATION SHALL BE PROVIDED INDICATING THAT THE MATERIAL CONFORMS TO THESE SPECIFICATIONS.

2. GRADE: M19

3. GAUGE: 0.024–INCH (5 LAYERS = APPROXIMATELY 1/8–INCH THICKNESS OVERALL).

4. SHEET SIZE: MATCH TO EXISTING, OR AS DETERMINED BY SHIELDING CONTRACTOR AND APPROVED BY BATTELLE PRIOR TO ORDER OF SAME.

5. FINISH: GRADE "C" (MATERIAL MUST BE FREE OF EXCESSIVE WEATHERING, CORROSION, SURFACE DEFECTS AND IRREGULARITIES OF PLATE EDGES).

6. APPROVED MANUFACTURERS: ALLEGHENY–LUDLUM OR APPROVED.

D. IT SHALL BE THE COMBINED RESPONSIBILITY OF BOTH THE GENERAL CONTRACTOR AND THE SHIEILDING CONTRACTOR TO SCHEDULE WORK SUCH THAT THE SHIELDING SYSTEM CAN BE BOTH DEMOLISHED AND REINSTALLED AT THE PROPER TIME WITHOUT DELAYING THE COMPLETION OF THE OVERALL LAB REMODEL PROJECT. BOTH SHALL WORK CLOSELY TOGETHER THROUGH FACILITATION AND COOPERATION IN ORDER TO PERMIT THE WORK OF ALL TRADES TO BE COMPLETED IN A TIMELY MANNER..

RELEASE
05–13–13
DATE
JMK

EDP # S682648–EDP01

DRAWING NO	DRAWING TITLE
REFERENCE DRAWINGS	
NEXT USED ON	

RR	QA BY / DATE	ENGR BY / DATE	CHK BY / DATE	REV BY / DATE	DESCRIPTION	REV NO
REVISIONS						

DRAWN	KJ COALY	DATE 3/14/13
CHECKED	SD BURNETT	5/7/13
ENGR	KENNETH D LARSON / KD LARSON	5/7/13
APVD	GREG TURPEN	8 MAY 13
OTHER		
OTHER		
APVD FOR IMPLEMENTATION BY	BRIAN GREENAWAY	5/9/13

U. S. DEPARTMENT OF ENERGY
PACIFIC NORTHWEST SITE OFFICE
Pacific Northwest Division — Battelle — Richland, Washington 99352

CIVIL
LAB 1401 TEM
ARCHITECTURAL SPECIFICATIONS

PROJ TITLE: TEM MICROSCOPE INSTALLATION

SIZE	INDEX NO	BLDG NO	DWG NO	REV NO
D	0800 1000	3410	H–3–317134	0

SCALE NONE — SHEET 2 OF 5

PNNL–D_R0_10/11

SPECIFICATIONS
(UNLESS OTHERWISE NOTED)

DIVISION 20 – GENERAL MECHANICAL

200500 COMMON MECHANICAL WORK REQUIREMENTS

A. GENERAL

1. SCOPE OF WORK: PROVIDE MECHANICAL SYSTEMS SHOWN AND SPECIFIED COMPLETE IN EVERY RESPECT AND FULLY FUNCTIONAL.

2. CODES AND STANDARDS: MECHANICAL WORK SHALL BE IN STRICT ACCORDANCE WITH THE MOST CURRENT EDITION OF THE BUILDING CODE, MECHANICAL CODE, PLUMBING CODE, FIRE CODE, AND NATIONAL ELECTRICAL CODE. IN CASE OF CONFLICT WITH DRAWINGS OR SPECIFICATIONS, THE CODES AND ORDINANCES GOVERN.

3. MANUFACTURER'S DATA AND INSTRUCTIONS: MECHANICAL WORK SHALL BE INSTALLED IN STRICT COMPLIANCE WITH THE MANUFACTURER'S WRITTEN INSTRUCTIONS INCLUDING PRESSURE AND TEMPERATURE LIMITATIONS, ACCESS AND SERVICE CLEARANCES, AND START–UP INSTRUCTIONS.

4. MECHANICAL DRAWINGS SHALL SERVE AS WORKING DRAWINGS FOR DIVISION 22 AND 23 WORK, BUT THE CONTRACTOR SHALL REFER TO ARCHITECTURAL, STRUCTURAL AND ELECTRICAL DRAWINGS FOR ADDITIONAL DETAIL EFFECTING THE INSTALLATION OF WORK. ARCHITECTURAL AND STRUCTURAL DRAWINGS SHALL TAKE PRECEDENCE OVER THE MECHANICAL DRAWINGS IF ANY DIMENSIONAL DISCREPANCIES EXIST.

B. INTENT AND INTERPRETATION:

1. THE DRAWINGS AND SPECIFICATIONS SUPPLEMENT EACH OTHER AND DETAILS CONTAINED IN ONE SHALL BE INCLUDED AS IF CONTAINED IN BOTH. ITEMS OR COMPONENTS NOT SPECIFICALLY DESCRIBED IN THE SPECIFICATIONS OR NOTED ON THE DRAWINGS, BUT WHICH ARE NECESSARY TO MAKE A COMPLETE WORKING INSTALLATION SHALL BE INCLUDED AT NO ADDITIONAL COST. IN CASE OF CONFLICT BETWEEN DRAWINGS AND/OR SPECIFICATIONS, THE MOST STRINGENT REQUIREMENT SHALL BE BID.

2. THE DRAWINGS ARE PARTLY DIAGRAMMATIC AND DO NOT SHOW THE EXACT LOCATION OF ALL NEW MECHANICAL WORK. MAKE OFFSETS IN PIPING AND DUCTWORK WITH FITTINGS AND AS REQUIRED. SEE INDIVIDUAL PIPING SECTIONS FOR PIPE/FITTING MATERIALS AND TESTING REQUIREMENTS.

3. THE LOCATION OF MECHANICAL WORK, SUCH AS DUCT WORK OR PIPING, SHALL BE FIELD VERIFIED TO ENSURE THAT IT CLEARS ALL OPENINGS AND STRUCTURAL MEMBERS; THAT IT MAY BE PROPERLY CONCEALED; AND THAT IT CLEARS CABINETS, LIGHTS AND EQUIPMENT HAVING FIXED LOCATIONS. PROVIDE OFFSETS, TRANSITIONS, AND FITTINGS AS REQUIRED TO REROUTE MECHANICAL WORK AROUND OBSTRUCTIONS AT NO ADDITIONAL COST TO BATTELLE.

C. START–UP & DEMONSTRATION:

1. PREPARE, START, AND DEMONSTRATE THAT ALL MECHANICAL SYSTEMS OPERATE AND FUNCTION AS DESIGNED AND IN ACCORDANCE WITH THE MANUFACTURER'S RECOMMENDATIONS. PERFORM DEMONSTRATIONS AS REQUESTED AND IN THE PRESENCE OF THE BATTELLE CONSTRUCTION MANAGER, GIVEN ONE WEEKS PRIOR NOTICE. PROVIDE ALL INSTRUMENTS AND PERSONNEL AS REQUIRED TO CONDUCT DEMONSTRATION AND START–UP TO BATTELLE'S SATISFACTION. SUBMIT STARTUP REPORTS FOR MECHANICAL EQUIPMENT AND SYSTEMS CERTIFYING PROPER OPERATION AT TIME OF STARTUP AND INCLUDE IN O&M MANUAL.

F. PRODUCT AND MATERIAL SUBMITTALS:

1. SUBMIT COMPLETE MECHANICAL PRODUCT SUBMITTALS FOR APPROVAL FOR ALL MECHANICAL SPECIFICATIONS DIVISIONS INCLUDING ALL MATERIALS AND EQUIPMENT. SUBMIT DIVISION 21 WITH SHOP DRAWINGS, CATALOG CUTS, AND CALCULATIONS. SUBMIT DIVISION 22 AND 23 WITH SHOP DRAWINGS. SUBMIT DUCTWORK LAYOUT DRAWINGS, TAB AND COMMISSIONING PROCEDURES, AND FORMS. LAYOUT DRAWINGS SHALL DETAIL SYSTEM LAYOUT WITHIN THE AREA ALLOCATED ON THE DRAWINGS.

2. INCLUDE DESCRIPTIVE BULLETINS DATA SHEETS, CATALOG CUTS, DIAGRAMS, COMPLETE DIMENSIONAL DRAWINGS, INSTALLATION INSTRUCTIONS, WARRANTY DATA, AND OTHER INFORMATION AS REQUESTED BY THE ENGINEER.

G. PRODUCT SUBSTITUTIONS:

1. PROVIDE EQUIPMENT SPECIFIED OR CLEARLY NOTE ON EQUIPMENT SUBMITTAL SUBSTITUTE EQUIPMENT. THE ENGINEER RESERVES THE RIGHT TO REJECT SUBSTITUTE EQUIPMENT, AND THERE IS NO VENUE FOR APPEAL. SUBSTITUTIONS ARE ALLOWED ONLY FOR PRODUCTS SPECIFICATIONS WHICH LIST THREE OR MORE ACCEPTABLE MANUFACTURERS OR STATE "OR APPROVED EQUAL".

H. SERVICEABILITY AND ACCESSIBILITY OF PRODUCTS:

1. PROVIDE WORK AND EQUIPMENT WITH THE PROPER ORIENTATION OF SERVICEABLE COMPONENTS TO ACCESS SPACE PROVIDED.

2. COORDINATE INSTALLATION OF PIPING, DUCTWORK, EQUIPMENT, SYSTEMS COMPONENTS, AND OTHER PRODUCTS TO ALLOW PROPER SERVICE OF ALL ITEMS REQUIRING MAINTENANCE OR REPLACEMENT.

3. PROVIDE ACCESS DOORS/PANELS IN CEILINGS, WALLS, FLOORS, DUCTS, ETC. FOR ACCESS TO TRAPS, VALVES, DAMPERS, AUTOMATIC DEVICES AND ALL SERVICEABLE OR OPERABLE EQUIPMENT IN CONCEALED AREAS. PANELS SHALL BE 18 X 18 INCHES MINIMUM AND LOCKABLE, ELMDOOR OR EQUAL.

I. DUCT AND PIPE ROUTING:

1. ROUTE PIPING AND DUCTWORK PARALLEL WITH BUILDING LINES AND AS HIGH AS POSSIBLE EXCEPT WHERE UNDERGROUND OR SHOWN OTHERWISE ON THE BUILDING PLANS. ROUTE PIPING AND DUCTS TO CLEAR DOORS, WINDOWS, AND OTHER OPENINGS AND TO AVOID OTHER PIPES AND DUCTS, LIGHT FIXTURES, AND SIMILAR ITEMS.

2. CONCEAL PIPES AND DUCTS WHERE ROUTED THROUGH FINISHED AREAS, UNLESS AUTHORIZED BY THE ENGINEER OR OTHERWISE INDICATED ON THE PLANS. WHERE PIPING AND DUCTS ARE ROUTED IN AREAS WITHOUT SUSPENDED CEILINGS, PIPING AND DUCTS SHALL BE ROUTED BETWEEN SOLID OR THROUGH OPEN STRUCTURAL MEMBERS.

J. GENERAL PIPING REQUIREMENTS:

1. FABRICATE AND INSPECT PER THE SPECIFIED CODE(S) IN THE APPLICABLE SECTION(S) OF DIVISION 20, 21, 22, AND 23.

2. PIPE JOINT CONSTRUCTION: JOIN PIPE AND FITTINGS PER THE FOLLOWING REQUIREMENTS AND APPLICABLE CODES.

3. REAM ENDS OF PIPE AND TUBES AND REMOVE BURRS. BEVEL PLAIN ENDS OF STEEL PIPE.

4. DISINFECT/FLUSH: REMOVE SCALE, SLAG, DIRT AND DEBRIS FROM INSIDE AND OUTSIDE OF PIPE AND FITTINGS PRIOR TO ASSEMBLY.

a. WATER SYSTEMS: UTILIZE A NON–FOAMING LIQUID DETERGENT DISPERSANT CLEANER TO REMOVE OIL AND FOREIGN MATERIAL FROM THE PIPING AND EQUIPMENT PRIOR TO THE FINAL FILLING OF THE SYSTEMS. THIS CHEMICAL SHALL NOT BE INJURIOUS TO PERSONS, PIPING, PIPE JOINT COMPOUNDS, PACKING, COILS, VALVES, PUMPS AND THEIR MECHANICAL SEALS, TUBES, GASKETS, OR OTHER PARTS OF THE SYSTEM. FOR EXAMPLE, 50 PPM NALCO 7465 ANTIFOAM AND 25 PPM NALCO 7308 CLEANING AGENT.

b. GAS SYSTEMS: PER SECTION 226300.A

5. FLANGED JOINTS: SELECT APPROPRIATE NON–ASBESTOS GASKET MATERIAL BASED ON FLUID, PRESSURE AND TEMPERATURE REQUIREMENTS.

6. MECHANICAL FITTINGS: VIEGA PRO–PRESS; INSTALL PER APPLICABLE CODE OR MANUFACTURER'S INSTRUCTIONS.

K. LEAK AND PRESSURE TESTING:

1. FLUSH SYSTEM PRIOR TO TEST: PLUMBING PIPING SHALL BE FLUSHED WITH WATER. PNEUMATIC AIR/GAS PIPING SHALL BE FLUSHED WITH NITROGEN UNLESS SPECIFIED OTHERWISE. FLUSH PIPING SYSTEMS UNTIL CLEAN AND FREE OF ALL PARTICULATE MATTER. FLUSH & DISINFECT PLUMBING SYSTEMS IN PRESENCE OF THE BATTELLE CONSTRUCTION MANAGER.

2. TEST PLUMBING SYSTEMS PER THE MOST CURRENT EDITION OF THE PLUMBING CODE. EXERCISE PROPER CARE TO PREVENT DAMAGE. SUBMIT WRITTEN DOCUMENTATION OF FLUSHING, DISINFECTION, AND PRESSURE TESTS. SEE ADDITIONAL AND SUPPLEMENTAL REQUIREMENTS SPECIFIED IN THE FOLLOWING DIVISIONS AND SECTIONS.

3. TESTING SHALL BE DONE BEFORE INSULATION IS INSTALLED ON PIPE AND EQUIPMENT OR THE PIPING OR EQUIPMENT IS OTHERWISE OBSTRUCTED TO DETERMINE IF THE TEST IS SUCCESSFUL.

4. EACH JOINT SHALL BE VISUALLY INSPECTED TO HAVE NO LEAKS DURING TESTING UNLESS SPECIFICALLY EXEMPTED BY THE PROJECT DRAWINGS OR APPLICABLE CODE.

5. LEAKS SHALL BE REPAIRED AND RETESTED UNTIL PIPE SYSTEM CAN PASS THE HYDROSTATIC TEST. SYSTEMS THAT FAIL MORE THAN ONE TEST SHALL BE REPORTED TO THE BATTELLE CONSTRUCTION MANAGER.

6. CONTRACTORS MAY SUBMIT ALTERNATIVE TEST AND FLUSH PROCEDURES THAN THOSE NOTED ON THE DRAWINGS. ALTERNATE PROCEDURES SHALL BE APPROVED BY BATTELLE ENGINEERING PRIOR TO USE.

7. ISOLATE OR REMOVE ALL COMPONENTS THAT CANNOT WITHSTAND THE TEST PRESSURE. IN–SERVICE LEAK TESTING OF ISOLATED AND OTHER CONNECTION POINTS, THAT CAN NOT BE TESTED DURING THE SYSTEM TEST, IS REQUIRED.

8. AT NO TIME SHALL THE TEST PRESSURE EXCEED THE MANUFACTURER'S MAXIMUM ALLOWED TEST PRESSURE OF PIPE, TUBE, AND/OR OTHER FITTINGS AND ACCESSORIES.

9. DOCUMENTATION: SUBMIT COMPLETED TEST REPORT DOCUMENTATION FOR ALL TESTING SPECIFIED IN DIVISION 20, 21, 22, AND 23 TO THE BATTELLE CONSTRUCTION MANAGER. TEST REPORTS TO INCLUDE TEST PERFORMER, TEST PRESSURE, DURATION, MEDIA USED, WITNESS, AND DATE AS A MINIMUM. ITEMS THAT REQUIRE A TEST, BUT DO NOT HAVE DOCUMENTATION WILL NOT BE ACCEPTED AS COMPLETE. INCLUDE TEST REPORT DOCUMENTATION IN O&M MANUAL.

L. SLEEVES, PLATES, BOOTS, AND CURBS:

1. PROVIDE PIPE SLEEVES AT FLOOR WALL AND CEILING/ROOF PENETRATIONS, FLUSH WITH PENETRATED SURFACE, SEAL WATER AND AIR TIGHT WITH POLYURETHANE SEALANT; AT PIPING AND DUCT PENETRATIONS OF EXTERIOR BUILDING CONSTRUCTION.

2. FLOOR, WALL AND CEILING ESCUTCHEON PLATES AND COLLARS: PROVIDE AT PIPING AND DUCT PENETRATIONS.

N. SERVICE INTERRUPTIONS:

1. OBTAIN BATTELLE'S WRITTEN APPROVAL PRIOR TO INTERRUPTING ANY SERVICE INCLUDING WATER, NATURAL GAS, SPECIALTY COMPRESSED GASES, OR SEWER.

Q. PROJECT COMPLETION REQUIREMENTS:

1. OPERATION & MAINTENANCE MANUAL: INCLUDE INSTALLATION INSTRUCTION, OPERATION AND MAINTENANCE INFORMATION, START–UP INSTRUCTIONS, AND SPARE PARTS LISTS. INCLUDE THE NAMES, ADDRESSES, TELEPHONE NUMBERS, AND FAX NUMBER OF MANUFACTURES AND VENDORS OF MATERIALS AND EQUIPMENT. INCLUDE WARRANTY CERTIFICATES FOR PROJECT WORK AND ALL EQUIPMENT.

2. RECORD DRAWINGS: SUBMIT "AS–BUILT" DRAWINGS INDICATING WORK AS REVISED, DETAILED AND ACTUALLY INSTALLED.

3. CERTIFICATIONS: PROVIDE WRITTEN CERTIFICATION FROM THE GOVERNING BUILDING AUTHORITIES STATING THAT ALL WORK HAS BEEN INSPECTED, ACCEPTED, AND COMPLIES WITH APPLICABLE CODES AND ORDINANCES.

4. WARRANTIES AND CERTIFICATES: PROVIDE MINIMUM (OR AS SPECIFIED ELSEWHERE) ONE YEAR WRITTEN WARRANTY CERTIFICATES COVERING ALL MATERIALS AND LABOR FOR ALL MECHANICAL WORK FROM APPLICABLE CONTRACTORS AND VENDORS.

200523 GENERAL DUTY MECHANICAL VALVES

1. VALVES (2" AND UNDER): BRONZE TWO PIECE BODY, CHROME PLATED BRASS BALL, PTFE SEATS AND STUFFING BOX RING, INDEPENDENT PACKING NUT, LEVER HANDLE, THREADED ENDS, 600 WOG, 150 SWP.

2. APPROVED MANUFACTURER: MILWAUKEE VALVE CO, HAMMOND VALVE CO, NIBCO,

200529 HANGARS AND SUPPORTS FOR MECHANICAL PIPING AND EQUIPMENT

R. FABRICATE AND INSTALL PIPING AND TUBING IN ACCORDANCE WITH ASME B31.9 OR THE MOST CURRENT EDITION OF THE PLUMBING CODE AS APPLICABLE. SUPPORT PIPING FROM PRIMARY STRUCTURAL MEMBERS, BEAMS, JOISTS, OR PROVIDE INTERMEDIATE SUPPORTING MEMBERS BETWEEN JOISTS OR BEAMS. PROVIDE ADDITIONAL STRUCTURAL STEEL ANGLES, CHANNELS, FRAMING CHANNELS OR OTHER INTERMEDIATE STRUCTURAL ELEMENTS REQUIRED TO SUPPORT OR HANG PIPING CAPABLE OF WITHSTANDING THE LOADS REQUIRED BY THE APPLICABLE CODE. REUSE EXISTING, WHERE POSSIBLE. FASTENING TO METAL DECK IS PROHIBITED.

S. PROVIDE PIPE SUPPORTS AND HANGERS AS REQUIRED. SUPPORT PIPING AT EACH CHANGE IN DIRECTION. SUPPORT PIPING ON EITHER SIDE OF CONTROL VALVES, PUMPS, AT EQUIPMENT CONNECTIONS, AND WALL PENETRATIONS SO THAT PIPING IS INDEPENDENTLY SUPPORTED. PIPE HANGERS SHALL BE DESIGNED AND MANUFACTURED IN ACCORDANCE WITH MANUFACTURER'S STANDARDIZATION SOCIETY (MSS) SP–58. 1" NPS PIPES AND LARGER SHALL BE SUPPORTED WITH 3/8" ROD MINIMUM.

T. PROVIDE PIPE RACKS, PIPE STANDS, TRAPEZE HANGERS, ETC. AS REQUIRED. PROVIDE ADJUSTABLE HANGERS COMPLETE WITH INSERTS, ADJUSTERS, BOLTS, NUTS, SWIVELS, ALL–THREAD RODS, ETC. FOR PIPING SYSTEMS. DO NOT USE WIRE OR PERFORATED METAL TO SUPPORT PIPING.

U. INSTALL AND APPLY HANGERS PER MANUFACTURER'S STANDARDIZATION SOCIETY (MSS) STANDARD SP–69 (LATEST EDITION) & SP–89 (LATEST EDITION).

V. HVAC DUCTWORK AND EQUIPMENT: PER SMACNA "HVAC DUCT CONSTRUCTION STANDARDS: METAL AND FLEXIBLE" AND "SEISMIC RESTRAINTS MANUAL: GUIDELINES FOR MECHANICAL SYSTEMS", 3RD EDITION.

W. TUBING: 1/2" AND LESS IN DIAMETER, SUPPORT USING FRAMING CHANNEL, CLAMPS, AND ACCESSORIES PER MANUFACTURER'S RECOMMENDATIONS FOR THE APPLICATION. UNISTRUT, SUPER–STRUT, B–LINE.

X. MAXIMUM SPACING:

1. FIRE PIPING: PER NFPA 13

2. PLUMBING AND HVAC STEEL PIPING: PER ASME B31.9; 2 1/2" NPS AND GREATER, EVERY 12 FEET; 1 1/4" TO 2 1/2" NPS, EVERY 10 FEET; 1" NPS, EVERY 9 FEET; 1/2" NPS, EVERY 6 FEET.

H. DO NOT CUT OR DRILL STRUCTURAL MEMBERS.

I. DUCT ATTACHMENTS: SHEET METAL SCREWS, BLIND RIVETS OR SELF–TAPPING TYPE SCREWS COMPATIBLE WITH DUCT MATERIAL.

200553 IDENTIFICATION FOR MECHANICAL PIPING AND EQUIPMENT

A. PIPING IDENTIFICATION SHALL CONFORM WITH ASME A13.1 AND ADM–CM–064 (AVAILABLE ELECTRONICALLY UPON REQUEST) OR AS SPECIFIED ON THE DRAWINGS.

B. MANUFACTURED PIPE MARKERS: PREPRINTED, COLOR–CODED, WITH LETTERING INDICATING SERVICE AND DIRECTION OF FLOW.

1. PIPE WITH OD, INCLUDING INSULATION, LESS THAN 3/4–INCH: SELF ADHESIVE VINYL TAPE.

2. PIPE WITH OD, INCLUDING INSULATION, GREATER THAN 3/4–INCH TO 6–INCH: PRECOILED SEMI–RIGID PLASTIC FORMED TO COVER FULL CIRCUMFERENCE OF PIPE AND TO ATTACH TO PIPE WITHOUT ADHESIVE.

3. ARROWS: INTEGRAL WITH PIPING SYSTEM SERVICE LETTERING TO ACCOMMODATE BOTH DIRECTIONS, OR AS SEPARATE UNIT ON EACH PIPE MARKER TO INDICATE DIRECTION OF FLOW.

4. COLORS:

a. PIPING CONVEYING LIQUIDS AT TEMPERATURES AND PRESSURES LESS THAN 120°F AND 100 PSIG: GREEN BACKGROUND WITH WHITE LETTERS.

b. PIPING CONVEYING GASES: BLUE BACKGROUND WITH WHITE LETTERING

c. PIPING CONVEYING FLAMMABLE, RADIOACTIVE, HAZARDOUS AND/OR TOXIC MATERIAL: YELLOW BACKGROUND WITH BLACK LETTERS.

d. FIRE SUPPRESSION: RED BACKGROUND WITH WHITE LETTERS.

5. INSTALLATION: LOCATE PIPE LABELS, WITH FLOW INDICATION ARROWS SHOWING DIRECTION OF FLOW, ON EACH PIPING SYSTEM IN LOCATIONS AS FOLLOWS:

a. NEAR EACH VALVE AND CONTROL DEVICE

b. NEAR EACH BRANCH CONNECTION, EXCLUDING SHORT TAKEOFFS FOR FIXTURES AND TERMINAL UNITS. WHEN FLOW PATTERN IS NOT OBVIOUS, MARK EACH PIPE AT BRANCH.

c. NEAR MAJOR EQUIPMENT ITEMS AND OTHER POINTS OF ORIGIN AND TERMINATION.

d. SPACED AT MAXIMUM INTERVALS OF 15 FEET ALONG EACH RUN.

C. VALVE LABELS FOR INDOOR AND OUTDOOR LOCATIONS: SELF ADHESIVE VINYL TYPE WITH METAL BACKING.

1. METAL BACKING MATERIAL: 0.032–INCH THICK ALUMINUM

2. DATA (PER DRAWINGS OR BATTELLE REP):

a. ALPHANUMERIC IDENTIFIER

3. LOCATION: ATTACH DIRECTLY TO VALVE.

4. LETTERING: 1/2–INCH HELVETICA

5. SIZE: 1–INCH X 2–1/2–INCH

6. COLOR TO MATCH APPLICABLE CONNECTING PIPING COLOR SCHEME.

7. INSTALLATION: INSTALL TAGS ON VALVES AS INDICATED ON THE DRAWINGS OR PER CONSTRUCTION MANAGER.

RELEASE
05–13–13
DATE
JMK

EDP # S682648–EDP01

DRAWING NO	DRAWING TITLE
REFERENCE DRAWINGS	
NEXT USED ON	

RR	QA BY / DATE	ENGR BY / DATE	CHK BY / DATE	REV BY / DATE	DESCRIPTION	REV NO
REVISIONS						

DRAWN KS KOSCHIK	DATE 3/14/13	U. S. DEPARTMENT OF ENERGY PACIFIC NORTHWEST SITE OFFICE
CHECKED SD BURNETT	5/7/13	Pacific Northwest Division — Battelle — Richland, Washington 99352
ENGR KENNETH D LARSON DK CREVIER	5/7/13	CIVIL LAB 1401 TEM MECHANICAL SPECIFICATIONS
APVD GREG TURPEN	8 MAY 13	
OTHER		
OTHER		PROJ TITLE TEM MICROSCOPE INSTALLATION
APVD FOR IMPLEMENTATION BY BRIAN GREENAWAY	5/9/13	SIZE D · INDEX NO 8516 8900 · BLDG NO 3410 · DWG NO H–3–317134 · REV NO 0 · SCALE NONE · SHEET 3 OF 5

PNNL–D_R0_10/11

SPECIFICATIONS
(UNLESS OTHERWISE NOTED)

D. EQUIPMENT LABELS FOR INDOOR AND OUTDOOR LOCATIONS: SELF ADHESIVE VINYL TAPE, FOR PERMANENT ATTACHMENT ON EQUIPMENT. IF THERE IS NOT ADEQUATE FLAT SPACE ON EQUIPMENT FOR ATTACHMENT OF LABEL, PROVIDE A METAL BACKING PLATE FOR LABEL.

1. METAL BACKING MATERIAL: 0.032–INCH THICK ALUMINUM
2. DATA (PER EQUIPMENT SCHEDULE OR BATTELLE REP):
   - b. ALPHANUMERIC IDENTIFIER
   - c. NOUN DESCRIPTION
3. LOCATION: ACCESSIBLE AND VISIBLE.
4. LETTERING: 1/2–INCH HELVETICA
5. SIZE: 4–INCH X 4–1/2–INCH
6. COLORS:
   - a. EQUIPMENT HANDLING LIQUIDS AT TEMPERATURES AND PRESSURES LESS THAN 120°F AND 100 PSIG: GREEN BACKGROUND WITH WHITE LETTERS.
   - b. EQUIPMENT HANDLING FLAMMABLE, RADIOACTIVE, HAZARDOUS AND/OR TOXIC MATERIAL: YELLOW BACKGROUND WITH BLACK LETTERS.
7. INSTALLATION: INSTALL INDOOR AND/OR OUTDOOR EQUIPMENT LABELS ON OR NEAR EACH PIECE OF MAJOR MECHANICAL EQUIPMENT.

A. DUCT IDENTIFICATION

1. DUCT LABELS: COLOR–CODED SELF ADHESIVE VINYL. INCLUDE DIRECTION OF AIRFLOW AND DUCT SERVICE (SUCH AS SUPPLY, RETURN OR EXHAUST)
2. LETTER SIZE: MINIMUM 1/4–INCH FOR NAME OF UNITS IF VIEWING DISTANCE IS LESS THAN 24 INCHES, 1/2–INCH FOR VIEWING DISTANCES UP TO 72 INCHES AND PROPORTIONATELY LARGER FOR GREATER VIEWING DISTANCES.
3. COLORS:
   - c. EXHAUST DUCTS: YELLOW BACKGROUND WITH BLACK LETTERS.
   - d. ALL OTHERS: BLUE BACKGROUND WITH WHITE LETTERS.
4. INSTALLATION: INSTALL DUCT LABELS ON AIR DUCTS NEAR POINTS WHERE DUCTS ENTER CONCEALED SPACES AND AT MAXIMUM INTERVALS OF 15 FEET IN EACH SPACE WHERE DUCTS ARE EXPOSED OR CONCEALED BY REMOVABLE CEILING.

200700 MECHANICAL PIPING INSULATION

A. INSULATION: 1 – INCH THICK 500°F SNAP–ON FIBERGLASS, WITH A FACTORY APPLIED VAPOR RETARDER ALL SERVICE JACKET (ASJ); AND SELF–SEALING LAP (SSL). APPLY INSULATION CONTINUOUSLY THROUGH HANGERS. INSTALL SADDLES, SHIELDS AND INSERTS ON HYDRONIC PIPING. COVER HANGER INSERTS AND SHIELDS WITH JACKET MATERIAL MATCHING ADJACENT PIPE INSULATION. INSULATION SHALL NOT EXCEED A FLAME SPREAD OF 25 OR A SMOKE DEVELOPMENT OF 50. CERTAINTEED, KNAUF OR JOHNS–MANVILLE. INSULATION THICKNESS AND R–VALUE SHALL MEET OR EXCEED THE REQUIREMENTS OF ASHRAE STANDARD 90.1 OR WAC 51–11, WHICHEVER IS MORE STRINGENT.

B. VAPOR BARRIER COMPOUND: WATER BASED. FIRE RESISTANT AS RECOMMENDED BY INSULATION MANUFACTURER. CONTINUOUS VAPOR BARRIER SHALL BE MAINTAINED OVER ENTIRE LENGTH OF HYDRONIC LINES.

C. REMOVABLE INSULATION PADS: WOVEN FIBERGLASS JACKETING AROUND 2" THICK FIBERGLASS BATT TYPE INSULATION. USE STAINLESS STEEL LACING HOOKS AND WIRE. INSTALL PADS AT VALVES, STRAINERS AND OTHER EQUIPMENT WHERE STANDARD INSULATION IS IMPRACTICAL.

D. PVC FITTING COVERS: FACTORY FABRICATED, 20–MIL THICK, HIGH IMPACT, ULTRAVIOLET RESISTANT PVC. ADHESIVE AS RECOMMENDED BY INSULATION MANUFACTURER.

DIVISION 21 – FIRE SUPPRESSION

211101 FIRE PROTECTION – ABOVE GRADE

A. CODE APPLICABILITY: NFPA 13

B. RUBBER GASKETED FITTINGS FOR USE WITH PLAIN END PIPE SHALL NOT BE USED.

C. LIGHTWALL SPRINKLER PIPE, PER ASTM A135, SHALL NOT BE USED IN SPRINKLER SYSTEMS.

D. PIPE SHALL BE ASTM A53, SCHEDULE 40, STEEL.

E. ALL COMPONENTS USED IN SYSTEM SHALL BE UL/FM APPROVED (HANGERS, HEADS, PIPE, FITTINGS, VALVES, ALARM VALVES, ETC.). ALL PRESSURIZED COMPONENTS SHALL BE RATED FOR 150 PSIG MINIMUM.

F. FITTINGS SHALL BE MALLEABLE IRON, 300 LB. CLASS, SCREWED, ASME B16.3.

G. COUPLING, GROOVED TYPE, LISTED AND APPROVED FOR USE IN SPRINKLER SYSTEM, VICTAULIC STYLE 77 OR GRUVLOC FIG 7001.

H. SPRINKLER HEAD SHALL BE SEMI–RECESSED MOUNTED (PENDENT TYPE), POLISHED CHROME FINISH, 155°F, QUICK RESPONSE RATING, TYCO TO MATCH EXISTING.

I. FLUSH AND LEAK TEST – IN–SERVICE LEAK TEST OVER 24 HOUR AT NORMAL SYSTEM PRESSURE.

J. SUPPORT HANGERS – SEE 200529. HANGERS OR CONCRETE FASTENERS TO MATCH EXISTING AND SHALL COMPLY WITH NFPA 13..

DIVISION 22 – PLUMBING

220500 COMMON WORK RESULTS FOR PLUMBING

A. CONFORM TO SECTION 200500

B. CODE REQUIREMENTS: SECTIONS 220000 – 224999; UPC AND ASME B31.9

C. HANGERS: CONFORM TO 200529. PER THE APPLICABLE CODE, OR A MAXIMUM SPACING FOR HANGERS SHALL BE AS FOLLOWS (WHICHEVER DISTANCE IS LESS):

3. NPS 3/8 AND NPS 1/2: 72 INCHES WITH 3/8–INCH ROD.
4. NPS 3/4: 84 INCHES WITH 3/8–INCH ROD.
5. NPS 1: 96 INCHES WITH 3/8–INCH ROD
6. INSTALL SUPPORTS FOR VERTICAL TUBING EVERY 10 FEET.

D. CONNECTIONS: DRAWINGS INDICATE GENERAL ARRANGEMENT OF PIPING, FITTINGS, AND SPECIALTIES. INSTALL PIPING ADJACENT TO SPECIALTIES AND EQUIPMENT TO ALLOW SERVICE AND MAINTENANCE.

E. FIELD INSPECTIONS: VERIFY CORRECT LABELING FOR EACH FLUID TRANSFER LINE.

221316 PIPING – CONDENSATE DRAIN WASTE

A. COPPER TUBE: ASTM B88 TYPE L HARD DRAWN COPPER WATER TUBE.

1. FITTINGS: ASME B16.29, WROUGHT COPPER OR VIEGA PRO PRESS.
2. JOINTS: ASTM B32, SOLDER, GRADE 50B OR VIEGA PRO PRESS.

DIVISION 23 – HEATING VENTILATION, AND AIR CONDITIONING

230500 COMMON WORK RESULTS FOR HVAC

A. SEE 200500

B. HANGERS: SEE 200529. CONFORM TO 200529. PER THE APPLICABLE CODE, OR A MAXIMUM SPACING FOR HANGERS SHALL BE AS FOLLOWS (WHICHEVER DISTANCE IS LESS)

1. NPS 3/4 OR 1: 8 FEET WITH 3/8–INCH ROD.
2. NPS 1 1/4 OR LARGER: 10 FEET WITH 3/8–INCH ROD

C. INSTALL SUPPORTS FOR VERTICAL PIPING EVERY 10 FEET.

D. CONNECTIONS: DRAWINGS INDICATE GENERAL ARRANGEMENT OF PIPING, FITTINGS, AND SPECIALTIES. INSTALL PIPING ADJACENT TO SPECIALTIES AND EQUIPMENT TO ALLOW SERVICE AND MAINTENANCE.

E. FIELD INSPECTIONS: VERIFY CORRECT LABELING FOR EACH FLUID TRANSFER LINE.

F. TEST CERTIFICATION: CERTIFY THAT SPECIFIED TESTS, INSPECTIONS, AND PROCEDURES HAVE BEEN PERFORMED AND CERTIFY REPORT RESULTS. INCLUDE 1) THE INSPECTION PERFORMED. 2) PROCEDURES, MATERIALS, AND GASES USED. 3) TEST METHOD USED. 4) RESULT OF TEST.

232113 HYDRONIC PIPING

A. INSTALLATION SHALL CONFORM TO ASME B31.9 FOR A SYSTEM MAXIMUM ALLOWABLE WORKING PRESSURE OF 100 PSIG.

B. PIPING

1. PIPE (2" AND UNDER): TYPE "L" HARD DRAWN COPPER TUBING PER ASTM B88.
2. FITTINGS (2" AND UNDER): WROUGHT COPPER SOLDER JOINT TYPE PER ASME B16.22 OR VIEGA PRO PRESS.

C. PIPE INSULATION: SEE 200700

D. THERMOMETER:

1. TRERICE, MILJOCO, WEKSLER, OR WEISS, BIMETALLIC ADJUSTABLE ANGLE DIAL THERMOMETER. STAINLESS STEEL OR CAST ALUMINUM CASE AND FRAME, CLEAR ACRYLIC PLASTIC WINDOW FRONT, 3"–3–1/2" DIAMETER, EXTENDED NECK SUITABLE FOR INSULATED PIPING AS REQUIRED. CHILLED WATER SCALE RANGE: 0°F TO 100°F, HEATING WATER SCALE RANGE: 100°F TO 250°F. PROVIDE WITH COMPATIBLE THERMOMETER SOCKETS.

E. TEST PLUG: BRASS BODY AND CAP WITH NEOPRENE BODY SEAL, CAP TO BE STRAPPED TO BODY. USE EXTENDED BODY TYPE IF PIPING IS INSULATED. PETERSON EQUIPMENT CO. "PETE'S PLUG" OR EQUAL.

F. VALVES: SEE 200523

G. PRESSURE GAUGE: 0–200 PSI, 2–1/2" DIAL, LIQUID FILLED 1/4" NPT BOTTOM CONNECTION, WEKSLER M# BY42YPH4LW OR SIMILAR.

H. PIPE HANGERS: SEE 200529

I. STRAINER (2" AND UNDER): BRONZE CONSTRUCTION, Y–PATTERN, THREADED CONNECTION, 20 MESH MONEL OR STAINLESS STEEL SCREEN, 400 PSIG WORKING PRESSURE. WATTS MODEL777–M1 OR EQUAL.

J. FLEXIBLE CONNECTORS: DOUBLE SPHERICAL TYPE, EPDM/KEVLAR CONSTRUCTION, FLANGED CONNECTIONS, 225 PSIG WORKING PRESSURE. MASON INDUSTRIES MODEL SFDEJ.

K. DRAIN VALVE: 3/4" MALE THREAD, BRONZE BODY WITH ALUMINUM HAND WHEEL, 3/4" HOSE CONNECTION ON OUTLET. NIBCO MODEL 74CL.

L. MANUAL AIR VENT: 30 PSIG WORKING PRESSURE, 1/8" NPT, 1/16" OD TUBING DRAIN. HOFFMAN MODEL 790.

M. TESTING: PERFORM HYDROSTATIC TESTING PER ASME B31.9 ON ALL NEW PIPING. TEST PRESSURE SHALL BE 150 PSIG. AN IN–SERVICE TEST IS ACCEPTABLE AT TIE–IN POINTS AND ANY OTHER LOCATION WHERE A HYDROSTATIC TEST IS NOT FEASIBLE. USE OF THE SYSTEM MEDIA IS ACCEPTABLE FOR TESTING IF IT IS NON HAZARDOUS.

233000 HVAC AIR DISTRIBUTION

A. HVAC – SMACNA – WORK SHALL BE IN ACCORDANCE WITH SMACNA, 2005 HVAC DUCT CONSTRUCTION STANDARDS, METAL AND FLEXIBLE, PRESSURE CLASS 2" wg DOWNSTREAM OF VAV UNIT, 4" UPSTEAM OF VAV UNIT.

B. SUPPLY, EXHAUST, AND TRANSFER DUCT: GALVANIZED STEEL PER ASTM A653, G90 COATING. FABRICATE AND INSTALL IN ACCORDANCE WITH SMACNA "2005 DUCT CONSTRUCTION STANDARDS." PRESSURE CLASSIFICATION SHALL BE 2" WG. ON LOW PRESSURE SIDE OF THE TERMINAL UNITS AND SHALL BE 4" ON THE MEDIUM PRESSURE SIDE OF THE TERMINAL UNIT. DUCTWORK SHALL BE SEALED PER SMACNA SEAL CLASSIFICATION "A".

1. ALL ROUND DUCT SHALL UTILIZE SPIRAL SEAM, "SNAP–LOCK" TYPE LONGITUDINAL SEAM IS NOT ACCEPTABLE.
2. ROUND ELBOWS SHALL HAVE A CENTERLINE RADIUS OF 1–1/2 OF DUCT DIAMETER; 90 DEGREE TYPE SHALL HAVE A MINIMUM OF 5 GORES, 45 DEGREE TYPE SHALL HAVE A MINIMUM OF 3 GORES.
3. INSTALL TURNING VANES IN ALL RECTANGULAR ELBOWS UNLESS NOTED OTHERWISE ON DRAWINGS. VANES SHALL BE DOUBLE WALL TYPE.
4. DUCT SEALER: WATER BASED, FLEXIBLE ADHESIVE SEALANT, RESISTANT TO UV LIGHT WHEN CURED, UL 723 LISTED AND COMPLYING WITH 25/50 FIRE/SMOKE RATING.

C. FLEXIBLE DUCT: THERMAFLEX MODEL M–KC OR M–KW. MAXIMUM LENGTH OF FLEX DUCT SHALL NOT EXCEED 5 FEET.

D. HANGERS AND UL SUPPORTS: SEE 200529

E. DUCT LINER: JOHNS MANVILLE TUF–SKIN OR APPROVED EQUAL. ATTACH INSULATION USING MECHANICAL FASTNERS PER NAIMA AH124. LINER SHALL HAVE FIRE HAZARD CLASSIFICATION: 25/50 (PER ASTM E84 AND UL 723 AND CAN/ULC S102–M88). PROVIDE WITH LABELS INDICATING COMPLIANCE WITH NPFA 90A AND 90B.

F. EXTERNAL DUCT WRAP: FOIL KRAFT PAPER FACED BLANKET TYPE FIBERGLASS INSULATION, 1" THICK, DESIGNED FOR WRAPPING HEATING, COOLING, AND VENTILATING DUCTWORK. CERTAINTEED STANDARD (FSK) DUCT WRAP, OR APPROVED EQUAL. FLAME SPREAD AND SMOKE DEVELOPED RATING SHALL NOT EXCEED 25/50 PER ASTM E–84 TEST.

230800 TESTING AND BALANCING

A. FINAL TESTING ADJUSTING AND BALANCING SHALL BE PERFORMED BY BATTELLE.

B. AIR BALANCE SHALL BE COMPLETED AFTER ALL DUCT INSTALLATION AND CONSTRUCTION IS COMPLETE.

C. WATER BALANCE SHALL BE COMPLETED AFTER ALL HYDRONIC INSTALLATION AND CONSTRUCTION IS COMPLETE.

D. PERFORM FUNCTIONAL TESTING OF NEW EQUIPMENT AND/OR CONTROL SYSTEMS. DOCUMENT TESTING ON FORMS PROVIDED BY BATTELLE.

1. FUNCTIONAL TESTING SHALL CONSIST OF ROOM TEMPERATURE STABILITY VERIFICATION. THE ROOM TEMPERATURE SHALL BE MAINTAINED WITHIN +/– 0.1°F OF SETPOINT. SHOULD THE TEMPERATURE VERIFICATION FAIL, THE CONTROL SYSTEM PROGRAMMING AND ALGORITHMS SHALL BE ADJUSTED AND ANOTHER 24 HOUR TEST SHALL BE PERFORMED. REPEAT UNTIL ROOM TEMPERATURE STABILITY IS ACHIEVED.
2. THE ROOM TEMPERATURE SHALL BE MONITORED BY BOTH THE CONTROL SYSTEM TEMPERATURE TRENDING AND A SECONDARY TEMPERATURE RECORDING DEVICE.

DRAWING NO	DRAWING TITLE
REFERENCE DRAWINGS	
NEXT USED ON	

RR	QA BY / DATE	ENGR BY / DATE	CHK BY / DATE	REV BY / DATE	DESCRIPTION	REV NO
REVISIONS						

RELEASE
05–13–13
DATE
JMK

EDP # S682648–EDP01

DRAWN KS KOSCHIK	DATE 3/14/13	U. S. DEPARTMENT OF ENERGY PACIFIC NORTHWEST SITE OFFICE
CHECKED SD BURNETT	5/7/13	Pacific Northwest Division — Battelle — Richland, Washington 99352
ENGR KENNETH D LARSON D CREVIER	5/7/13	CIVIL
APVD GREG TURPEN	8 MAY 13	LAB 1401 TEM
OTHER		MECHANICAL SPECIFICATIONS
OTHER		PROJ TITLE TEM MICROSCOPE INSTALLATION
APVD FOR IMPLEMENTATION BY BRIAN GREENAWAY	5/9/13	SIZE D · INDEX NO 8508 8516 · BLDG NO 3410 · DWG NO H–3–317134 · REV NO 0 · SCALE NONE · SHEET 4 OF 5

PNNL–D_R0_10/11

SPECIFICATIONS
(UNLESS OTHERWISE STATED)

DIVISION 26 – ELECTRICAL

260500 BASIC ELECTRICAL MATERIALS AND METHODS

A. SUBMITTALS: NO LATER THAN DATE OF REQUEST FOR SUBSTANTIAL COMPLETION INSPECTION, SUBMIT INSPECTION REPORT VERIFYING ACCURACY OF UPDATED PANEL SCHEDULE AND ALL LABELING.

B. ELECTRICAL (GOVERNMENT) – INSTALLATION SHALL BE IN ACCORDANCE WITH NATIONAL ELECTRICAL CODE (NEC) VERSION [2008]. INSTALLATION WILL BE CHECKED FOR CODE COMPLIANCE BY A DESIGNATED BATTELLE INSPECTOR. REWORK MAY BE REQUIRED TO MEET CODE AS NEEDED.

C. ANY CONFLICTS BETWEEN THE ENGINEERING DRAWINGS AND ELECTRICAL CODE MUST BE RESOLVED WITH THE BATTELLE CONSTRUCTION MANAGER BEFORE PROCEEDING WITH INSTALLATION.

D. PROVIDE CORRECT, TYPEWRITTEN PANEL DIRECTORIES OF NEW OR REVISED PANELBOARD CIRCUITS.

E. ELECTRICAL COMPONENT IDENTIFICATION SHALL CONFORM WITH BATTELLE ADMINISTRATIVE PROCEDURE ADM–CM–064. USE BLACK LETTERS ON WHITE BACKGROUND FOR NORMAL POWER AND RED LETTERS ON WHITE BACKGROUND FOR STANDBY/EMERGENCY POWER AND WHITE LETTERS ON BLUE BACKGROUND FOR UPS POWER. LETTERS SHALL BE 3/8" MIN. HEIGHT.

F. ALL ELECTRICAL OUTAGES OF EXISTING CIRCUITS SHALL BE SCHEDULED TO ALLOW FOR PLANNED SHUTDOWN OF EXISTING EQUIPMENT.

G. COORDINATE ARRANGEMENT, MOUNTING, AND SUPPORT OF ELECTRICAL EQUIPMENT WITH MECHANICAL SYSTEMS.

H. ALL INSTALLED ELECTRICAL EQUIPMENT SHALL BE LISTED, LABELED, OR OTHERWISE INDICATED AS ACCEPTABLE BY A NATIONALLY ACCREDITED TESTING LABORATORY (UL LISTED AND LABELED EQUIPMENT). EXCEPTIONS TO THE UL LISTING OF ONE OF A KIND EQUIPMENT WILL BE INSPECTED FOR CONFORMANCE WITH THE NATIONAL ELECTRICAL CODE.

260519 LOW VOLTAGE CONDUCTORS AND CABLES

A. SUBMITTALS: TEST REPORTS ON ALL CABLE TESTING.

B. CONDUCTOR INSULATION: WIRE SHALL BE COPPER, #12 AWG MINIMUM SIZE, FOR POWER WIRING, WITH 90 DEGREE C, FLAME RETARDANT HEAT RESISTANT, THERMOPLASTIC, 600 VOLT INSULATION, TYPE THHN.

C. BRANCH CIRCUITS: TYPE THHN, SINGLE CONDUCTORS IN RACEWAY, TWISTED.

D. BRANCH CIRCUITS CONCEALED IN CEILINGS, WALLS, AND PARTITIONS: TYPE THHN, SINGLE CONDUCTORS IN RACEWAY, TWISTED.

E. CLASS 1 CONTROL CIRCUITS: TYPE THHN, IN RACEWAY.

F. CLASS 2 CONTROL CIRCUITS: TYPE THHN, IN RACEWAY.

G. CORD DROPS AND PORTABLE APPLIANCE CONNECTIONS: TYPE SO OR SOW, HARD SERVICE CORD WITH STAINLESS–STEEL, WIRE–MESH, STRAIN RELIEF DEVICE AT TERMINATIONS TO SUIT APPLICATION.

H. ELECTRICAL CONDUCTORS SHALL BE COLOR CODED TO MEET IDENTIFICATION REQUIREMENTS IN NEC 210.5(C) AS FOLLOWS:

1. 480V, 3 PHASE, A, B, C COLORS RED, YELLOW AND BLUE, RESPECTIVELY. NEUTRAL WHITE OR GRAY EXCEPT WHEN INSTALLED IN CONDUIT SHARED WITH 120V TO GROUND. IN THOSE CASES THE 277V TO GROUND SHOULD HAVE A WHITE WITH RED STRIPE NEUTRAL.

2. 240V, 1 PHASE, COLORS BLACK AND BROWN. NEUTRAL COLOR WHITE OR GRAY. 3 PHASE, 3 WIRE, COLORS BLACK, PURPLE AND BROWN.

3. 240V, 3 PHASE, 4 WIRE, A, B, C COLORS BLACK, ORANGE AND BROWN, RESPECTIVELY, WITH B PHASE THE HIGH OR "WILD" LEG. ORANGE COLOR IDENTIFICATION IS ALSO REQUIRED FOR FEEDERS IN THIS CONFIGURATION (ARTICLE 215–8). NEUTRAL COLOR WHITE OR GRAY.

4. 208/120V, 3 PHASE, 4 WIRE, A, B, C COLORS BLACK, PURPLE AND BROWN, RESPECTIVELY. NOTE: BLACK AND BROWN COLORS IN 240/120V OR 208/120V SYSTEMS ARE 120V TO GROUND IN BOTH CASES AND ORANGE WILD LEG IS 208V TO GROUND.

I. ALL NEW POWER CONDUCTORS TO THE LAB 1401 SPACE SMALLER THAN #2 AWG WILL BE TWISTED TOGETHER. TWIST RATE WILL BE 4 TURNS PER FOOT FOR #4 TO #8 AWG, AND 5 TURNS PER FOOT FOR ALL OTHER CONDUCTORS.

J. USE MANUFACTURER–APPROVED PULLING COMPOUND OR LUBRICANT WHERE NECESSARY; COMPOUND USED MUST NOT DETERIORATE CONDUCTOR OR INSULATION. DO NOT EXCEED MANUFACTURER'S RECOMMENDED MAXIMUM PULLING TENSIONS AND SIDEWALL PRESSURE VALUES.

K. USE PULLING MEANS, INCLUDING FISH TAPE, CABLE, ROPE, AND BASKET–WEAVE WIRE/CABLE GRIPS, THAT WILL NOT DAMAGE CABLES OR RACEWAY.

L. INSULATING WIRE NUTS SHALL BE USED FOR SPLICES OF #8 AND SMALLER CONDUCTORS. INSULATING TAPE SHALL BE 3M #33 OR #88.

M. TIGHTEN ELECTRICAL CONNECTORS AND TERMINALS ACCORDING TO MANUFACTURER'S PUBLISHED TORQUE–TIGHTENING VALUES. IF MANUFACTURER'S TORQUE VALUES ARE NOT INDICATED, USE THOSE SPECIFIED IN UL 486A AND UL 486B.

N. MAKE SPLICES AND TAPS THAT ARE COMPATIBLE WITH CONDUCTOR MATERIAL AND THAT POSSESS EQUIVALENT OR BETTER MECHANICAL STRENGTH AND INSULATION RATINGS THEN UNSPLICED CONDUCTORS.

O. APPLY FIRESTOPPING TO ELECTRICAL PENETRATIONS OF FIRE–RATED FLOOR AND WALL ASSEMBLIES TO RESTORE ORIGINAL FIRE–RESISTANCE RATING OF ASSEMBLY.

P. AFTER INSTALLING CONDUCTORS AND CABLES AND BEFORE ELECTRICAL CIRCUITRY HAS BEEN ENERGIZED, TEST CONDUCTORS FOR COMPLIANCE WITH FOLLOWING REQUIREMENTS:

1. PERFORM CONTINUITY TESTS TO ENSURE CORRECT CABLE CONNECTION.

2. PERFORM INSULATION–RESISTANCE TESTS ON EACH CONDUCTOR WITH RESPECT TO GROUND AND ADJACENT CONDUCTORS. APPLIED POTENTIAL SHALL BE 500 VDC FOR 300V CABLES AND 1000 VDC FOR 600V CABLES.

Q. TEST REPORTS: PREPARE A WRITTEN REPORT TO RECORD THE FOLLOWING:

1. TEST PROCEDURES USED.

2. TEST RESULTS THAT COMPLY WITH REQUIREMENTS.

3. TEST RESULTS THAT DO NOT COMPLY WITH REQUIREMENTS AND CORRECTIVE ACTION TAKEN TO ACHIEVE COMPLIANCE WITH REQUIREMENTS.

R. REMOVE AND REPLACE MALFUNCTIONING UNITS AND RETEST AS SPECIFIED ABOVE.

260526 GROUNDING AND BONDING

A. BOLTED CONNECTORS FOR CONDUCTORS AND PIPES: COPPER OR COPPER ALLOY, BOLTED PRESSURE–TYPE, WITH AT LEAST TWO BOLTS.

B. WELDED CONNECTORS: EXOTHERMIC–WELDING KITS OF TYPES RECOMMENDED BY KIT MANUFACTURER FOR MATERIALS BEING JOINED AND INSTALLATION CONDITIONS.

C. CONDUCTORS: INSTALL SOLID CONDUCTOR FOR NO. 8 AWG AND SMALLER, AND STRANDED CONDUCTORS FOR NO. 6 AWG AND LARGER, UNLESS OTHERWISE INDICATED.

D. CONDUCTOR TERMINATIONS AND CONNECTIONS:

1. PIPE AND EQUIPMENT GROUNDING CONDUCTOR TERMINATIONS: BOLTED CONNECTORS.

2. CONNECTIONS TO STRUCTURAL STEEL: WELDED CONNECTORS.

E. PROVIDE A GREEN EQUIPMENT WIRE, #12 AWG COPPER MINIMUM, FOR ALL NEW CIRCUITS. SIZE IN ACCORDANCE WITH NEC 250.122. ANY ISOLATED GROUND CONDUCTORS SHALL BE GREEN WITH YELLOW STRIPE.

F. GROUNDING CONDUCTORS: ROUTE ALONG SHORTEST AND STRAIGHTEST PATHS POSSIBLE, UNLESS OTHERWISE INDICATED OR REQUIRED BY CODE. AVOID OBSTRUCTING ACCESS OR PLACING CONDUCTORS WHERE THEY MAY BE SUBJECTED TO STRAIN, IMPACT, OR DAMAGE.

260533 RACEWAY AND BOXES FOR ELECTRICAL SYSTEMS

A. RACEWAYS SHALL COMPLY WITH THE FOLLOWING APPLICATIONS, UNLESS OTHERWISE INDICATED:

1. EXPOSED INTERIOR CONDUITS, NOT SUBJECT TO PHYSICAL DAMAGE: RIGID STEEL CONDUIT (RMC) OR LIQUID–TIGHT FLEXIBLE METAL CONDUIT (LFMC).

2. EXPOSED CONDUITS AND SUBJECT TO SEVERE PHYSICAL DAMAGE: RMC.

3. CONCEALED IN CEILINGS AND INTERIOR WALLS AND PARTITIONS: RMC.

4. RACEWAYS OR OPTICAL FIBER OR COMMUNICATIONS CABLE IN SPACES USED: ELECTRICAL METALLIC TUBING (EMT).

B. FITTINGS FOR CONDUIT (INCLUDING ALL TYPES AND FLEXIBLE AND LIQUID–TIGHT): NEMA FM 1; SHALL BE LISTED FOR TYPE AND SIZE RACEWAY WITH WHICH USED, AND FOR APPLICATION AND ENVIRONMENT IN WHICH INSTALLED.

C. MINIMUM RACEWAY SIZE: 3/4–INCH TRADE SIZE.

D. RACEWAYS FITTINGS: COMPATIBLE WITH RACEWAYS AND SUITABLE FOR USE AND LOCATION. USE COMPRESSION FITTINGS ON EMT.

E. KEEP RACEWAYS AT LEAST 6 INCHES AWAY FROM PARALLEL RUNS OF STREAM OR HOT–WATER PIPES.

F. COMPLETE RACEWAY INSTALLATION BEFORE STARTING CONDUCTOR INSTALLATION.

G. CONCEAL CONDUIT WITHIN FINISHED WALLS, CEILINGS, AND FLOORS, UNLESS OTHERWISE INDICATED.

H. SURFACE MOUNTED RACEWAYS SHALL RUN PARALLEL TO CEILING AND VERTICAL RUNS SHALL BE PERPENDICULAR TO FLOOR.

I. SUPPORT ALL RACEWAYS AS REQUIRED BY NEC.

J. RACEWAY TERMINATIONS AT LOCATIONS SUBJECT TO MOISTURE OR VIBRATION: USE INSULATING BUSHINGS TO PROTECT CONDUCTORS, INCLUDING CONDUCTORS SMALLER THAN NO. 4 AWG.

K. INSTALL PULL WIRES IN EMPTY RACEWAYS. USE POLYPROPYLENE OR MONOFILAMENT PLASTIC LINE WITH NOT LESS THAN 200–LB TENSILE STRENGTH. LEAVE AT LEAST 12 INCHES OF SLACK AT EACH END OF PULL WIRE.

L. FLEXIBLE CONDUIT CONNECTIONS: USE MAXIMUM OF 72 INCHES OF FLEXIBLE CONDUIT FOR RECESSED AND SEMIRECESSED LIGHTING FIXTURES, EQUIPMENT SUBJECT TO VIBRATION, NOISE TRANSMISSION OR MOVEMENT; TRANSFORMERS, MOTORS, AND UPS.

M. WHERE CONDUITS PENETRATE A FIRE RATED WALL, FLOOR OR CEILING, THE OPENING AROUND THE CONDUIT SHALL BE SEALED WITH CAULK CP 25 OR FIRE BARRIER MOLDABLE PUTTY AS MANUFACTURED BY 3M. THE INSTALLATION SHALL CONFORM TO A UL LISTED DETAIL.

N. ALL PULL, JUNCTION, AND SPLICE BOXES SHALL BE FURNISHED AND INSTALLED, EVEN IF NOT SHOWN ON DRAWINGS.

O. SURFACE METAL RACEWAY (SMR) SHALL BE 2 CHANNEL AND MATCH EXISTING USED IN RM 1401.

262726 WIRING DEVICES

A. SUBMITTALS: TEST REPORTS ON ALL WIRING DEVICES, INCLUDING VERIFICATION OF DEVICE LABELS AND CORRECT CIRCUIT IDENTIFICATION.

B. CONVENIENCE RECEPTACLES: DUPLEX, STRAIGHT BLADE, GRAY IN COLOR, 125 V, 20 AMP, 2 POLE 3 WIRE GROUNDING, FLUSH MOUNT, COMPLY WITH NEMA WD 1, NEMA 5–20R, AND UL 498. WITH STAINLESS STEEL COVER

C. TWISTLOCK RECEPTACLES: SINGLE, FLUSH MOUNT, BLACK NYLON FACE, BACK AND SIDE WIRED, 2 POLE 3 WIRE GROUNDING, 250VAC, 15 OR 20 AMP. NEMA L6–15R OR L6–20R.

D. PLATE–SECURING SCREWS: METAL WITH HEAD COLOR TO MATCH PLATE FINISH.

E. WALL PLATES FOR FINISHED SPACES: GRAY NYLON COVER PLATES ON SMR OUTLETS, WHITE NYLON COVER PLATES AT LIGHT SWITCHES.

F. WIRING DEVICE MOUNTING HEIGHTS SHALL BE SAME AS EXISTING DEVICES, UNLESS OTHERWISE NOTED.

G. TAKE STEPS TO ENSURE THAT DEVICES AND THEIR BOXES ARE PROTECTED. DO NOT PLACE WALL FINISH MATERIALS OVER DEVICE BOXES AND DO NOT CUT HOLES FOR BOXES WITH ROUTERS THAT ARE GUIDED BY RIDING AGAINST OUTSIDE OF THE BOXES.

1. KEEP OUTLET BOXES FREE OF PLASTER, DRYWALL JOINT COMPOUND, MORTAR, CEMENT, CONCRETE, DUST, PAINT, AND OTHER MATERIAL THAT MAY CONTAMINATE THE RACEWAY SYSTEM, CONDUCTORS, AND CABLES.

2. INSTALL WIRING DEVICES AFTER ALL WALL PREPARATION, INCLUDING PAINTING, IS COMPLETE.

3. DO NOT STRIP INSULATION FROM CONDUCTORS UNTIL JUST BEFORE THEY ARE SPLICED OR TERMINATED ON DEVICES.

4. STRIP INSULATION EVENLY AROUND THE CONDUCTOR USING TOOLS DESIGNED FOR THE PURPOSE. AVOID SCORING OR NICKING OF SOLID WIRE OR CUTTING STRANDS FROM STANDARD WIRE.

5. EXISTING CONDUCTORS:

a. CUT BACK AND PIGTAIL, OR REPLACE ALL DAMAGED CONDUCTORS.

b. STRAIGHTEN CONDUCTORS THAT REMAIN AND REMOVE CORROSIVE AND FOREIGN MATTER.

c. PIGTAILING EXISTING CONDUCTORS IS PERMITTED PROVIDED THE OUTLET BOX IS LARGE ENOUGH.

6. CONNECT DEVICES TO BRANCH CIRCUITS USING PIGTAILS THAT ARE NOT LESS THAN 6 INCHES (152 mm) IN LENGTH.

7. TIGHTEN UNUSED TERMINAL SCREWS ON THE DEVICE.

8. RECEPTACLES: IDENTIFY PANELBOARD AND CIRCUIT NUMBER FROM WHICH SERVED.

9. PROVIDE DOCUMENTED TESTING OF ALL WIRING DEVICES AND VERIFICATION OF LABELING TO BATTELLE CONSTRUCTION MANAGER.

DIVISION 28 – ELECTRONIC SAFETY AND SECURITY

283100 FIRE DETECTION AND ALARM

A. FIRE ALARM SYSTEM AND COMPONENTS SHALL BE INSTALLED IN ACCORDANCE WITH NFPA 72, 2010 EDITION.

B. ELECTRICAL COMPONENTS SHALL BE LISTED AND LABELED AS DEFINED IN NFPA 70, ARTICLE 100, BY A TESTING AGENCY ACCEPTABLE TO THE AUTHORITY HAVING JURISDICTION, AND MARKED FOR INTENDED USE.

C. OUTAGES OF EXISTING FIRE ALARM SYSTEM SHALL BE SCHEDULED AND PLANNED AT LEAST 3 DAYS IN ADVANCE OF PROPOSED INTERRUPTION OF FIRE ALARM SERVICE. DO NOT PROCEED WITH FIRE ALARM SYSTEM OUTAGE WITHOUT BATTELLE CONSTRUCTION MANAGER'S WRITTEN PERMISSION.

D. FIRE ALARM ELECTRICAL CONDUCTORS SHALL BE SAME COLOR AND TYPE AS THE EXISTING WIRING.

E. FIRE ALARM SYSTEM LOW VOLTAGE WIRING SHALL BE INSTALLED IN A DEDICATED RACEWAY NOT USED FOR ANY OTHER WIRE OR CABLE.

F. FIRE ALARM JUNCTION BOXES SHALL BE PAINTED RED. JUNCTION BOX COVERS SHALL BE PAINTED RED AND BE LABELED WITH WORD "FIRE" ON WHITE LABEL WITH RED LETTERS.

G. UPON COMPLETION OF WORK AN ACCEPTANCE TEST PROCEDURE WILL BE REQUIRED TO VERIFY PROPER OPERATION OF THE FIRE ALARM SYSTEM AND NEW COMPONENTS INSTALLED.

H. BATTELLE FIRE PROTECTION ENGINEER WILL REVISE THE PROGRAM TEXT IN THE FIRE ALARM CONTROL PANEL TO REFLECT THE NEW LOCATION OF DEVICES.

DRAWING NO	DRAWING TITLE
REFERENCE DRAWINGS	
NEXT USED ON	

RR	QA BY / DATE	ENGR BY / DATE	CHK BY / DATE	REV BY / DATE	DESCRIPTION	REV NO
REVISIONS						

RELEASE
05–13–13
DATE
JMK

EDP # S682648–EDP01

DRAWN KJ COALY	DATE 3/14/13	U. S. DEPARTMENT OF ENERGY PACIFIC NORTHWEST SITE OFFICE
CHECKED SD BURNETT	5/7/13	Pacific Northwest Division — Battelle — Richland, Washington 99352
ENGR KENNETH D LARSON / AL MINTON	5/7/13	CIVIL
APVD GREG TURPEN	8 MAY 13	LAB 1401 TEM
OTHER		ELECTRICAL SPECIFICATIONS
OTHER		PROJ TITLE TEM MICROSCOPE INSTALLATION
APVD FOR IMPLEMENTATION BY BRIAN GREENAWAY	5/9/13	SIZE D · INDEX NO 7301 · BLDG NO 3410 · DWG NO H–3–317134 · REV NO 0 · SCALE NONE · SHEET 5 OF 5

PNNL–D_R0_10/11

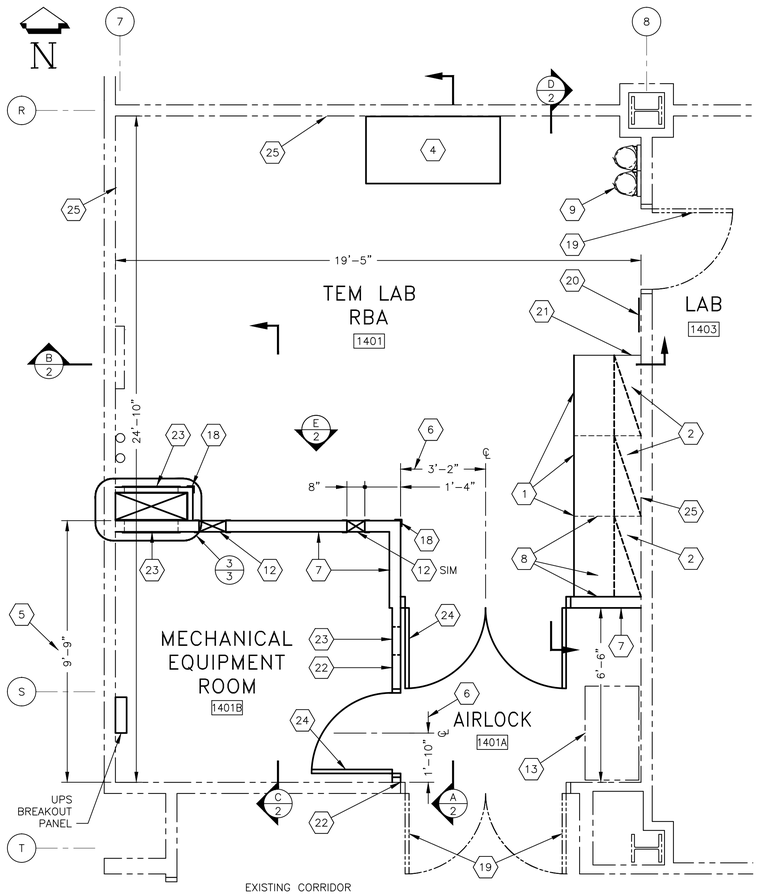

FLOOR PLAN

SCALE: 3/8" = 1'-0"

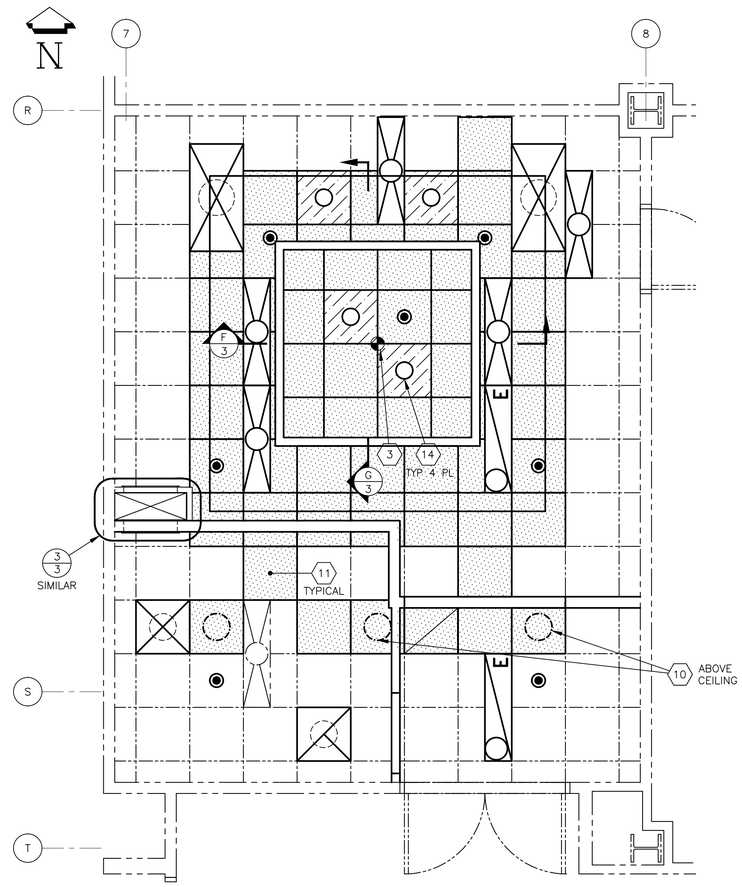

REFLECTED CEILING PLAN

SCALE: 3/8" = 1'-0"

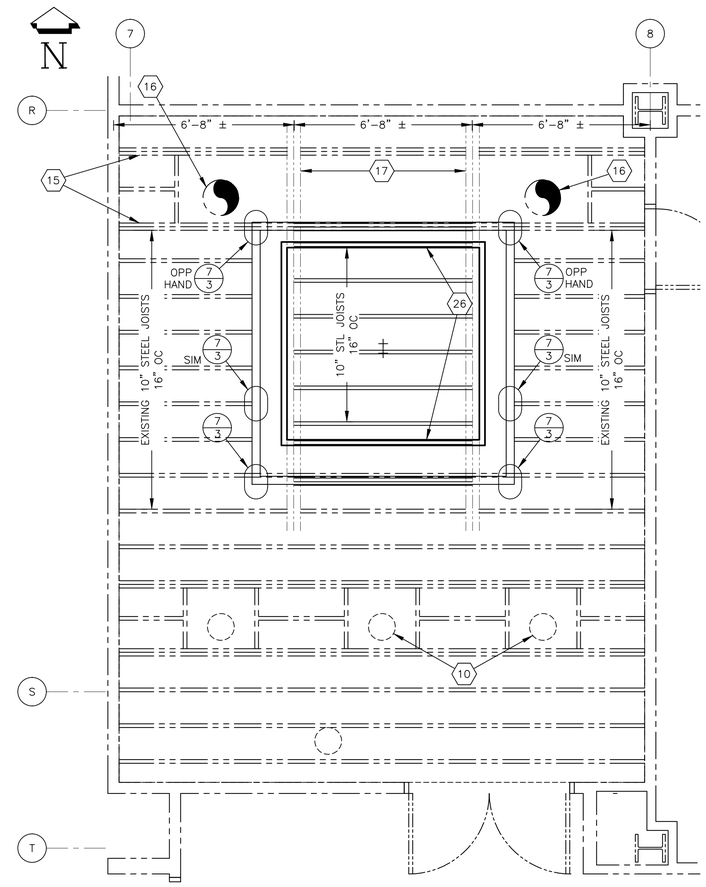

MODIFIED STRUCTURAL CLG FRAMING PLAN

SCALE: 3/8" = 1'-0"

GENERAL NOTES

(UNLESS OTHERWISE SPECIFIED)

1. SEE H-3-317134, SHEET 1 FOR LEGEND CONTAINING TYPICAL SYMBOLS, ABBREVIATIONS, AND KEY PLANS.

SHEET NOTES

1. (3) EXISTING 36-INCH SEGMENTS OF LOWER CABINET TO BE RELOCATED AS SHOWN ON FLOOR PLAN.
2. (3) EXISTING 36-INCH SEGMENTS OF UPPER CABINET TO BE RELOCATED AS SHOWN ON FLOOR PLAN.
3. CENTER OF MICROSCOPE HOIST. SEE FLOOR PLAN ON H-3-317136, SHEET 1.
4. FREESTANDING TABLE TO BE SUPPLIED BY BATTELLE (NIC).
5. DIMENSION FROM FACE OF EXISTING WALL TO FACE OF STUD ON NEW WALL.
6. DIMENSION FROM OUTSIDE FACE OF GYPSUM BOARD ON NEW WALL TO CENTERLINE OF OPENING
7. WALL WITH 362S137-33 (3 5/8") METAL STUDS (16-INCHES OC.) WITH 5/8" TYPE X GYPSUM BOARD EACH SIDE (PAINTED). SEE DETAIL 4 ON H-3-317135, SHEET 3.
8. EXISTING BLACK EPOXY RESIN COUNTERTOP AND BACKSPLASH TO BE RELOCATED AS NOTED ON FLOOR PLAN. FIELD MEASURE AND CUT TO FIT. PROVIDE NEW COUNTER SUPPORT ANGLE ALONG SOUTH WALL.
9. TWO OF THE EXISTING GAS BOTTLE WALL BRACKETS TO BE RELOCATED NEXT TO THE EXISTING DOOR INTO ADJOINING LAB 1403. CONTRACTOR TO ATTACH BRACKET DIRECTLY INTO AT LEAST ONE EXISTING STUD WITH THE SECOND FASTENER SCREWING INTO 3/4" PLYWOOD INSIDE WALL. REUSE EXISTING FASTENERS. MOUNT BRACKETS AT SAME HEIGHT AS PREVIOUS LOCATION.
10. AT EXISTING 12"ø SHEET METAL DUCT TO BE ABANDONED, ADD FRAMING, PLYWOOD AND 5-LAYER SHIELDING APPLICATION IN THIS AREA TO CLOSE OFF THE OPENING, TYPICAL 2 PLACES. SEE SPECIFICATION SECTION 134900 FOR SHIELDING REQUIREMENTS.
11. CEILING TILES INFILLED AT LOCATIONS NOTED AS DEMOLISHED ON WS10179, SHEET 1. WHERE POSSIBLE REUSE SALVAGED TILE. BATTELLE TO SUPPLY ADDITIONAL CEILING TILE TO MATCH EXISTING WHERE NECESSARY.
12. HM FRAMED OPENING AT BASE OF WALL. SEE DETAIL 6 ON SHEET 3 OF THIS DRAWING.
13. RELOCATE METAL STORAGE CABINET FROM NORTH WALL OF LAB 1401 TO EAST WALL OF AIRLOCK 1401A (SEE WS10179, SHEET 1). CONTRACTOR TO SUPPLY NEW 18 GAUGE SHEET METAL FILLER ON NORTH SIDE OF NEW LOCATION TO MATCH ELECTRICAL RACEWAY DEPTH IN BACK OF CABINET. ENAMEL COLOR OF FILLER PIECE TO MATCH CABINET IN COLOR AND SHEEN.
14. RELOCATE SALVAGED INCANDESCENT CAN LIGHTS AND ASSOCIATED ACOUSTICAL CEILING TILE TO THIS LOCATION. SEE WS10179, SHEET 1, FOR PREVIOUS LOCATIONS OF SALVAGED CAN LIGHTS AND CEILING TILE.
15. EXISTING DOUBLE JOISTS
16. EXISTING 16"ø DUCT (2 PLACES)
17. EXISTING W18X40 STEEL BEAMS
18. CORNER GUARD – SEE SPECIFICATION SECTION 102600.
19. INSTALL BLACK-OUT WINDOW FILM ON SINGLE DOOR INTO LAB 1403 AND FOR BOTH EXISTING DOOR LITES ON DOUBLE DOOR INTO LAB 1401 FROM CORRIDOR. SEE SHEET NOTE 18 ON H-3-317135, SHEET 2.
20. EXISTING ROOM SIGN TO REMAIN IN PLACE
21. REINSTALL CHASE AND PANEL SALVAGED FROM CASEWORK SEGMENT DEMOLISHED ON WS10179/SHT 1.
22. NEW WALL WITH 250S137-33 (2 1/2") METAL STUDS (16-INCHES OC.) WITH 5/8" TYPE X GYPSUM BOARD EACH SIDE (PAINTED). SEE DETAIL 4 ON H-3-317135, SHEET 3. ALIGN EAST SIDE OF WALL WITH OUTSIDE OF EXISTING DOOR FRAME.
23. TRANFER GRILLE. SEE MECHANICAL SECTIONS "A" & "B" ON H-3-317137, SHEET 1 (TO BE PAINTED).
24. FOR NOTE ON DOOR DESIGN SEE INTERIOR ELEVATIONS AND SECTIONS ON SHEET 2 OF THIS DRAWING.
25. AT ALL EXISTING SEALANT REMOVAL SPOTS, GYPSUM BOARD WALL SCRAPES, SCRATCHES AND HOLES ETC., SHALL BE PATCHED, REPAIRED AND PRIMED PRIOR TO FINISH COAT APPLICATION ON EXISTING WALLS (TYPICAL).
26. ALIGN SINGLE C10 JOIST AT CENTER OF 2 1/2-INCH STUD WALL HANGING BELOW FOR ATTACHMENT.

DRAWING NO	DRAWING TITLE
H-3-317137	MECH LAB 1401 1ST FLOOR PLAN
H-3-317136	ARCH LAB 1401 EQUIP ARRANGEMENT
H-3-317135	ARCH LAB 1401 FLOOR PLAN
WS10179	DEMOLITION LAB 1401 FLOOR PLAN
H-3-317134	CIVIL LAB 1401 SPECIFICATIONS

REFERENCE DRAWINGS

NEXT USED ON

RR	QA BY / DATE	ENGR BY / DATE	CHK BY / DATE	REV BY / DATE	DESCRIPTION	REV NO

REVISIONS

RELEASE 05-13-13 DATE JMK

EDP # S682648-EDP01

DRAWN KJ COALY/JE SANDBERG	DATE 3/13/13	U. S. DEPARTMENT OF ENERGY PACIFIC NORTHWEST SITE OFFICE
CHECKED SD BURNETT	5/7/13	Pacific Northwest Division — Battelle — Richland, Washington 99352
ENGR KENNETH D LARSON KD LARSON	5/7/13	ARCHITECTURAL LAB 1401 TEM FLOOR PLAN & RCP
APVD GREG TURPEN	8 MAY 13	
OTHER		
OTHER		PROJ TITLE TEM MICROSCOPE INSTALLATION
APVD FOR IMPLEMENTATION BY BRIAN GREENAWAY	5/9/13	SIZE D · INDEX NO 0800 · BLDG NO 3410 · DWG NO H-3-317135 · REV NO 0 · SCALE SHOWN · SHEET 1 OF 3

PNNL-D_R0_10/11

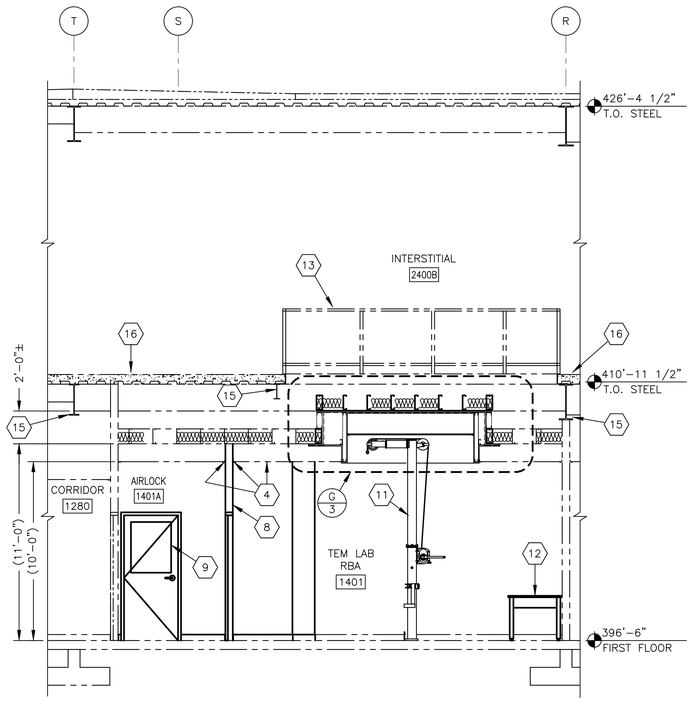

A 1 SECTION
SCALE: 1/4" = 1'-0"

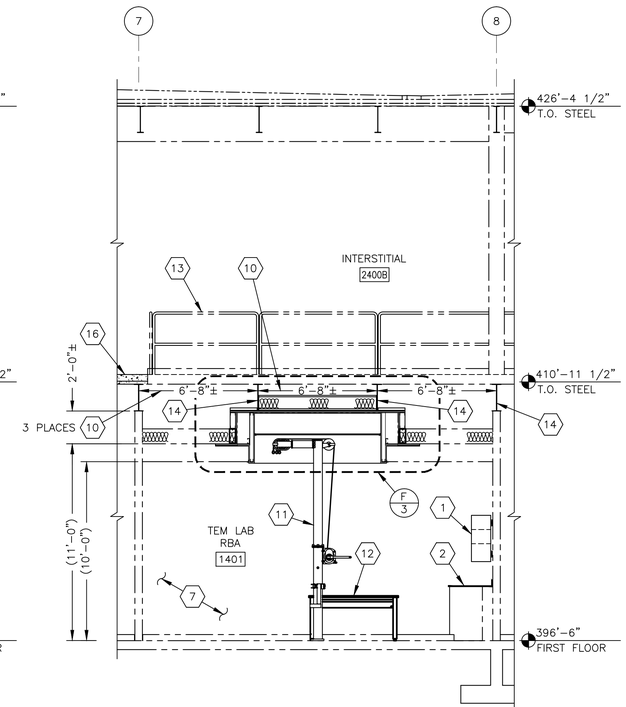

B 1 SECTION
SCALE: 1/4" = 1'-0"

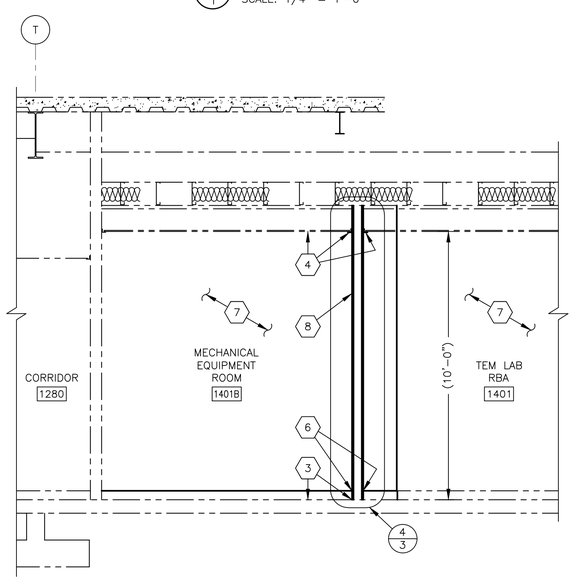

C 1 SECTION
SCALE: 3/8" = 1'-0"

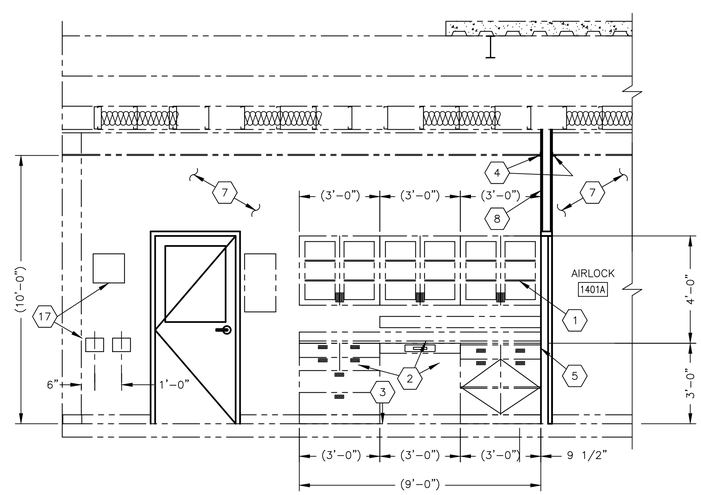

D 1 SECTION/ELEVATION
SCALE: 3/8" = 1'-0"

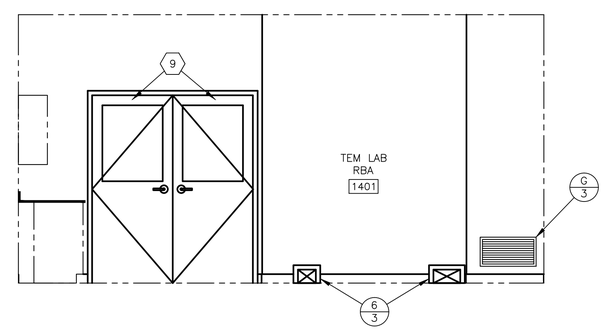

E 1 ELEVATION
SCALE: 3/8" = 1'-0"

SHEET NOTES

1. REPOSITION EXISTING UPPER CABINETS TO THIS LOCATION. PROVIDE METAL "Z" CLEATS FOR MOUNTING OF UPPER CABINETS TO EXISTING METAL STUD WALL. TRIM ENDS AS REQ'D.
2. REPOSITION EXISTING LOWER CABINETS TO THIS LOCATION. REPOSITION EXISTING BLACK EPOXY RESIN COUNTERTOP AND BACKSPLASH TO THIS LOCATION. CUT TO SIZE.
3. EXISTING CONCRETE FLOOR SLAB WITH EMI SHIELDING, UNDERLAYMENT, AND SHEETGOODS FLOORING.
4. EXISTING SUSPENDED ACOUSTICAL TILE CEILING (SATC). MODIFY AS REQUIRED AT NEW CEILING RECESSED AREA AND TO ACCOMMODATE NEW WALLS. SUPPLY NEW PERIMETER WALL ANGLE AT NEW WALL LOCATIONS.
5. STEEL ANGLE SECURED TO WALL STUDS FOR SUPPORT OF RELOCATED BLACK EPOXY COUNTERTOP.
6. SUPPLY NEW RESILIANT BASE IN AIRLOCKS, MECHANICAL EQUIPMENT ROOM AND IN TEM LAB AT NEW WALL LOCATIONS (MATCH TO EXISTING).
7. EXISTING GYPSUM BOARD-FACED METAL STUD WALL (BEYOND).
8. NEW METAL STUD WALL. SEE FLOOR PLAN ON H-3-317135, SHEET 1, FOR WALL MAKE-UP.
9. PAIR OF 3'-0" X 7'-0" X 1 3/4" WOOD DOORS WITH HALF-LITE TO MATCH EXISTING DOOR PAIR LEADING INTO CORRIDOR FROM AIRLOCK 1401A. SINGLE 3'-0" X 7'-0" X 1 3/4" WOOD DOOR WITH HALF-LITE OPENING INTO THE MECHANICAL EQUIPMENT ROOM 1401B SHOULD ALSO MATCH IN CONFIGURATION. ALL GLASS SHALL BE 1/4-INCH TEMPERED.
10. DIMENSION IS CENTER OF EXISTING STEEL BEAM TO CENTER OF EXISTING STEEL BEAM (MAY VARY SLIGHTLY).
11. TEM HOIST (TOP 11'-4" ABOVE FINISHED FLOOR) TO BE SUPPLIED AND INSTALLED BY OTHERS (NIC).
12. TABLE TO BE SUPPLIED BY BATTELLE (NIC).
13. EXISTING STEEL RAILING AROUND OPENING ABOVE LAB 1401 IN THE INTERSTITIAL.
14. W18X40 STEEL BEAM (TYPICAL 4 PLACES ABOVE 1401 LAB).
15. EXISTING STEEL BEAMS TO REMAIN.
16. EXISTING INTERSTITIAL FLOOR SLAB OVER STEEL DECK TO REMAIN IN PLACE.
17. RELOCATE 2 EXISTING GAS BOTTLE WALL BRACKETS FROM SOUTH WALL TO THIS LOCATION ALONG WITH THE GAS BOTTLE MANIFOLD. MOUNT AT SAME HEIGHT AS EXISTING.

RELEASE
05-13-13
DATE
JMK

EDP # S682648-EDP01

DRAWN	DATE
KJ COALY/JE SANDBERG	3/13/13
CHECKED SD BURNETT	5/7/13
ENGR KENNETH D LARSON / KD LARSON	5/7/13
APVD GREG TURPEN	8 MAY 13
OTHER	
OTHER	
APVD FOR IMPLEMENTATION BY BRIAN GREENAWAY	5/9/13

U. S. DEPARTMENT OF ENERGY
PACIFIC NORTHWEST SITE OFFICE

Pacific Northwest Division — Battelle — Richland, Washington 99352

ARCHITECTURAL LAB 1401 TEM SECTIONS & ELEVATIONS

PROJ TITLE: TEM MICROSCOPE INSTALLATION

SIZE	INDEX NO	BLDG NO	DWG NO	REV NO
D	0801	3410	H-3-317135	0

SCALE SHOWN — SHEET 2 OF 3

DRAWING NO	DRAWING TITLE
REFERENCE DRAWINGS	
NEXT USED ON	

RR	QA BY / DATE	ENGR BY / DATE	CHK BY / DATE	REV BY / DATE	DESCRIPTION	REV NO
REVISIONS						

PNNL-D_R0_10/11

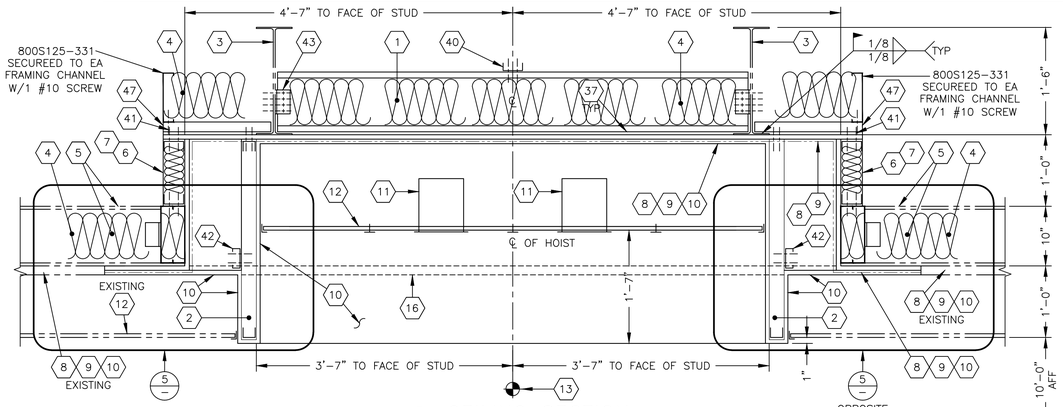

F 1,2 CEILING SECTION
SCALE: 1" = 1'-0"

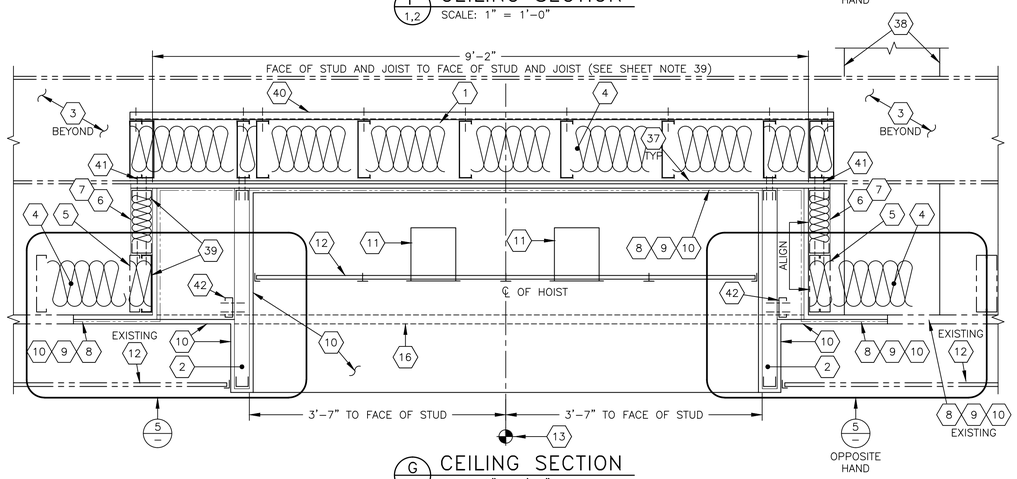

G 1,2 CEILING SECTION
SCALE: 1" = 1'-0"

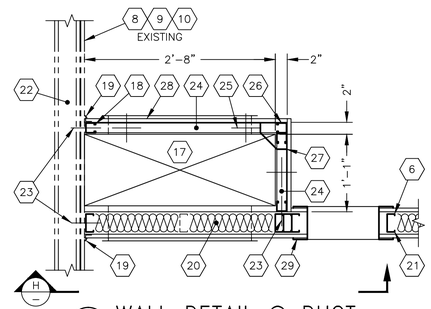

3 1 WALL DETAIL @ DUCT
SCALE: 1" = 1'-0"

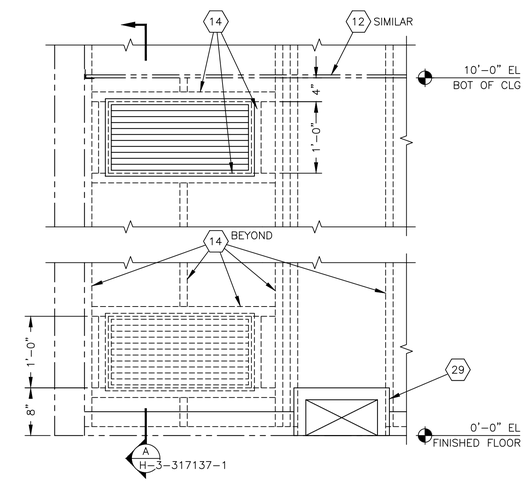

H 2,- WALL ELEVATION @ DUCT
SCALE: 1" = 1'-0"

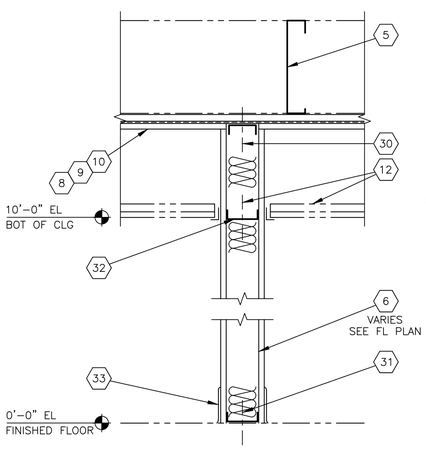

4 2 WALL DETAIL
SCALE: 1 1/2" = 1'-0"

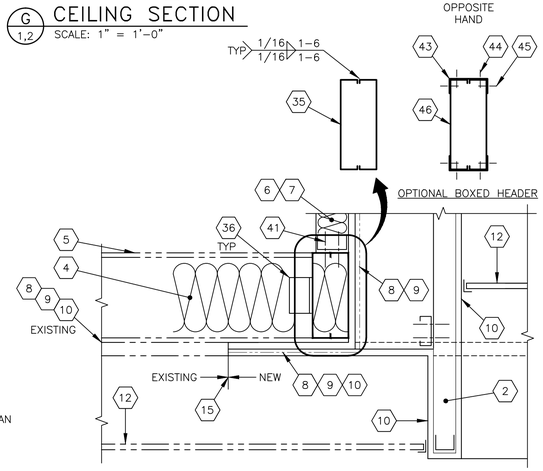

5 - CEILING DETAIL
SCALE: 1 1/2" = 1'-0"

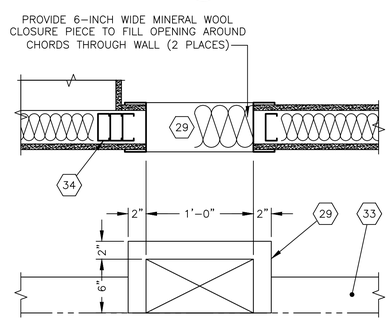

6 2 HM FRAMED OPENING
SCALE: 1 1/2" = 1'-0"

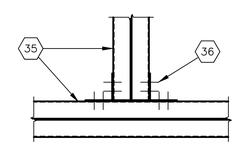

7 1 DETAIL
SCALE: 3" = 1'-0"

SHEET NOTES

1. 10005162-43 STEEL "C" JOISTS AT 16" OC
2. 250S137-33 (2 1/2") METAL STUD FRAMING AT 16" OC SECURE TO BOTTOM OF FRAMING AS NOTED ON DWG.
3. EXISTING W18X40 STEEL BEAMS APPROXIMATELY 6'-8" OC OVER THE TOP OF LAB 1401.
4. R-19 BATT INSULATION WITH R-13 BATT OVER THE TOP (9 1/2" TOTAL THICKNESS – UNFACED). EXISTING BATT INSULATION ALREADY IN PLACE BETWEEN JOISTS SHALL NOT BE REUSED. BATT INSULATION IS NOT REFERENCED IN SPEC.
5. EXISTING 10-INCH DEEP STEEL "C" JOISTS AT APPROXIMATELY 16-INCHES ON CENTER SUPPORTING THE PLYWOOD AND EMI SHIELDING.
6. 362S137-30 (3 5/8") METAL STUD FRAMING AT 16" OC W/ R-19 BATT. SECURE WITH SHEET METAL CLIPS TO EXISTING STEEL BEAM AND TO 10-INCH STEEL JOIST AS SHOWN.
7. R-13 BATT INSULATION (UNFACED) BETWEEN METAL STUDS.
8. 3/4" A-D (EXPOSURE 1) INTERIOR GRADE FIRE TREATED PLYWOOD SECURED TO STEEL JOIST FRAMING WITH #10 FLATHEAD SCREWS AT 8" OC
9. 5 LAYERS OF 0.024-INCH SILICONIZED IRON STEEL SHEETS (M-19 GRADE). SECURE AS REQUIRED TO PLYWOOD SHEETS AROUND ENTIRE RECESSED CEILING AREA. OVERLAP AND OFFSET EACH LAYER AS NECESSARY TO MINIMIZE EMI PENETRATION INTO THE 1401 LAB ENCLOSURE.
10. 5/8-INCH "TYPE X" GYPSUM BOARD SECURED TO PLYWOOD BEHIND EMI SHIELDING. PATCH TO EXISTING WHERE OCCURS. FINISH TO LEVEL SPECIFIED. NO PAINT FINISH REQUIRED ABOVE SUSPENDED CEILING.
11. REUSE SALVAGED CAN LIGHTS AT THIS LOCATION. SEE ELECTRICAL DRAWINGS.
12. SUSPENDED ACOUSTICAL CEILING. SALVAGE EXISTING CEILING TILES AND REUSE WHERE POSSIBLE. BATTELLE TO SUPPLY NEW CEILING TILES TO MATCH EXISTING WHERE NECESSARY. CONTRACTOR SHALL SUPPLY ALL METAL CEILING SUSPENSION SYSTEM COMPONENTS TO MATCH EXISTING AS REQUIRED.
13. CENTER OF MICROSCOPE HOIST DIAMETER. SEE FLOOR PLAN ON H-3-317136 FOR LOCATION.
14. DASHED LINES REPRESENT METAL STUD FRAMING AND STEEL STRUT FRAMING BEYOND AT MECHANICAL RETURN AIR DUCT GRILLE LOCATIONS. SEE MECHANICAL.
15. GENERAL CONTRACTOR TO WORK WITH EMF SHIELDING CONTRACTOR TO DETERMINE BEST LOCATION FOR DEMOLISHING THE EXISTING FRAMING AND SHIELDING SYSTEM.
16. DASHED LINES REPRESENT EXISTING PLYWOOD, EMI SHIELDING, AND GYPSUM BOARD BEYOND.
17. 2'-8" X 1'-0" SHEET METAL RETURN AIR (RA) DUCT (SEE MECHANICAL).
18. 1 5/8-INCH STEEL FRAMING CHANNEL SYSTEM (SIMILAR TO UNISTRUT) AROUND RA DUCT AT LOCATIONS NOTED EXTEND FROM FLOOR TO FRAMING APPROXIMATELY 12" ABOVE 10'-0" CEILING.
19. METAL TRIM BEAD AND SEALANT AT CORNERS WHERE EXISTING WALL AND NEW WALL MEET (TYPICAL).
20. SOUND INSULATION IN METAL STUD WALL AROUND MECHANICAL EQUIPMENT ROOM (NORTH AND EAST WALLS ONLY).
21. FOR WALL TYPE SEE NOTES ON FLOOR PLAN (H-3-317135, SHEET 1).
22. EXISTING METAL STUD WALL AROUND LAB 1401 PERIMETER.
23. 3/16"ø HILTI TOGGLER ANCHOR AND SCREW @ 2'-0" OC, TYPICAL.
24. HORIZONTAL 1 5/8" FRAMING CHANNEL WITH END CONNECTORS TO UPRIGHT MEMBERS @ 2'-0" OC VERTICALLY FOR GYPSUM BOARD SUPPORT, TYPICAL.
25. ANCHOR LOWER FRAMING CHANNEL TO FLOOR WITH 3/8"ø X 1 5/8" EMBEDMENT HILTI KWIK BOLT 3 ANCHORS, TYPICAL 3 LOCATIONS AS SHOWN.
26. DOUBLE OFFSET OPENING FRAMING CHANNEL AS SHOWN OR TWO SINGLE FRAMING CHANNELS SECURED TOGETHER AS SHOWN WITH #10 SCREWS @ 8" OC
27. PROVIDE FLAT GUSSET PLATE SECURED TO FRAMING CHANNELS TO STIFFEN UPPER CORNER OF CHASE.
28. 5/8" GYPSUM WALLBOARD, TYPE "X", TYPICAL.
29. WALL OPENING WITH 18 GAUGE HOLLOW METAL FRAME, SEE DETAIL 6 ON THIS SHEET. MINERAL WOOL OPNG CLOSURE.
30. #8 SCREW @ 16" OC
31. POWDER DRIVEN FASTENER @ 16" OC
32. BLOCKING
33. 4" RESILIENT BASE (BOTH SIDES). SEE SPECIFICATION SECTION 096500.
34. TRIPLE STUD @ DUCT
35. 100S200-43 BOXED JOIST (TYPICAL)
36. MC750-68 CLIP WITH 7-#10 SELF DRILLING SCREWS PER LEG (TYPICAL)
37. 1/2" THICK INTERIOR FIRE-TREATED PLYWD SHEATHING TO ACT AS SHIM UNDER STEEL JOISTS. SEE SPEC 060500.
38. MECHANICAL SUPPLY AIR DUCT BEYOND.
39. SOUTH FACE OF EXISTING 10-INCH DOUBLE "C" JOIST AT THIS LOCATION TO ALIGN WITH STUD FACE. SIMILAR CONDITION ON OPPOSITE SIDE (9'-2" SOUTH) WILL REQUIRE AN ADDED "C" JOIST MOD AND A CHECK OF FIELD CONDITIONS TO SEE HOW STUDS ABOVE THE JOISTS CAN BE ALIGNED WITH NORTH FACE OF JOISTS.
40. 362S125-30 BRIDGING @ CENTER
41. 2 #10 SELF DRILLING SCREWS @ 16" OC (TYPICAL)
42. 250S137-33 (2 1/2") METAL STUD FRAMING ALL AROUND WITH SCREWS AS CALLED FOR UNDER SHEET NOTE 41 ABOVE.
43. 400T150-43 (TYPICAL)
44. 2 #10 SELF DRILLING SCREWS @ 16" OC STAGGER WITH SIDE SCREW PATERN (TYPICAL @ BOTTOM)
45. 2 #10 SELF DRILLING SCREWS @ 16" OC STAGGER WITH TOP-BOTTOM SCREW PATTERN (TYPICAL).
46. 1000S200-43 (TYPICAL 2)
47. 1 5/8" FRAMING CHANNEL (16" OC)

RELEASE 05-13-13 DATE JMK

EDP # S682648-EDP01

DRAWN	KJ COALY/JE SANDBERG	3/13/13
CHECKED	SD BURNETT	5/7/13
ENGR	KENNETH D LARSON / KD LARSON	5/7/13
APVD	GREG TURPEN	8 MAY 13
OTHER		
OTHER		
APVD FOR IMPLEMENTATION BY	BRIAN GREENAWAY	5/9/13

U. S. DEPARTMENT OF ENERGY
PACIFIC NORTHWEST SITE OFFICE

Pacific Northwest Division — Battelle — Richland, Washington 99352

ARCHITECTURAL LAB 1401 TEM DETAILS

PROJ TITLE: TEM MICROSCOPE INSTALLATION

SIZE	INDEX NO	BLDG NO	DWG NO	REV NO
D	0801	3410	H-3-317135	0

SCALE SHOWN — SHEET 3 OF 3

DRAWING NO	DRAWING TITLE
REFERENCE DRAWINGS	
NEXT USED ON	

RR	QA BY / DATE	ENGR BY / DATE	CHK BY / DATE	REV BY / DATE	DESCRIPTION	REV NO
REVISIONS						

PNNL-D_R0_10/11

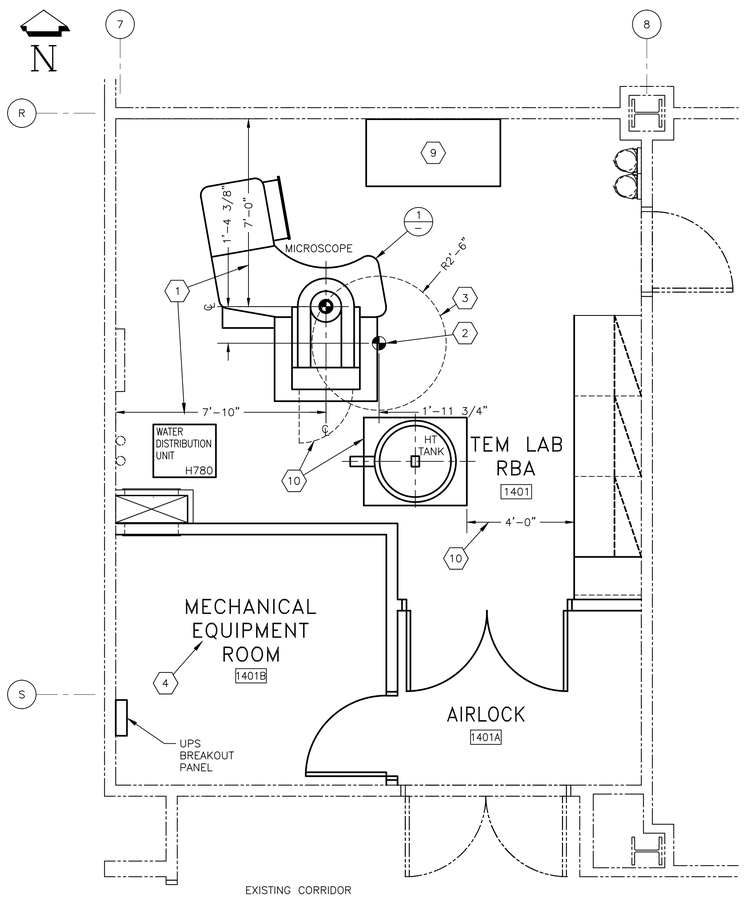

FLOOR PLAN (AREA 1a)

SCALE: 3/8" = 1'-0"

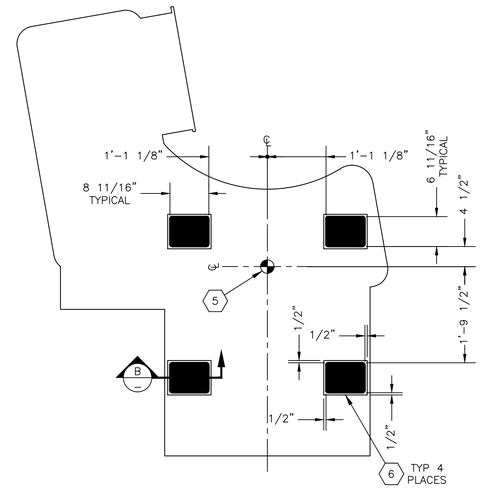

1 MICROSCOPE SUPPORT DETAIL

SCALE: 3/4" = 1'-0"

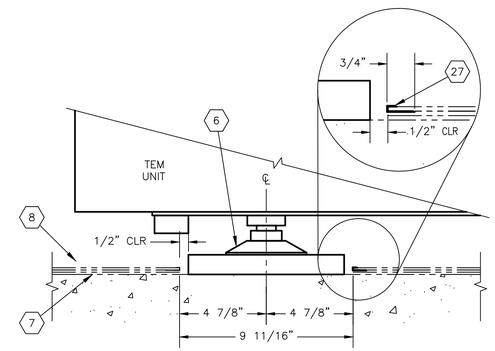

B MICROSCOPE FOOT DETAIL

SCALE: 3" = 1'-0"

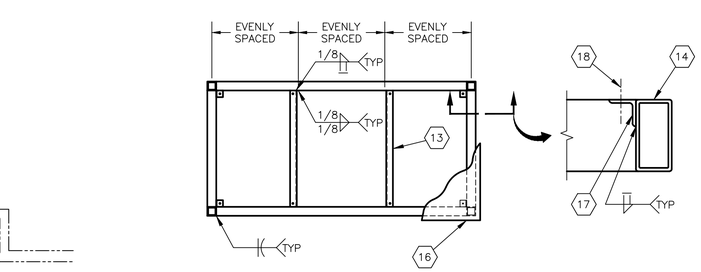

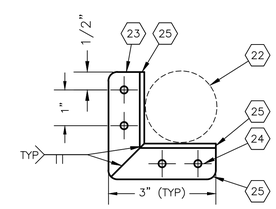

3 PUMP SNUBBER DETAIL

SCALE: 6" = 1'-0" (4 REQUIRED – VENDOR TO LOCATE)

(TYPICAL 2 PER PUMP MOUNTED DIAGONALLY)

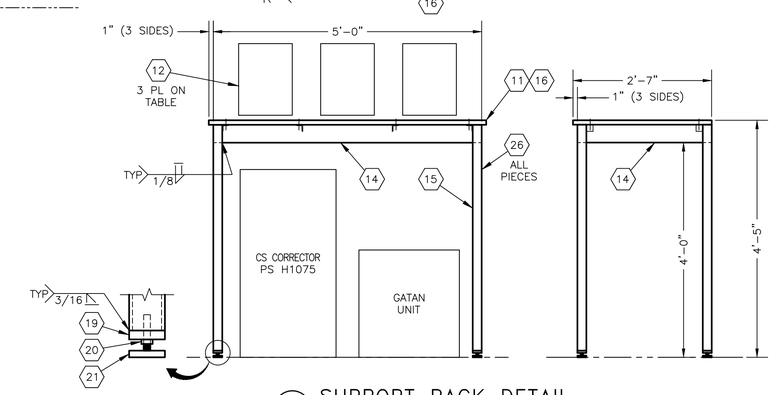

A SUPPORT RACK DETAIL

SCALE: 3/4" = 1'-0"

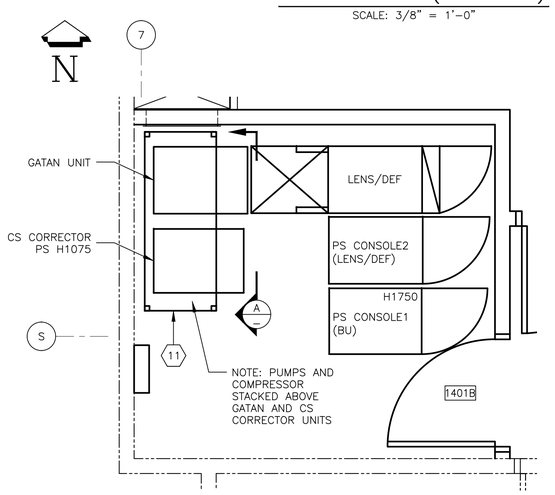

PLAN – EQUIPMENT ROOM

SCALE: 1/2" = 1'-0"

GENERAL NOTES

(UNLESS OTHERWISE SPECIFIED)

1. SEE H-3-317134, SHEET 1 FOR LEGEND CONTAINING TYPICAL SYMBOLS AND ABBREVIATIONS.

SHEET NOTES

1. DIMENSION FROM CENTERLINE OF MICROSCOPE COLUMN TO FACE OF WALL
2. CENTER OF RADIUS FOR MICROSCOPE HOIST IN CEILING ABOVE
3. OUTSIDE RADIUS OF MICROSCOPE HOIST AT RECESS IN CEILING ABOVE. SEE REFLECTED CEILING PLAN AND DETAILS 1 AND 2 ON H-3-317135 SHEET 3.
4. FOR EQUIPMENT LAYOUT IN MECHANICAL EQUIPMENT ROOM SEE "PLAN – EQUIPMENT ROOM" AT THE BOTTOM LEFT ON THIS SHEET.
5. CENTER OF MICROSCOPE COLUMN AS SHOWN ON THE FLOOR PLAN AT LEFT.
6. THE JOEL JEM-ARM200CF TEM RESTS ON FOUR "DAMPER FEET". THE FLOOR BENEATH ALL FOUR FEET SHALL BE REMOVED DOWN TO TOP OF THE EXISTING CONCRETE SLAB. THIS WILL REQUIRE THE REMOVAL OF THE SHEET FLOORING, THE CEMENT-BASED UNDERLAYMENT BELOW IT AND THE SILICON IRON STEEL SHIELDING (5 LAYERS OF 0.024-INCH STEEL SHEETS FOR AN OVERALL THICKNESS OF APPROXIMATELY 1/8-INCH). THE REMOVED AREA SHALL EXTEND 1/2" BEYOND THE DAMPER FOOT IN ALL DIRECTIONS AS SHOWN ON THE DRAWING (TYPICAL 4 PLACES).
7. SHIELDING LAYERS ON TOP OF CONCRETE SLAB AS NOTED IN SHEET NOTE 6 DIRECTLY ABOVE.
8. SHEET FLOORING OVER CEMENT-BASED UNDERLAYMENT.
9. NEW FREESTANDING TABLE SUPPLIED BY BATTELLE (NIC).
10. VENDOR TO COORDINATE DISTANCE BETWEEN MICROSCOPE MAINTENANCE ACCESS DOOR WITH RESPECT TO HT TANK DISTANCE REQUIRED FROM THE DOOR. THIS IS NOT AN ISSUE FOR THE GENERAL CONTRACTOR (NIC).
11. SUPPORT RACK (TABLE).
12. PUMPS AND COMPRESSORS, SEE DETAIL 3 FOR PUMP SNUBBER DETAIL.
13. ∠1 1/2" X 1 1/2 X 3/16 X 2'-2"M.
14. HSS 2 X 4 X 3/16 (TYPICAL 4 LOC – LENGTHS VARY).
15. HSS 2 X 2 X 3/16 (TYPICAL 4).
16. 1" THICK BLACK EPOXY RESIN CHEM TOP: 2'-7" X 5'-2".
17. ∠1 1/2" X 1 1/2 X 3/16 X 1 1/2".
18. #12 X 1" SCREW INTO CHEM TOP (TYPICAL 8)
19. 1/2" x 2" x 2" PLATE – DRILL AND TAP 3/8"-16 HOLE @ CENTER.
20. 3/8 – 16 NUT.
21. S & W GLIDE RITE 3/8 – 16 STEEL LEVELING MOUNT (250# LOAD RATED), GRAINGER #4TPY6 (TYPICAL 4).
22. PUMP FOOT.
23. ∠1 X 1 X 1/8.
24. #12 X 1" SCREWS (TYPICAL 4).
25. 1/4" RADIUS @ ALL CORNERS.
26. PAINT ALL TABLE SURFACES, INCLUDING SNUBBER ANGLES) IN SHOP WITH ENAMEL PAINT (COLOR: CHAMELEON TO MATCH EXISTING CABINETS). DO NOT PAINT TOP.
27. SHEET VINYL MOLDING TO BE PLACED AROUND PERIMETER OF CUT-OUT IN EXISTING SHEETGOODS FLOORING AT LOCATION OF TEM DAMPER FEET (TYPICAL 4 PLACES). SEE SPECIFICATION SECTION 096500/D.

RELEASE 05-13-13 DATE JMK

EDP # S682648-EDP01

DRAWING NO	DRAWING TITLE
H-3-317135	ARCH LAB 1401 FLOOR PLAN
H-3-317134	CIVIL LAB 1401 SPECIFICATIONS

REFERENCE DRAWINGS

NEXT USED ON

RR	QA BY / DATE	ENGR BY / DATE	CHK BY / DATE	REV BY / DATE	DESCRIPTION	REV NO

REVISIONS

		DATE
DRAWN	KJ COALY	3/13/13
CHECKED	SD BURNETT	5/7/13
ENGR	KENNETH D LARSON / KD LARSON	5/7/13
APVD	GREG TURPEN	8 MAY 13
OTHER		
OTHER		
APVD FOR IMPLEMENTATION BY	BRIAN GREENAWAY	5/9/13

U. S. DEPARTMENT OF ENERGY
PACIFIC NORTHWEST SITE OFFICE

Pacific Northwest Division — Battelle — Richland, Washington 99352

ARCHITECTURAL LAB 1401 TEM EQUIPMENT ARRANGEMENT

PROJ TITLE: TEM MICROSCOPE INSTALLATION

SIZE	INDEX NO	BLDG NO	DWG NO	REV NO
D	0800 / 0801 / 0804	3410	H-3-317136	0

SCALE SHOWN — SHEET 1 OF 1

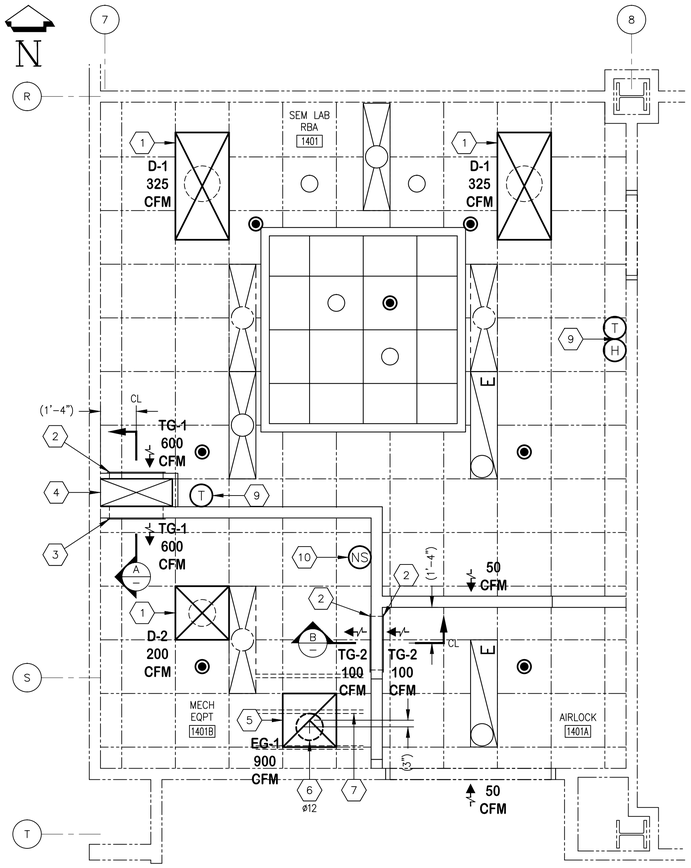

1ST FLOOR PLAN – MECH PLAN

SCALE: 3/8" = 1'-0"

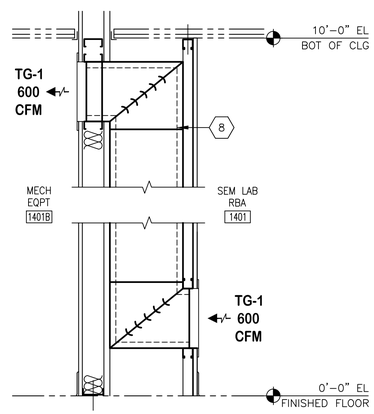

A SECT @ TRANSFER DUCT

SCALE: 1" = 1'-0"

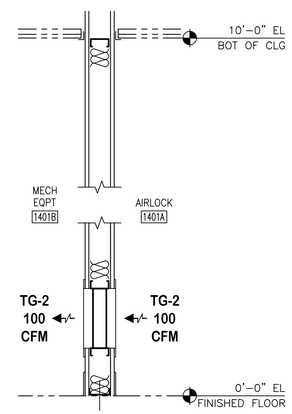

B SECT @ TRANSFER DUCT

SCALE: 1" = 1'-0"

SHEET NOTES

1. PROVIDE SUPPLY DIFFUSERS IN LOCATION SHOWN AND RECONNECT EXISTING FLEX AND/OR DUCT IN CEILING SPACE.
2. MOUNT BOTTOM OF TRANSFER GRILL 8" AFF.
3. MOUNT TOP OF TRANSFER GRILL 4" BELOW SATC.
4. 12x32 TRANSFER DUCT WITH 1" DUCT LINER. FOR ADDITIONAL INFO SEE ARCHITECTURAL H-3-317135 SHEET 3, DETAIL 3.
5. REUSE EXISTING EXHAUST GRILL IN NEW LOCATION SHOWN AND RECONNECT EXISTING FLEX DUCT IN CEILING SPACE AS REQUIRED.
6. PROVIDE OPENING IN SHIELDED CEILING WHERE NEW DUCT PENETRATION OCCURRED, 1 PL. PENETRATION AND DIFFUSER CENTER OFFSET BY APPROXIMATELY 3" DUE TO CEILING JOIST. SEE SPECIFICATIONS AND ARCHITECTURAL H-3-317135 FOR INFORMATION.
7. APPROXIMATE LOCATION OF METAL CEILING JOISTS ABOVE CEILING @ 16" O.C, NEW PENETRATION TO DROP BETWEEN CEILING JOIST AS SHOWN, CONTACT BATTELLE CONSTRUCTION MANAGER IF ACTUAL ALIGNMENT DIFFERS MORE THAN FLEX DUCT WILL ALLOW FOR OFFSET.
8. 1" DUCT LINER.
9. PROVIDE TEMPERATURE AND HUMIDITY SENSORS. SEE H-3-317137 SHEET 4 FOR PART NUMBERS.
10. PROVIDE NETWORK TEMPERATURE SENSOR. USED FOR MONITOR ONLY. SEE H-3-317137 SHEET 4 FOR PART NUMBERS.

GENERAL NOTES

(UNLESS OTHERWISE SPECIFIED)

1. SEE H-3-317134, SHEET 1 FOR LEGEND CONTAINING TYPICAL SYMBOLS AND ABBREVIATIONS.
2. DIMENSIONS ARE IN FEET AND INCHES UNLESS OTHERWISE SPECIFIED.
3. FIELD VERIFY DIMENSIONS AND REPORT DISCREPANCIES WITH FIELD CONDITIONS TO BATTELLE CONSTRUCTION MANAGER PRIOR TO ANY CONSTRUCTION.
4. WORK SHALL BE COORDINATED WITH THE BATTELLE CONSTRUCTION MANAGER.
5. SURFACES DAMAGED DURING CONSTRUCTION SHALL BE REPAIRED TO MATCH CONDITION OF EXISTING.
6. ADDITIONAL ABBREVIATIONS USED ARE IN ACCORDANCE WITH ASME Y14.38-1999.

RELEASE
05-13-13
DATE
JMK

EDP # S682648-EDP01

DRAWING NO	DRAWING TITLE
H-3-317137	MECH LAB 1401 TEM 1ST FL PIPING
H-3-317135	ARCH LAB 1401 TEM FL PLAN & RCP
H-3-317134	CIVIL LAB 1401 TEM DWG LIST/SPECS

REFERENCE DRAWINGS

NEXT USED ON

RR	QA BY / DATE	ENGR BY / DATE	CHK BY / DATE	REV BY / DATE	DESCRIPTION	REV NO

REVISIONS

DRAWN KS KOSCHIK	DATE 3/5/13	
CHECKED SD BURNETT	5/7/13	
ENGR DAVE CREVIER D CREVIER	5/8/13	
APVD DARRELL DESMET	5/9/13	
OTHER		
OTHER		
APVD FOR IMPLEMENTATION BY BRIAN GREENAWAY	5/9/13	

U. S. DEPARTMENT OF ENERGY
PACIFIC NORTHWEST SITE OFFICE

Pacific Northwest Division — Battelle — Richland, Washington 99352

MECHANICAL
LAB 1401 TEM
1ST FLOOR PLAN

PROJ TITLE: TEM MICROSCOPE INSTALLATION

SIZE	INDEX NO	BLDG NO	DWG NO	REV NO
D	8900	3410	H-3-317137	0

SCALE SHOWN — SHEET 1 OF 4

PNNL-D_R0_10/11

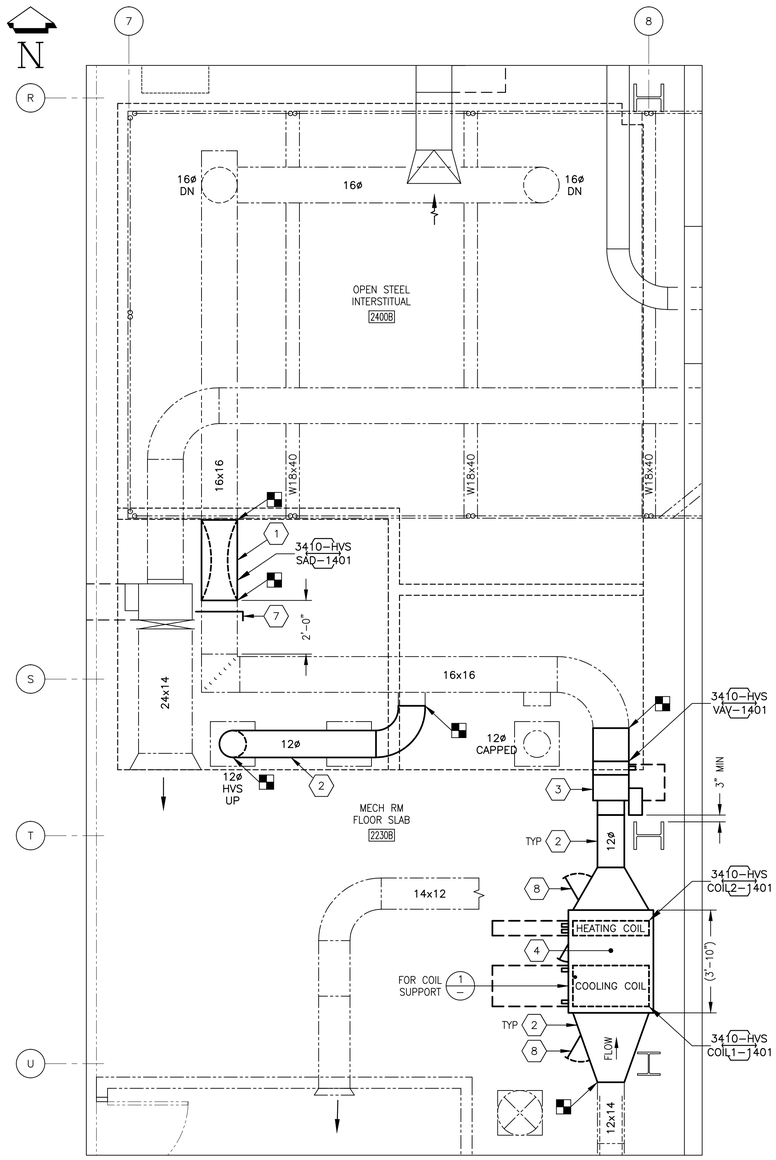

2ND FLOOR PLAN – MECH SUPPLY

SCALE: 3/8" = 1'-0"

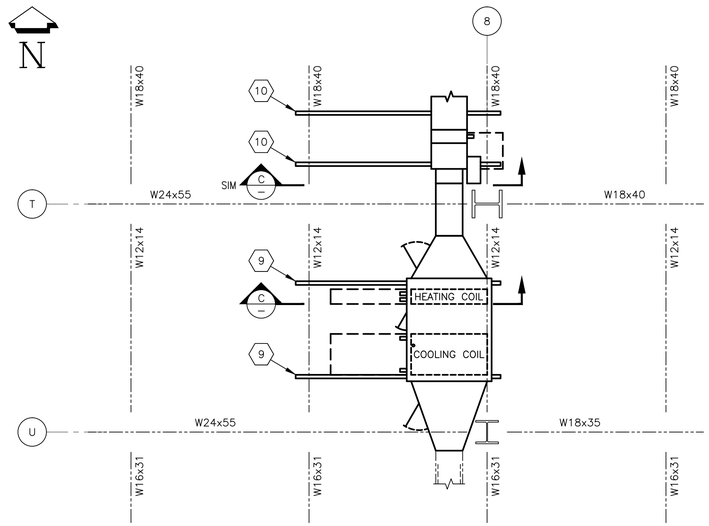

1 DETAIL @ COIL SUPPORT (STRL ABOVE)

SCALE: 3/8" = 1'-0"

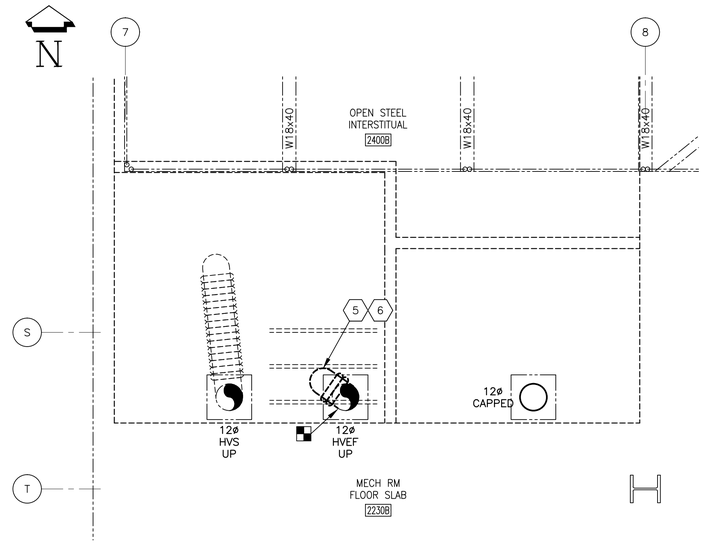

2ND FLOOR PLAN – MECH EXHAUST (BELOW SLAB)

SCALE: 3/8" = 1'-0"

SHEET NOTES

1. RELOCATE SOUND ATTENUATOR TO LOCATION SHOWN.
2. PROVIDE DUCT AND TRANSITIONS, INSULATE ALL SUPPLY DUCT.
3. PROVIDE 3410-HVS-VAV-1401 IN LOCATION SHOWN.
4. PROVIDE COIL PACKAGE IN LOCATION SHOWN.
5. RECONNECT EXISTING FLEX DUCT AT EXHAUST PENETRATION LOCATION. PENETRATION AND DIFFUSER CENTER OFFSET BY APPROXIMATELY 3" DUE TO CEILING JOIST.
6. PROVIDE OPENING IN SHIELDED CEILING WHERE DUCT PENETRATION OCCURS, 1 PL. SEE SPECIFICATIONS AND ARCHITECTURAL H-3-317135 FOR INFORMATION.
7. PROVIDE BALANCING DAMPER.
8. 12x12 ACCESS PANEL. ACUDOR MODEL HD-5070-F OR APPROVED EQUAL.
9. 1 5/8" DOUBLE FRAMING CHANNEL ATTACHED TO BOTTOM OF EXISTING STRUCTURAL BEAMS.
10. 1 5/8" SINGLE FRAMING CHANNEL ATTACHED TO BOTTOM OF EXISTING STRUCTURAL BEAMS.
11. 1-5/8" FRAMING CHANNEL BEAM CLAMP AND NUT/BOLT (TYP 2).
12. TRAPEZE SUPPORT, 3/8" ASTM A36 OR A307 THREADED ROD, 3/8" NUT AND WASHERS WITH DOUBLE NUT ON BOTTOM.

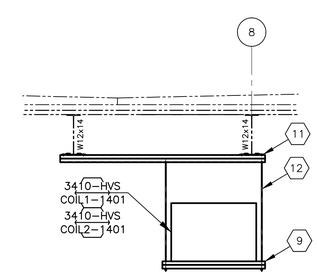

C SECT @ COIL SUPPORT

SCALE: 3/8" = 1'-0"

RELEASE
05-13-13
DATE
JMK

EDP # S682648-EDP01

DRAWN	DATE
KS KOSCHIK	3/5/13
CHECKED SD BURNETT	5/7/13
ENGR DAVE CREVIER D CREVIER	5/8/13
APVD DARRELL DESMET	5/9/13
OTHER	
OTHER	
APVD FOR IMPLEMENTATION BY BRIAN GREENAWAY	5/9/13

U. S. DEPARTMENT OF ENERGY
PACIFIC NORTHWEST SITE OFFICE

Pacific Northwest Division — Battelle — Richland, Washington 99352

MECHANICAL LAB 1401 TEM 2ND FLOOR SUPPLY/EXHAUST PLANS

PROJ TITLE: TEM MICROSCOPE INSTALLATION

SIZE	INDEX NO	BLDG NO	DWG NO	REV NO
D	8900	3410	H-3-317137	0

SCALE SHOWN — SHEET 2 OF 4

DRAWING NO	DRAWING TITLE
REFERENCE DRAWINGS	
NEXT USED ON	

RR	QA BY / DATE	ENGR BY / DATE	CHK BY / DATE	REV BY / DATE	DESCRIPTION	REV NO
REVISIONS						

PNNL-D_R0_10/11

COIL PACKAGE SCHEDULE

UNIT				CHILLED WATER COIL (3410-HVS-COIL1-1401)														HOT WATER COIL (3410-HVS-COIL2-1401)										
EQUIPMENT IDENTIFICATION NUMBER	MANUFACTURER & MODEL NO	LENGTH (IN)	WEIGHT (LB)	SENSIBLE CAPACITY (BTU/HR)	TOTAL CAPACITY (BTU/HR)	EAT-DB °F	EAT-WB °F	LAT-DB °F	LAT-WB °F	F.V. (FT/MIN)	A.P.D. (INH2O)	EWT °F	LWT °F	FLOW RATE (GPM)	W.P.D. (FTH2O)	ROWS	FPI	TOTAL CAPACITY (BTU/HR)	EAT-DB °F	LAT-DB °F	F.V. (FT/MIN)	A.P.D. (INH2O)	EWT °F	LWT °F	FLOW RATE (GPM)	W.P.D. (FTH2O)	ROWS	FPI
3410-HVS-COIL1-1401 3410-HVS-COIL2-1401	DAIKIN McQUAY CAC003GBAC	46.0	563.0	14611.0	34371.0	62.0	61.0	47.2	47.0	288.0	0.3	45.0	55.0	7.0	4.6	12.0	12.0	33297.0	47.0	80.8	288.0	0.2	100.0	79.5	4.0	0.3	3.0	10.0

1) PROVIDE LITTLE GIANT, MODEL VCC-20 SERIES CONDENSATE PUMP (INSTALL PER MANUFACTURER'S WRITTEN INSTRUCTIONS).
2) PROVIDE HIGH LEVEL DRAIN PAN ALARM (DRY CONTACT).

HYDRONIC CONTROL VALVE SCHEDULE

EQUIPMENT IDENTIFICATION NUMBER	VALVE TYPE	EQUIPMENT SERVED	FLUID	FLOW (GPM)	ACTUATOR TYPE	NOTES
3410-1401-SRV-2	3-WAY GLOBE VALVE	HEATING COIL	WATER	3.5	ELECTRIC	1, 2, 3
3410-1401-SRV-1	3-WAY GLOBE VALVE	COOLING COIL	WATER	7.0	ELECTRIC	1, 2, 3

1) VALVES SHALL BE BELIMO, SEIMENS OR APPROVED EQUAL.
2) SIZE VALVES WITH A MINIMUM OF 5 PSI.
3) ACTUATOR SHALL BE NON-SPRING RETURN.

VARIABLE AIR VOLUME UNIT SCHEDULE

EQUIPMENT IDENTIFICATION NUMBER	MANUFACTURER & MODEL NO	INLET SIZE (IN)	CFM		AIR TEMP (°F)		HEATING COIL						FEATURES
			MAXIMUM	MINIMUM	INLET	OUTLET	TOTAL HEATING (MBH)	WATER TEMP (°F)		FLOW (GPM)	TOTAL STATIC PRESSURE DROPS		
								EWT	LWT		AIR (IN WG)	WATER (FT WG)	
3410-HVS-VAV-1401	JOHNSON CONTROLS TSS SINGLE DUCT	12"	850	850	NA	NA	NA	NA	NA	NA	NA	NA	1, 2

1) FACTORY MOUNTED JCI DDC CONTROLS.
2) PROVIDE WITH 3/4" FOIL FACED SCRIM BACKED INSULATION.

PUMP SCHEDULE

EQUIPMENT IDENTIFICATION NUMBER	MANUFACTURER & MODEL NO	SERVICE	TYPE	FLOW (GPM)	TOTAL HEAD (FT WC)	MOTOR				NOTES
						WATTS	VOLTS	PH	HZ	
3410-PMP-1401-1	ARMSTRONG ASTRO 280	CHWS WATER	CIRCULATOR	6.9	20	218	120	1	60	1)
3410-PMP-1401-2	ARMSTRONG ASTRO 280	HHWS WATER	CIRCULATOR	3.2	10	218	120	1	60	1)

1) PROVIDE WITH COMPANION FLANGE KIT

GRILLES AND DIFFUSERS SCHEDULE

ITEM	MANUFACTURER & MODEL NO	CFM	TYPE	MODULE SIZE (IN X IN)	NECK SIZE (IN X IN)	MAX SP (IN WC)	MAX NC LEVEL	NOTES
TG-1	KRUEGER 5600	600	TRANSFER GRILLE	32X22	N/A	0.015	20	WALL MOUNTED ALUMINUM
TG-2	KRUEGER 5600	100	TRANSFER GRILLE	14X10	N/A	0.015	21	WALL MOUNTED ALUMINUM
D-1	LABSOX D-FUSER	300	ALL FABRIC	24X48	16ø	0.05	--	24X48 LAY-IN PANEL
D-2	KRUEGER 5SHPCR	200	LOUVERED DIFFUSER	9X9	12ø	0.1	20	24X24 LAY-IN PANEL ALUMINUM

AUTOMATIC FLOW CONTROL VALVE SCHEDULE

EQUIPMENT IDENTIFICATION NUMBER	MANUFACTURER & MODEL NO	UNIT SERVED	FLOW SETTING (GPM)	SPRING RANGE (PSI)	LINE SIZE (IN)	NOTES
HHWR-FCV-1401-2	HAYS 2510	HEATING COIL	4	2-80	3/4"	PROVIDE WITH PRESSURE TAPS, EXTENDED P&T PORTS AND STAINLESS STEEL TAG-CHAIN
CHWR-FCV-1401-1	HAYS 2510	COOLING COIL	7	2-80	1"	

DRAWING NO	DRAWING TITLE
REFERENCE DRAWINGS	
NEXT USED ON	

RR	QA BY / DATE	ENGR BY / DATE	CHK BY / DATE	REV BY / DATE	DESCRIPTION	REV NO
REVISIONS						

RELEASE
05-13-13
DATE
JMK

EDP # S682648-EDP01

DRAWN KS KOSCHIK	DATE 3/5/13	U. S. DEPARTMENT OF ENERGY PACIFIC NORTHWEST SITE OFFICE
CHECKED SD BURNETT	5/7/13	Pacific Northwest Division — Battelle — Richland, Washington 99352
ENGR D CREVIER / DAVE CREVIER	5/8/13	MECHANICAL LAB 1401 TEM SCHEDULES & DETAILS
APVD DARRELL DESMET	5/9/13	
OTHER		
OTHER		PROJ TITLE TEM MICROSCOPE INSTALLATION
APVD FOR IMPLEMENTATION BY BRIAN GREENAWAY	5/9/13	SIZE D · INDEX NO 8900 · BLDG NO 3410 · DWG NO H-3-317137 · REV NO 0 · SCALE NONE · SHEET 3 OF 4

PNNL-D_RO_10/11

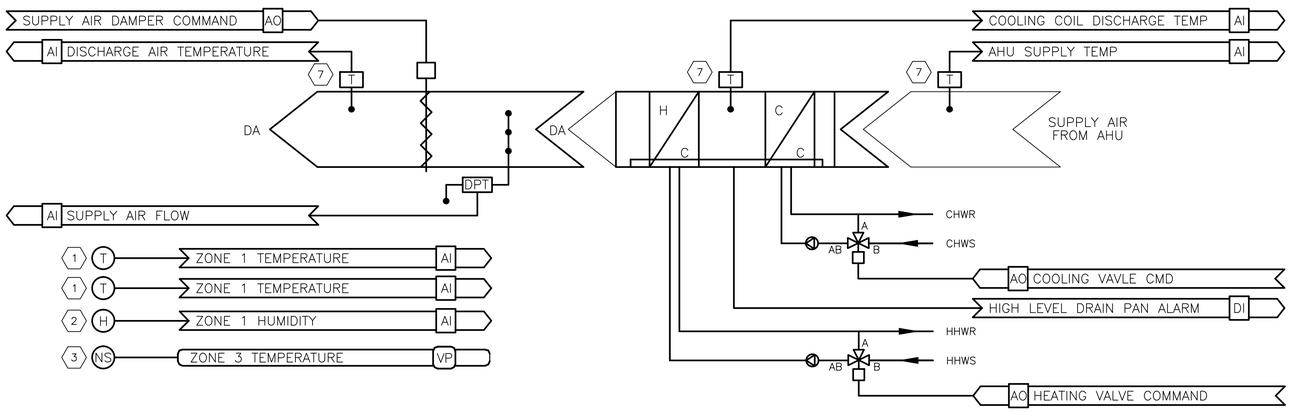

6 3410-HVS-VAV-1401 FLOW SCHEMATIC

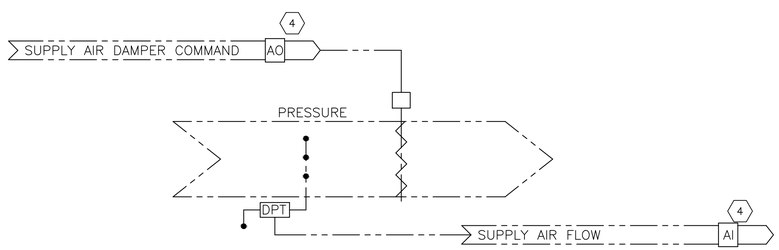

5 6 3410-HVEF-VAV-1401 FLOW SCHEMATIC

8 SEQUENCE OF OPERATIONS

TEMPERATURE SETPOINTS

1. GENERAL

1.1. THE SYSTEM SHALL BE TUNED TO THE FOLLOWING PARAMETERS.
1.1.1. SPACE TEMPERATURE STABILITY: 0.36°F/HR ; 0.09°/MIN
1.1.2. SPACE HUMIDITY STABILITY: NOT TO EXCEED 55%
1.2. TRENDS WILL BE SETUP ON A 30 SEC INTERVAL FOR DISCHARGE AIR TEMPERATURE, SA FLOW, AND SPACE TEMPERATURE DURING TUNING AND FOR A MINIMUM OF 3 MONTHS AFTER TUNING IS COMPLETE.

2. AIR FLOW CONTROL

2.1. UPON STARTUP MODULATE THE SUPPLY AND EXHAUST AIR DAMPERS TO MAINTAIN THE DESIGN AIR FLOWS. AIRFLOW STATIONS WILL BE USED TO MEASURE AIRFLOW.

3. TEMPERATURE CONTROL

SETPOINTS:

3.1. THE ROOM TEMPERATURE SETPOINT SHALL BE SET FOR 65°F (ADJUSTABLE) +/- 0.10°F (ADJUSTABLE). THE DISCHARGE AIR TEMPERATURE FROM THE COOLING COIL SHALL BE SET TO 60°F (ADJUSTABLE), THE STARTING DISCHARGE AIR TEMPERATURE WILL BE 60°F (ADJUSTABLE) AND WILL RESET BASED ON ROOM CONDITIONS.

COOLING MODE:

3.2. IF THE ZONE TEMPERATURE RISES ABOVE THE COOLING SETPOINT BY MORE THAN 0.1°F (ADJUSTABLE) AND THE HEATING VALVE IS FULLY CLOSED RESET THE DISCHARGE AIR TEMPERATURE BY 1°F (ADJUSTABLE) BELOW ITS CURRENT SET POINT, MODULATE THE COOLING COIL CONTROL VALVE AS REQUIRED. SHOULD THE ROOM TEMPERATURE REMAIN ABOVE SET POINT FOR MORE THAN 5 MINUTES (ADJUSTABLE) THE DISCHARGE AIR TEMPERATURE SHALL BE RESET 1°F BELOW ITS CURRENT SET POINT, MODULATE THE COOLING COIL CONTROL VALVE AS REQUIRED. CONTINUE THIS PATTERN UNTIL THE CONTROL VALVE IS FULLY OPEN.
3.3. IF THE ZONE TEMPERATURE FALLS BELOW THE COOLING SETPOINT BY MORE THAN 0.1°F (ADJUSTABLE) AND THE HEATING VALVE IS FULLY CLOSED RESET THE DISCHARGE AIR TEMPERATURE BY 1°F (ADJUSTABLE) ABOVE ITS CURRENT SET POINT, MODULATE THE COOLING COIL CONTROL VALVE AS REQUIRED. SHOULD THE ROOM TEMPERATURE REMAIN BELOW SET POINT FOR MORE THAN 5 MINUTES (ADJUSTABLE) THE DISCHARGE AIR TEMPERATURE SHALL BE RESET 1°F ABOVE ITS CURRENT SET POINT, MODULATE THE COOLING COIL CONTROL VALVE AS REQUIRED. CONTINUE THIS PATTERN UNTIL THE CONTROL VALVE IS FULLY CLOSED.

HEATING MODE:

3.4. IF THE ZONE TEMPERATURE FALLS BELOW THE HEATING SETPOINT BY MORE THAN 0.10°F (ADJUSTABLE) AND THE COOLING COIL CONTROL VALVE IS FULLY CLOSED RESET THE DISCHARGE AIR TEMPERATURE BY 1°F (ADJUSTABLE) ABOVE ITS CURRENT SET POINT, MODULATE THE HEATING COIL CONTROL VALVE AS REQUIRED. SHOULD THE ROOM TEMPERATURE REMAIN BELOW SET POINT FOR MORE THAN 5 MINUTES (ADJUSTABLE) THE DISCHARGE AIR TEMPERATURE SHALL BE RESET 1°F ABOVE ITS CURRENT SET POINT, MODULATE THE HEATING COIL CONTROL VALVE AS REQUIRED. CONTINUE THIS PATTERN UNTIL THE CONTROL VALVE IS FULLY OPEN.
3.5. IF THE ZONE TEMPERATURE RISES ABOVE THE HEATING SETPOINT BY MORE THAN 0.10°F (ADJUSTABLE) AND THE COOLING COIL CONTROL VALVE IS FULLY CLOSED RESET THE DISCHARGE AIR TEMPERATURE BY 1°F (ADJUSTABLE) BELOW ITS CURRENT SET POINT, MODULATE THE HEATING COIL CONTROL VALVE AS REQUIRED. SHOULD THE ROOM TEMPERATURE REMAIN ABOVE SET POINT FOR MORE THAN 5 MINUTES (ADJUSTABLE) THE DISCHARGE AIR TEMPERATURE SHALL BE RESET 1°F (ADJUSTABLE) BELOW ITS CURRENT SET POINT, MODULATE THE HEATING COIL CONTROL VALVE AS REQUIRED. CONTINUE THIS PATTERN UNTIL THE CONTROL VALVE IS FULLY CLOSED.

DEHUMIDIFICATION MODE:

3.6. IF THE ZONE HUMIDITY RISES ABOVE THE HUMIDITY SET POINT (50%) BY MORE THAN 5% (ADJUSTABLE) THE COOLING COIL SHALL MAINTAIN A COOLING COIL DISCHARGE AIR TEMPERATURE OF 52°F (ADJUSTABLE) AND THE HEATING COIL SHALL MAINTAIN THE DISCHARGE AIR SETPOINT.
3.7. IF THE ZONE TEMPERATURE FALLS BELOW THE COOLING SETPOINT BY MORE THAN 0.10°F (ADJUSTABLE) RESET THE DISCHARGE AIR TEMPERATURE BY 1°F (ADJUSTABLE) ABOVE ITS CURRENT SET POINT, MODULATE THE HEATING COIL CONTROL VALVE AS REQUIRED. SHOULD THE ROOM TEMPERATURE REMAIN BELOW SET POINT FOR MORE THAN 5 MINUTES (ADJUSTABLE) THE DISCHARGE AIR TEMPERATURE SHALL BE RESET 1°F ABOVE ITS CURRENT SET POINT, MODULATE THE HEATING COIL CONTROL VALVE AS REQUIRED. CONTINUE THIS PATTERN UNTIL THE CONTROL VALVE IS FULLY OPEN.
3.8. IF THE ZONE TEMPERATURE RISES ABOVE THE HEATING SETPOINT BY MORE THAN 0.10°F (ADJUSTABLE) AND THE COOLING COIL CONTROL VALVE IS FULLY CLOSED RESET THE DISCHARGE AIR TEMPERATURE BY 1°F (ADJUSTABLE) BELOW ITS CURRENT SET POINT, MODULATE THE HEATING COIL CONTROL VALVE AS REQUIRED. SHOULD THE ROOM TEMPERATURE REMAIN ABOVE SET POINT FOR MORE THAN 5 MINUTES (ADJUSTABLE) THE DISCHARGE AIR TEMPERATURE SHALL BE RESET 1°F (ADJUSTABLE) BELOW ITS CURRENT SET POINT, MODULATE THE HEATING COIL CONTROL VALVE AS REQUIRED. CONTINUE THIS PATTERN UNTIL THE CONTROL VALVE IS FULLY CLOSED.
3.9. DISABLE DEHUMIDIFICATION MODE WHEN THE HUMIDITY FALLS BELOW THE HUMIDITY SET POINT BY MORE THAN 15%.

4. ALARMS

4.1 IF THE ROOM TEMPERATURE IS MORE THAN 0.25°F (ADJUSTABLE) ABOVE OR BELOW SET POINT FOR MORE THAN 5 MINUTES A SPECIFIC ALARM SHALL BE GENERATED AND THE CONTROL SYSTEM SHALL SEND OUT A NOTIFICATION. COORDINATE WITH THE BATTELLE CM FOR ALARM CONTACT INFORMATION.

4.2 IF THE ROOM HUMIDITY IS MORE THAN 5% (ADJUSTABLE) ABOVE SET POINT FOR MORE THAN 5 MINUTES A SPECIFIC ALARM SHALL BE GENERATED AND THE CONTROL SYSTEM SHALL SEND OUT A NOTIFICATION. COORDINATE WITH THE BATTELLE CM FOR ALARM CONTACT INFORMATION.

4.3 IF THE HIGH DRAIN PAN WATER DETECTOR ALARM OCCURS GENERATE A SPECIFIC ALARM AT OPERATOR WORKSTATION.

GENERAL NOTES

(UNLESS OTHERWISE SPECIFIED)

1. WIRING ASSOCIATED WITH THE CONTROL SYSTEM SHALL BE DONE BY THE CONTROLS CONTRACTOR. PROGRAMMING SHALL BE DONE BY THE CONTROLS CONTRACTOR.

2. SUPPLY AND INSTALL NECESSARY SOFTWARE, PROGRAMMING, SENSING, CONTROLLING AND CONTROLLED DEVICES, PIPING, WIRING AND COMMISSIONING OF AUTOMATIC CONTROL SYSTEMS, SO AS TO PROVIDE A COMPLETE CONTROL SYSTEM AND MEET THE REQUIREMENTS OF CONTROL SEQUENCES SPECIFIED.

3. THE CONTROL SYSTEM SHALL BE AN EXTENSION ON THE EXISTING JOHNSON CONTROLS SYSTEM LOCATED WITHIN THE BUILDING. ALL CONTROLLERS SHALL BE MANUFACTURED BY JCI. CONNECT TO THE EXISTING JOHNSON CONTROLS HEAD END UNIT LOCATED IN THE MDF ROOM IN THE 3410 CENTRAL UTILITIES PLANT. PROVIDE GRAPHICS ON JCI GRAPHICAL USER INTERFACE.

4. ALL SEQUENCE PROGRAMMING TO BE DONE ONSITE. COORDINATE WITH FMCS CONTROL SPECIALIST FOR DEVICE ADDRESSING. FMCS CONTROL SPECIALIST TO WITNESS ALL PROGRAMMING.

SHEET NOTES

1. PROVIDE PLATINUM RTD TEMPERATURE SENSOR INDUSTRIAL TRANSMITTER WITH PLATINUM ROOM RTD SENSOR. MINCO MODEL TT807 WITH AS2PW0002. PROVIDE 24VAC POWER FROM CONTROLS TRANSFORMER. ROOM SENSOR AND TRANSMITTER SHALL BE CAPABLE OF MEASURING ROOM TEMPERATE TO WITHIN 0.01°F. PROVIDE TESTING DATA OF CALIBRATION AND ACCURACY PRIOR TO ORDERING. SEE H-3-317137 SHEET 1 FOR ROOM LOCATION. SENSOR TO BE AVERAGED.
2. PROVIDE BAPI BA/H220-B4X-Z-CG HUMIDITY SENSOR. SEE H-3-317137 SHEET 1 FOR ROOM LOCATION.
3. PROVIDE NETWORK TEMPERATURE SENSOR FOR MONITORING ONLY.SEE H-3-317137 SHEET 1 FOR ROOM LOCATION.
4. RELOCATE SUPPLY AIR DAMPER COMMAND AND SUPPLY AIR FLOW FROM DEMOLISHED 3410-HVS-VAV-1401 TO NEW 3410-HVS-VAV-1401. RELOCATE POWER TO ACTUATOR AND PRESSURE TRANSMITTER. PROVIDE WIRE AND 3/4" EMT AS NEEDED.
5. BALANCE 3410-HVEF-VAV-1401 TO 900 CFM.
6. POWER FOR CONTROLLERS AND ACTUATORS TO BE FROM TX-1300-1 POWERED FROM PANEL N-P-008.
7. PROVIDE JCI DISCHARGE AIR SENSOR JCI 6311P-1.
8. GRAPHICS, SEQUENCE PROGRAMMING, AND TUNING TO BE DONE AS BID ALTERNATE. IF BID ALTERNATE NOT AWARDED, GRAPHICS, SEQUENCE PROGRAMING AND TUNING TO BE DONE BY BATTELLE FMCS CONTROL SPECIALIST.

RELEASE
05-13-13
DATE
JMK

EDP # S682648-EDP01

DRAWING NO	DRAWING TITLE
REFERENCE DRAWINGS	
NEXT USED ON	

RR	QA BY / DATE	ENGR BY / DATE	CHK BY / DATE	REV BY / DATE	DESCRIPTION	REV NO
REVISIONS						

DRAWN KS KOSCHIK	DATE 3/5/13	U. S. DEPARTMENT OF ENERGY PACIFIC NORTHWEST SITE OFFICE
CHECKED SD BURNETT	5/7/13	Pacific Northwest Division — Battelle — Richland, Washington 99352
ENGR DAVE CREVIER D CREVIER	5/8/13	MECHANICAL LAB 1401 TEM CONTROL WIRING DIAGRAM
APVD DARRELL DESMET	5/9/13	
OTHER		
OTHER		PROJ TITLE TEM MICROSCOPE INSTALLATION
APVD FOR IMPLEMENTATION BY BRIAN GREENAWAY	5/9/13	SIZE D · INDEX NO 7601 · BLDG NO 3410 · DWG NO H-3-317137 · REV NO 0 · SCALE NONE · SHEET 4 OF 4

PNNL-D_R0_10/11

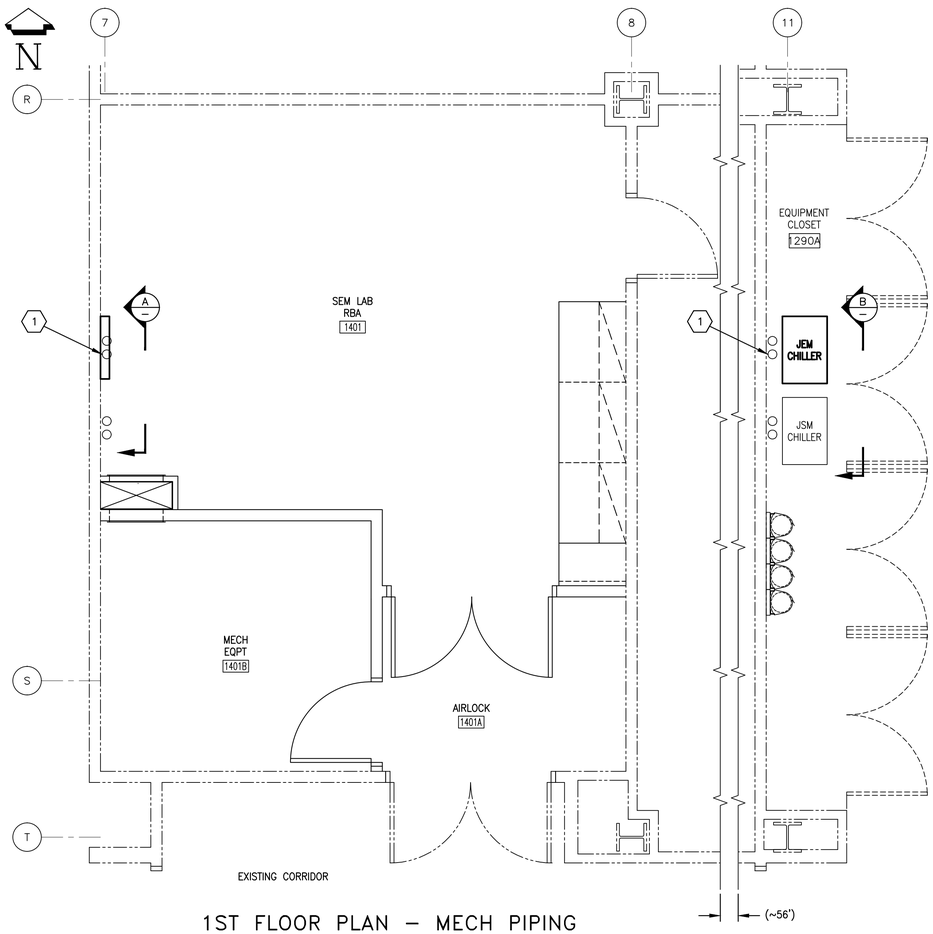

1ST FLOOR PLAN – MECH PIPING

SCALE: 3/8" = 1'-0"

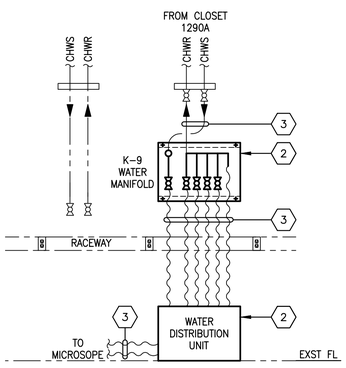

A ELEV @ MANIFOLD

SCALE: 1/2" = 1'-0"

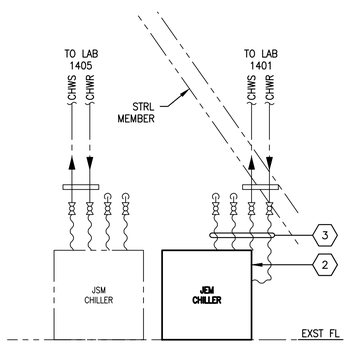

B ELEV @ CHILLER

SCALE: 1/2" = 1'-0"

GENERAL NOTES

(UNLESS OTHERWISE SPECIFIED)

1. SEE H-3-317134, SHEET 1 FOR LEGEND CONTAINING TYPICAL SYMBOLS AND ABBREVIATIONS.
2. DIMENSIONS ARE IN FEET AND INCHES UNLESS OTHERWISE SPECIFIED.
3. FIELD VERIFY DIMENSIONS AND REPORT DISCREPANCIES WITH FIELD CONDITIONS TO BATTELLE CONSTRUCTION MANAGER PRIOR TO ANY CONSTRUCTION.
4. WORK SHALL BE COORDINATED WITH THE BATTELLE CONSTRUCTION MANAGER.
5. SURFACES DAMAGED DURING CONSTRUCTION SHALL BE REPAIRED TO MATCH CONDITION OF EXISTING.
6. ADDITIONAL ABBREVIATIONS USED ARE IN ACCORDANCE WITH ASME Y14.38-1999.

SHEET NOTES

1. EXISTING CHILLED WATER PIPING RUN FROM CHILLER IN SERVICE CORRIDOR TO LAB 1401 TO REMAIN.
2. INSTALL K-9 WATER MANIFOLD, WATER DISTRIBUTION UNIT AND CHILLER IN LOCATION SHOWN. REUSE EXISTING FRAMING CHANNEL ATTACHED TO WALL FOR WATER MANIFOLD ATTACHMENT.
3. RECONNECT EXISTING HOSES.

RELEASE
05-13-13
DATE
JMK

EDP # S682648-EDP01

DRAWN KS KOSCHIK	DATE 3/5/13	U. S. DEPARTMENT OF ENERGY PACIFIC NORTHWEST SITE OFFICE
CHECKED SD BURNETT	5/7/13	Pacific Northwest Division — Battelle — Richland, Washington 99352
ENGR D CREVIER / DAVE CREVIER	5/8/13	MECHANICAL LAB 1401 TEM 1ST FL PIPING PLAN
APVD DARRELL DESMET	5/9/13	
OTHER		
OTHER		PROJ TITLE: TEM MICROSCOPE INSTALLATION
APVD FOR IMPLEMENTATION BY BRIAN GREENAWAY	5/9/13	SIZE D · INDEX NO 8516 · BLDG NO 3410 · DWG NO H-3-317138 · REV NO 0 · SCALE SHOWN · SHEET 1 OF 4

DRAWING NO	DRAWING TITLE
H-3-317134	CIVIL LAB 1401 TEM DWG LIST/SPECS

REFERENCE DRAWINGS

NEXT USED ON

RR	QA BY / DATE	ENGR BY / DATE	CHK BY / DATE	REV BY / DATE	DESCRIPTION	REV NO

REVISIONS

PNNL-D_R0_10/11

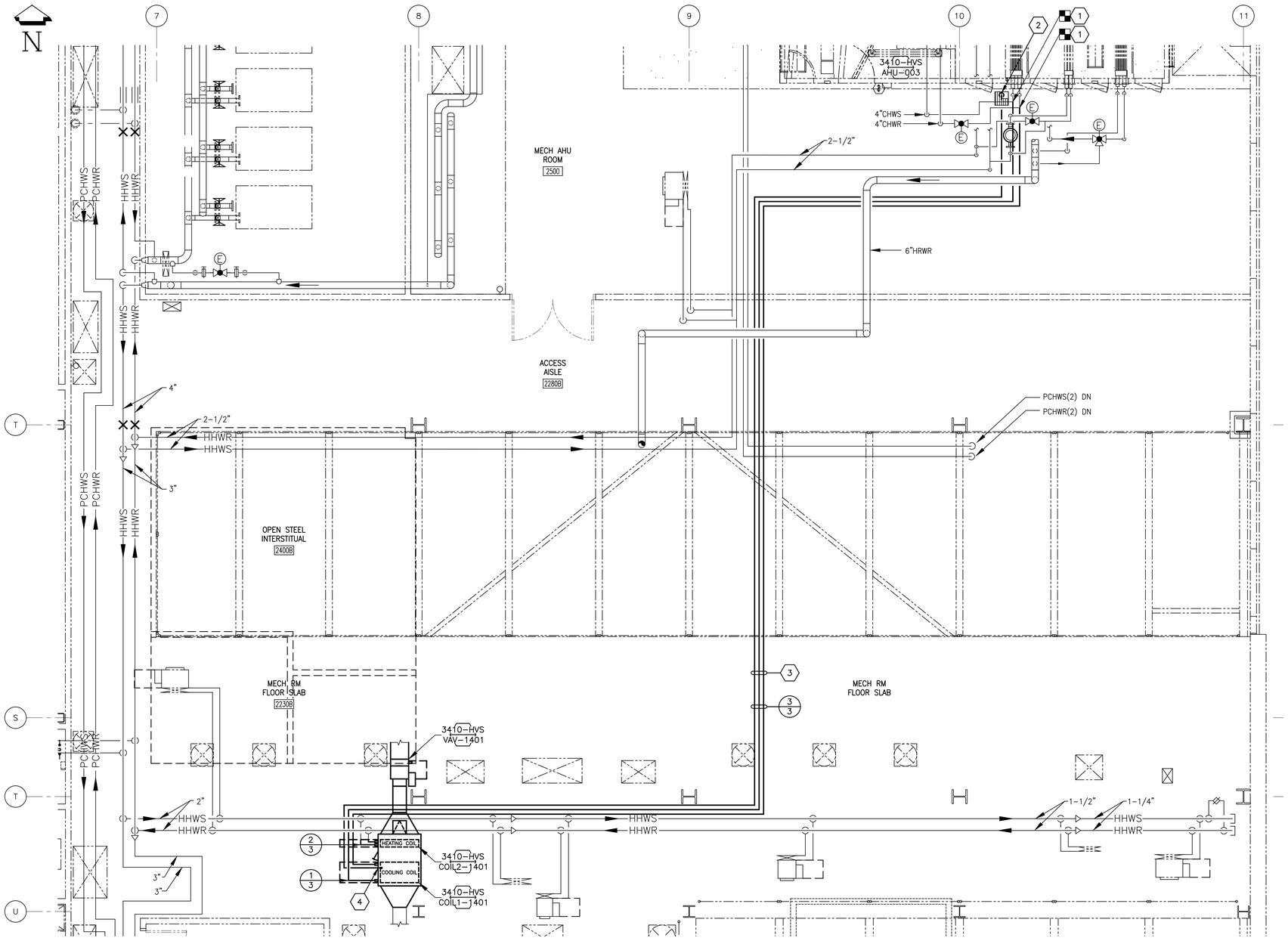

SHEET NOTES

1. FIELD ROUTE 1 1/2" CHWS/CHWR FROM EXISTING ISOLATION VALVE STUB-OUTS LOCATED ON TOP CHWS/CHWR PIPING ROUTED TO COIL.
2. TERMINATE 3/4" CD AT FLOOR DRAIN LOCATION, PROVIDE 1" AIR GAP.
3. FIELD ROUTE 1 1/2" CHWS/CHWR AND 3/4" CD IN CEILING SPACE. SLOPE CD LINE TO DRAIN.
4. CONNECT CONDENSATE PUMP OUTLET (HOSE BARB) TO CONDENSATE DRAIN (3/4" COPPER) AT COIL, PROVIDE HOSE AND CONNECTING BARB (16" MAX HOSE LENGTH).

2ND FLOOR PLAN – PIPING PLAN

SCALE: 1/4" = 1'-0"

RELEASE 05-13-13 DATE JMK

EDP # S682648-EDP01

DRAWN KS KOSCHIK	DATE 3/5/13	U. S. DEPARTMENT OF ENERGY PACIFIC NORTHWEST SITE OFFICE
CHECKED SD BURNETT	5/7/13	Pacific Northwest Division — Battelle — Richland, Washington 99352
ENGR DAVE CREVIER D CREVIER	5/8/13	MECHANICAL LAB 1401 TEM 2ND FL PIPING PLAN
APVD DARRELL DESMET	5/9/13	
OTHER		
OTHER		PROJ TITLE TEM MICROSCOPE INSTALLATION
APVD FOR IMPLEMENTATION BY BRIAN GREENAWAY	5/9/13	SIZE D · INDEX NO 8516 · BLDG NO 3410 · DWG NO H-3-317138 · REV NO 0 · SCALE SHOWN · SHEET 2 OF 4

DRAWING NO	DRAWING TITLE
REFERENCE DRAWINGS	
NEXT USED ON	

RR	QA BY / DATE	ENGR BY / DATE	CHK BY / DATE	REV BY / DATE	DESCRIPTION	REV NO
REVISIONS						

PNNL-D_R0_10/11

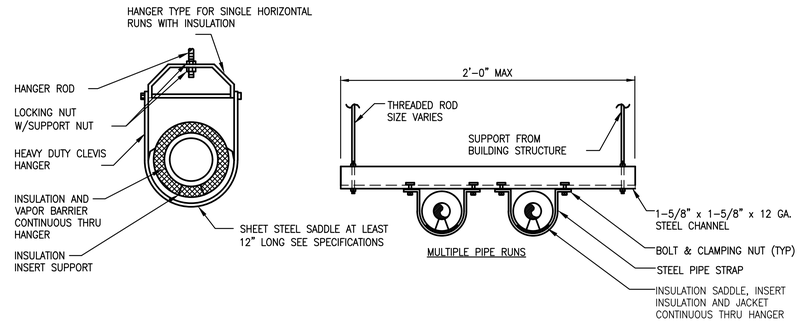

3/2 TYPICAL PIPE HANGER DETAIL

SCALE: NONE

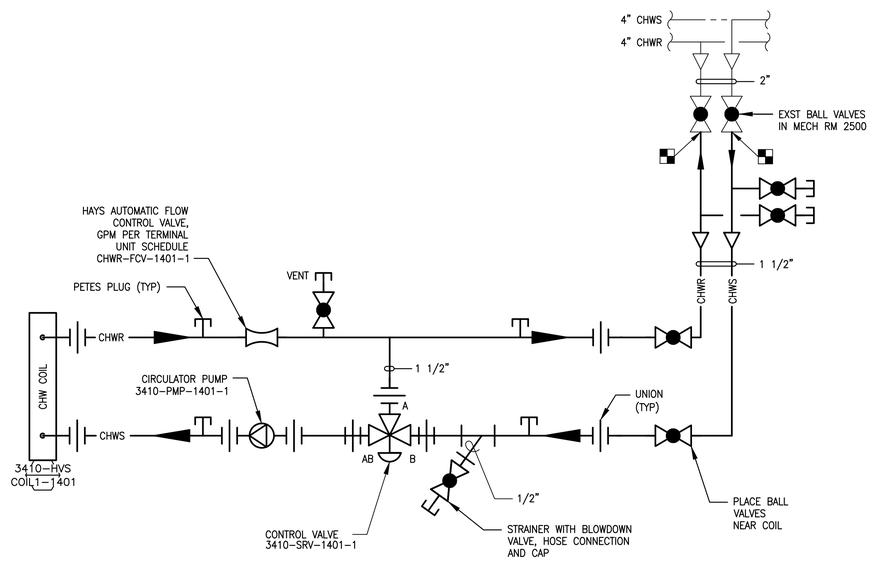

1/2 CHILLED WATER CONNECTION DETAIL

SCALE: NONE

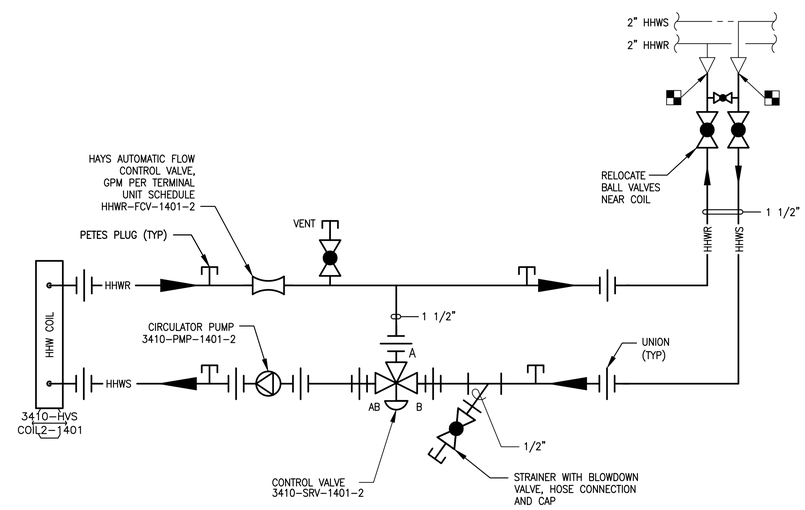

2/2 HEATING COIL PIPING DETAIL

SCALE: NONE

RELEASE
05-13-13
DATE
JMK

EDP # S682648-EDP01

DRAWN KS KOSCHIK	DATE 3/5/13	U. S. DEPARTMENT OF ENERGY PACIFIC NORTHWEST SITE OFFICE
CHECKED SD BURNETT	5/7/13	Pacific Northwest Division — Battelle — Richland, Washington 99352
ENGR DAVE CREVIER D CREVIER	5/8/13	MECHANICAL LAB 1401 TEM PLUMBING DETAILS
APVD DARRELL DESMET	5/9/13	
OTHER		
OTHER		PROJ TITLE TEM MICROSCOPE INSTALLATION
APVD FOR IMPLEMENTATION BY BRIAN GREENAWAY	5/9/13	SIZE D · INDEX NO 8516 · BLDG NO 3410 · DWG NO H-3-317138 · REV NO 0 · SCALE SHOWN · SHEET 3 OF 4

DRAWING NO	DRAWING TITLE
REFERENCE DRAWINGS	
NEXT USED ON	

RR	QA BY / DATE	ENGR BY / DATE	CHK BY / DATE	REV BY / DATE	DESCRIPTION	REV NO
REVISIONS						

PNNL-D_RD_10/11

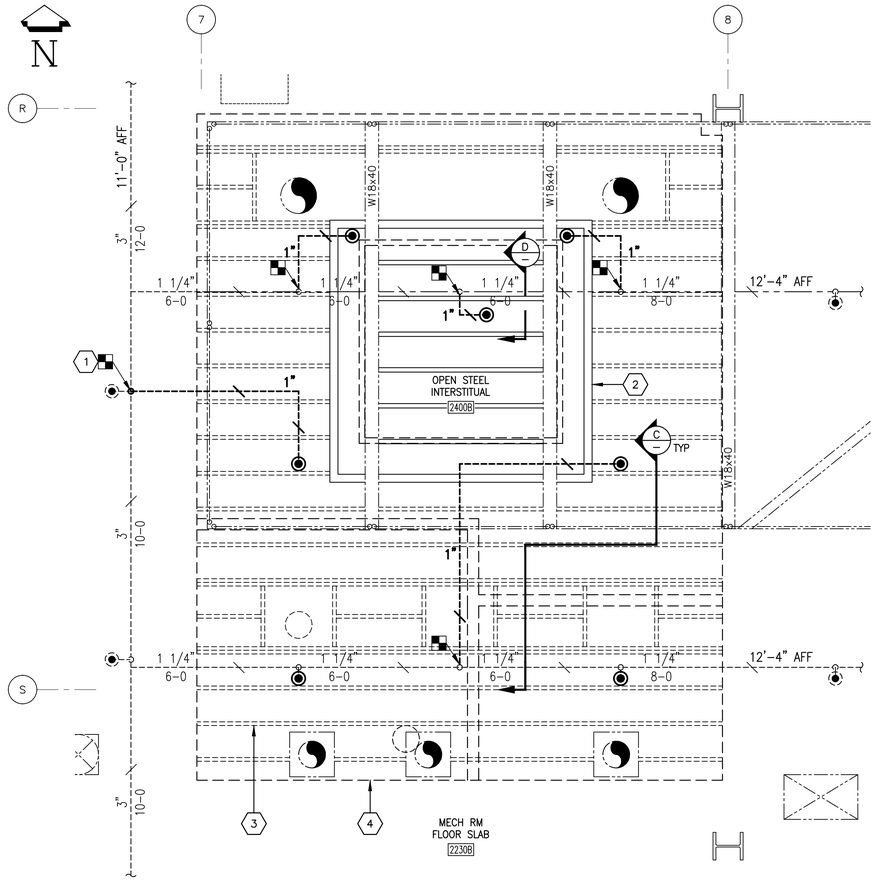

1ST FLOOR PLAN – FIRE PROTECTION (ABOVE CLG)

SCALE: 3/8" = 1'-0"

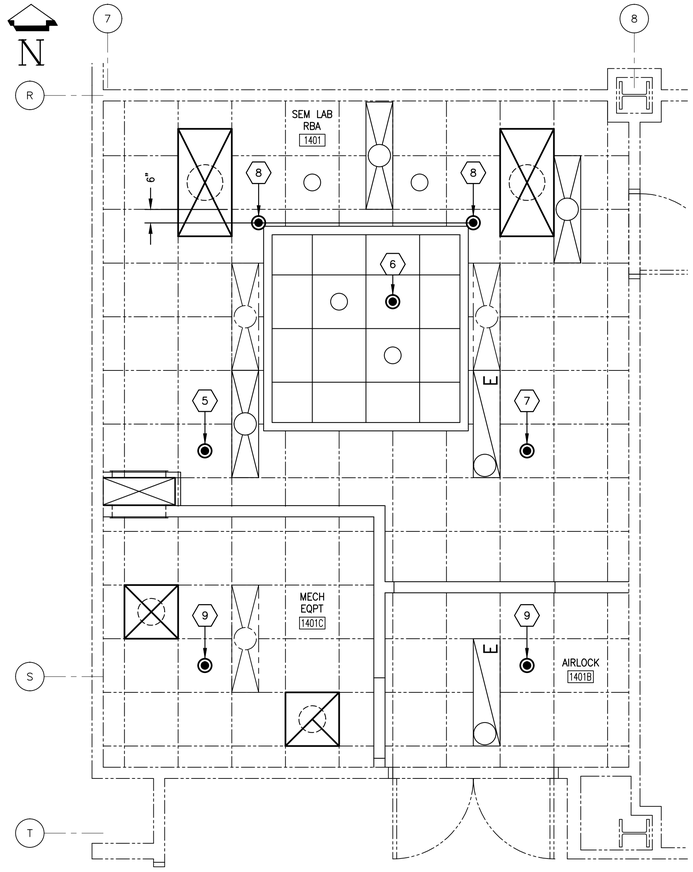

1ST FLOOR PLAN – FIRE PROTECTION (RCP)

SCALE: 3/8" = 1'-0"

SHEET NOTES

1. REMOVE ELBOW AND PROVIDE TEE. EXTEND 1" FIRE PIPE TO NEW LOCATION.
2. NEW METAL JOIST FRAMING ABOVE LAB, SHOWN FOR REF ONLY.
3. EXISTING METAL JOIST FRAMING ABOVE LAB, SHOWN FOR REF ONLY.
4. EXISTING RM OUTLINE BELOW, SHOWN FOR REF ONLY.
5. NEW PENDENT SPRINKLER LOCATION. EXTEND FIRE PIPE AND ARM–OVER AS REQD
6. NEW PENDENT SPRINKLER LOCATION IN RAISED PORTION OF CEILING. MODIFY FIRE PIPE AND ARM–OVER AS REQD
7. RELOCATED PENDENT SPRINKLER LOCATION. EXTEND FIRE PIPE AND ARM–OVER AS REQD
8. RELOCATED PENDENT SPRINKLER LOCATION. EXTEND FIRE PIPE AND ARM–OVER AS REQD. REUSE EXISTING ESCUTCHEON TO DROP BELOW SATC.
9. MODIFY EXISTING FIRE PIPE AND PENDENT WITH ESCUTCHEON REMOVED, SHALL BE FLUSH WITH SATC.
10. PROVIDE FRAMING CHANNEL ANCHORED AT METAL CEILING JOIST FOR FIRE PIPING SUPPORT/HANGERS.
11. COORDINATE PENETRATIONS THRU NEW FRAMING/WALL WHERE EXISTING FIRE PIPE OCCURS.

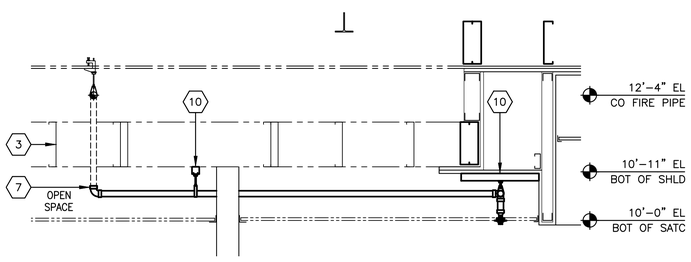

C SECT @ SPRINKLER

SCALE: 3/4" = 1'-0"

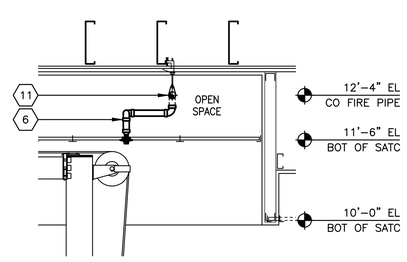

D SECT @ SPRINKLER

SCALE: 3/4" = 1'-0"

RELEASE
05-13-13
DATE
JMK

EDP # S682648–EDP01

DRAWN	DATE
KS KOSCHIK	3/5/13
CHECKED SD BURNETT	5/7/13
ENGR DAVE CREVIER D CREVIER	5/8/13
APVD DARRELL DESMET	5/9/13
OTHER	
OTHER	
APVD FOR IMPLEMENTATION BY BRIAN GREENAWAY	5/9/13

U. S. DEPARTMENT OF ENERGY
PACIFIC NORTHWEST SITE OFFICE

Pacific Northwest Division — Battelle — Richland, Washington 99352

MECHANICAL
LAB 1401 TEM
1ST/2ND FL FIRE PROTECTION

PROJ TITLE: TEM MICROSCOPE INSTALLATION

SIZE	INDEX NO	BLDG NO	DWG NO	REV NO
D	8508	3410	H–3–317138	0

SCALE SHOWN — SHEET 4 OF 4

DRAWING NO	DRAWING TITLE
REFERENCE DRAWINGS	
NEXT USED ON	

RR	QA BY / DATE	ENGR BY / DATE	CHK BY / DATE	REV BY / DATE	DESCRIPTION	REV NO
REVISIONS						

PNNL–D_R0_10/11

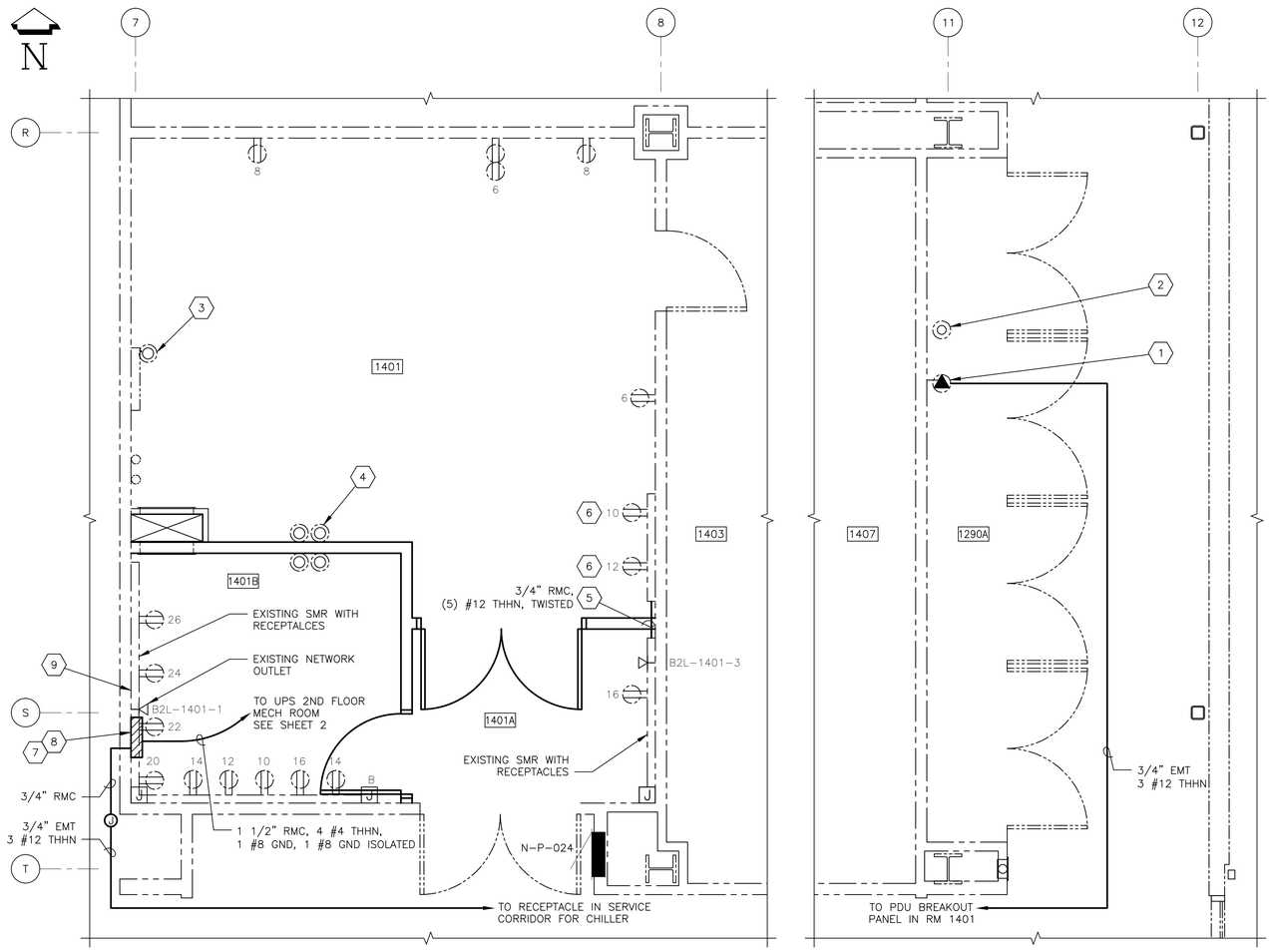

POWER PLAN (AREA 1a & 1b)

SCALE: 3/8" = 1'-0"

NOTE: ALL RECETACLES IN SMR ARE FED FROM PANEL N-P-024

GENERAL NOTES

(UNLESS OTHERWISE SPECIFIED)

1. SEE H-3-317134, SHEET 1 FOR LEGEND CONTAINING TYPICAL SYMBOLS AND ABBREVIATIONS.

SHEET NOTES

1. WALL MOUNT RECEPTACLE, HUBBELL #HBL2320, AT 18" AFF FOR 208V SUPPLY TO CHILLER FROM THE LAB 1401 TEM PDU. LABEL RECEPTACLE "208V, 20A, RM 1401 TEM PDU". RECEPTACLE CONNECTED TO 20A, 208VAC CIRCUIT IN LAB 1401B TEM POWER DISTRIBUTION UNIT. SEE ONE LINE DIAGRAM ON SHEET 3.
2. EXISTING AMPHENOL CONNECTOR FOR CHILLER INTERLOCK CABLE. EXISTING CONNECTION TO LAB 1401, WEST WALL. PROVIDE FLEX CORD TO CHILLER WITH AMPHENOL CONNECTOR #97-3106A-20-3(D)P. SEE DETAIL 1 ON SHEET 3.
3. EXISTING AMPHENOL CONNECTOR FOR CHILLER INTERLOCK. PROVIDE FLEX CORD TO JEOL POWER SUPPLY CONSOLE WITH MATCHING AMPHENOL CONNECTOR #97-3106A-20-3(D)S. SEE DETAIL 1 ON SHEET 3.
4. PROVIDE AMPHENOL BOX RECEPTACLES, SERIES 97, ON OPPOSITE SIDES OF WALL TO SERVE AS BULKHEAD CONNECTORS FOR TWO POWER CABLES. SEE DIAGRAMS ON SHEET 3.
5. PROVIDE 3/4" RMC THROUGH WALL TO CONNECT TO EXISTING SMR.
6. EXISTING 120VAC, 20 AMP DUPLEX RECEPTACLES IN SMR. RECONNECT RECEPTACLES TO EXISTING CIRCUITS #10 AND 12 IN PANEL N-P-024.
7. INSTALL UPS BREAKOUT PANEL/TEM POWER DISTRIBUTION UNIT ON WALL ABOVE EXISTING SMR. CONNECT TO 120/208VAC OUTPUT OF 15kVA UPS INSTALLED ON SECOND FLOOR.
8. ALL NEW POWER CONDUITS TO LAB 1401 SHALL BE RIGID METAL CONDUIT. ALL NEW POWER WIRING SHALL BE TWISTED PER SPECIFICATIONS.
9. LAB 1401 IS A SHIELDED LAB. MINIMIZE PENETRATIONS TO THE SHIELD MATERIAL. USE EXISTING PENETRATIONS WHERE POSSIBLE.

RELEASE 05-13-13 DATE JMK

EDP # S682648-EDP01

DRAWN KJ COALY	DATE 3/4/13	U. S. DEPARTMENT OF ENERGY PACIFIC NORTHWEST SITE OFFICE
CHECKED SD BURNETT	5/7/13	Pacific Northwest Division — Battelle — Richland, Washington 99352
ENGR AL MINTON / AL MINTON	5/7/13	ELECTRICAL LAB 1401 TEM POWER PLAN
APVD BRAD GRAF	5/9/13	
OTHER		
OTHER		PROJ TITLE TEM MICROSCOPE INSTALLATION
APVD FOR IMPLEMENTATION BY BRIAN GREENAWAY	5/9/13	SIZE D · INDEX NO 7301 · BLDG NO 3410 · DWG NO H-3-317139 · REV NO 0 · SCALE SHOWN · SHEET 1 OF 3

DRAWING NO	DRAWING TITLE
H-3-317134	CIVIL LAB 1401 SPECIFICATIONS

REFERENCE DRAWINGS

NEXT USED ON

RR	QA BY / DATE	ENGR BY / DATE	CHK BY / DATE	REV BY / DATE	DESCRIPTION	REV NO

REVISIONS

PNNL-D_RO_10/11

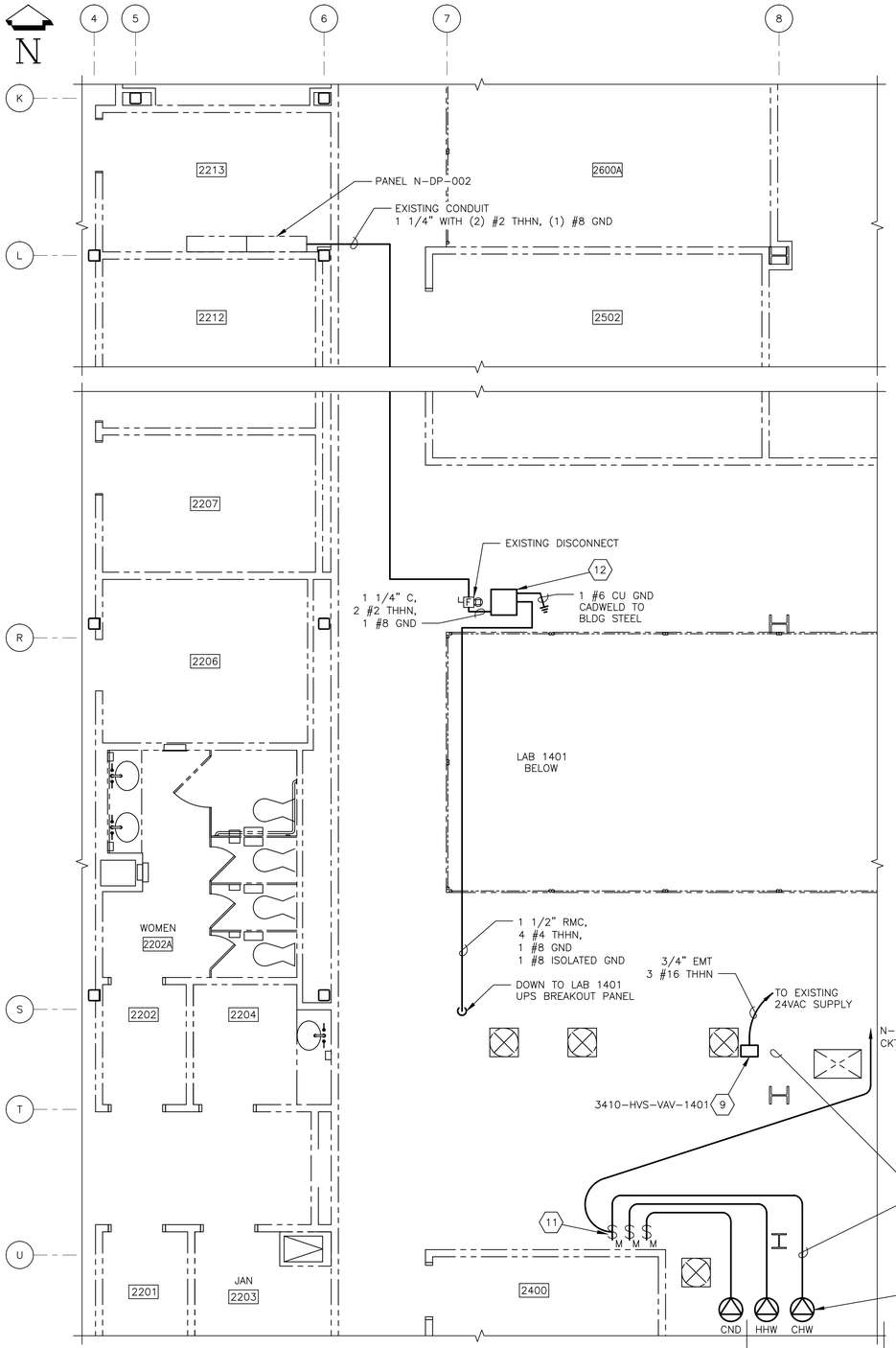

PARTIAL 2ND FLOOR PLAN (AREAS 2 & 3)

SCALE: 1/4" = 1'-0"

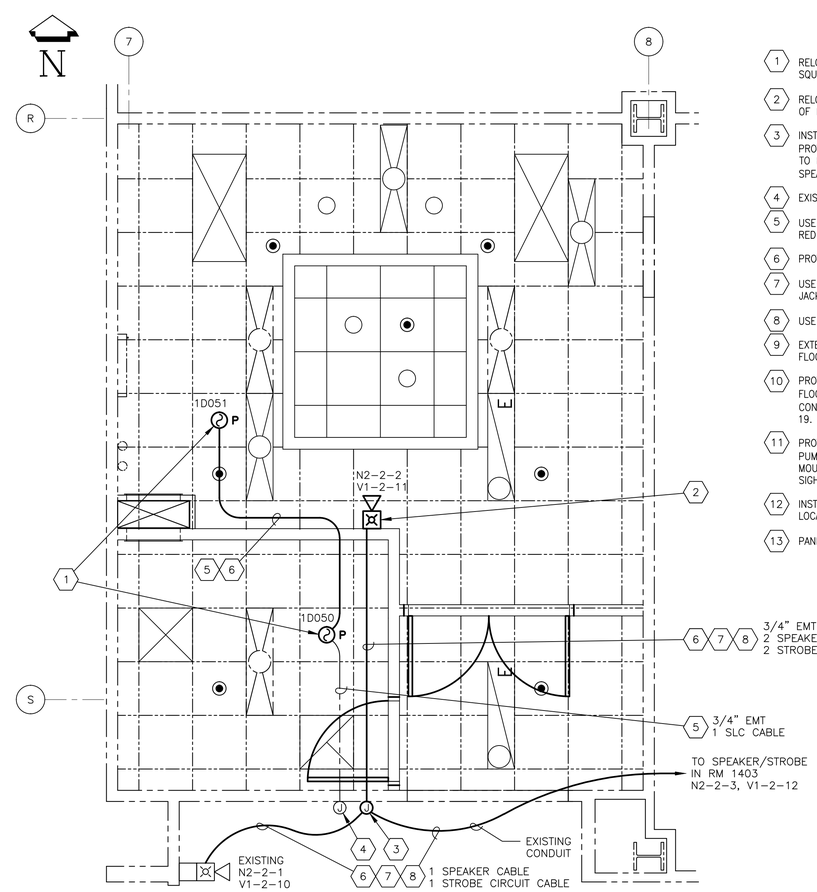

FIRE ALARM PLAN (AREA 1a)

SCALE: 3/8" = 1'-0"

SHEET NOTES

1. RELOCATE EXISTING SMOKE DETECTOR AND DETECTOR BASES. CEILING MOUNT IN SUSPENDED CEILING IN 4" SQUARE ELECTRICAL BOX.
2. RELOCATE EXISTING SPEAKER/STROBE TO WALL. WALL MOUNT WITH RECESSED BOX AT 80" AFF TO BOTTOM OF DEVICE.
3. INSTALL NEW JUNCTION BOX ABOVE CEILING ON CORRIDOR SIDE FOR FIRE ALARM NOTIFICATION DEVICES. PROVIDE RED COVER WITH WHITE LETTERING WITH WORD "FIRE". CONNECT TWO CONDUITS FROM JB DOWN TO EXISTING CONDUITS IN WALL THAT CONNECT TO SPEAKER STROBES. PULL NEW WIRE AND CONNECT TO SPEAKER/STROBES.
4. EXISTING JUNCTION BOX ABOVE CEILING CORRIDOR SIDE FOR SMOKE DETECTOR SLC CIRCUITS.
5. USE WEST PENN #60991 FOR SIGNAL LINE CIRCUIT, TYPE FPLP, 1 PAIR 16 AWG, TWISTED, NON-SHIELDED, RED JACKET.
6. PROVIDE SAME TYPE, SIZE, AND COLOR WIRE AS USED FOR EXISTING FIRE ALARM CIRCUITS.
7. USE WEST PENN #60990 FOR SPEAKER CIRCUIT, TYPE FPLP, 1 PAIR #16 AWG, TWISTED, SHIELDED, RED JACKET WITH YELLOW STRIPE.
8. USE 2 #14 THHN IN EMT FOR STROBE CIRCUIT.
9. EXTEND EXISTING 24VAC POWER SUPPLY FOR 3410-HVS-VAV-1401 TO NEW VAV LOCATION IN SECOND FLOOR MECHANICAL ROOM.
10. PROVIDE 120VAC POWER SUPPLY FOR TWO CIRCULATOR PUMPS, AND CONDENSATE PUMP IN SECOND FLOOR MECHANICAL ROOM. ROUTE 3/4" EMT WITH 3 #12 THHN TO PANEL N-P-063 IN ELECTRICAL ROOM. CONNECT TO 15 AMP, SINGLE POLE, 120V, CIRCUIT BREAKER (GE # THHQ 1115), INSTALLED IN CIRCUIT 19.
11. PROVIDE FRACTIONAL HORSEPOWER MANUAL MOTOR STARTER FOR EACH CONDENSATE AND CIRCULATOR PUMP. USE SQUARE D CLASS 2510 TYPE #FG5; SINGLE POLE, TOGGLE, NEMA 1, HANDLE LOCK, SURFACE MOUNT, STANDARD TRIP THERMAL UNIT. THERMAL UNIT PROVIDED BY ELECTRICIANS. SURFACE MOUNT WITHIN SIGHT OF CIRCULATOR PUMP LOCATION.
12. INSTALL NEW 15kVA UPS UNIT ADJACENT TO EXISTING 100 AMP, 208V, DISCONNECT ON SECOND FLOOR. LOCATE AND CONNECT USING FLEX CONDUIT SO THERE IS ADEQUATE ELECTRICAL WORKING CLEARANCE.
13. PANEL N-P-063 IS LOCATED IN ELECTRICAL ROOM #2504 AT NORTH END OF BUILDING 3410.

RELEASE
05-13-13
DATE
JMK

EDP # S682648-EDP01

DRAWN KJ COALY	DATE 3/4/13	U. S. DEPARTMENT OF ENERGY PACIFIC NORTHWEST SITE OFFICE
CHECKED SD BURNETT	5/7/13	Pacific Northwest Division — Battelle — Richland, Washington 99352
ENGR AL MINTON AL MINTON	5/7/13	ELECTRICAL LAB 1401 TEM
APVD BRAD GRAF	5/9/13	2ND FL POWER/FIRE ALARM PLANS
OTHER		
OTHER		PROJ TITLE TEM MICROSCOPE INSTALLATION
APVD FOR IMPLEMENTATION BY BRIAN GREENAWAY	5/9/13	SIZE D · INDEX NO 7301 7701 · BLDG NO 3410 · DWG NO H-3-317139 · REV NO 0 SCALE SHOWN · SHEET 2 OF 3

DRAWING NO	DRAWING TITLE
REFERENCE DRAWINGS	
NEXT USED ON	

RR	QA BY / DATE	ENGR BY / DATE	CHK BY / DATE	REV BY / DATE	DESCRIPTION	REV NO
REVISIONS						

PNNL-D_RO_10/11

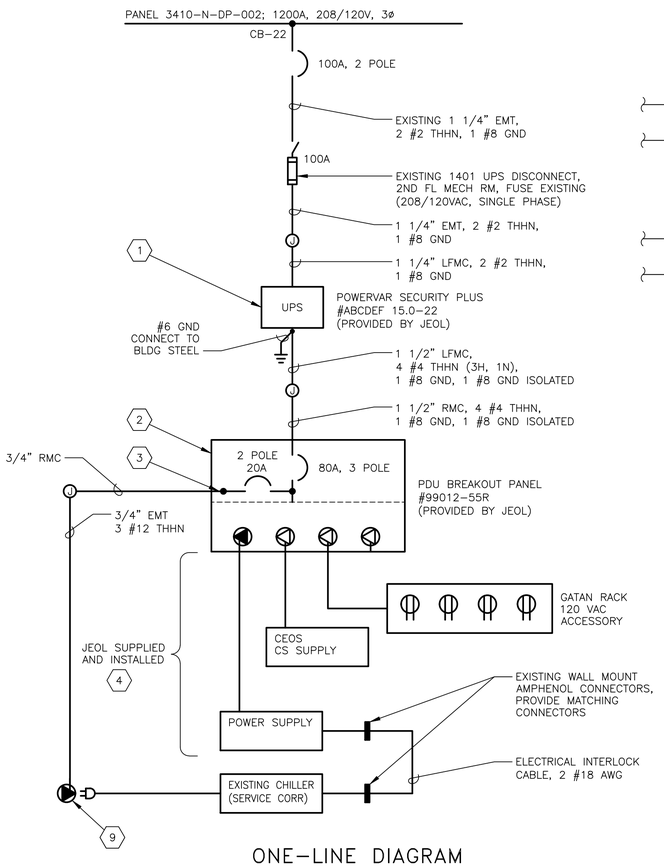

ONE-LINE DIAGRAM

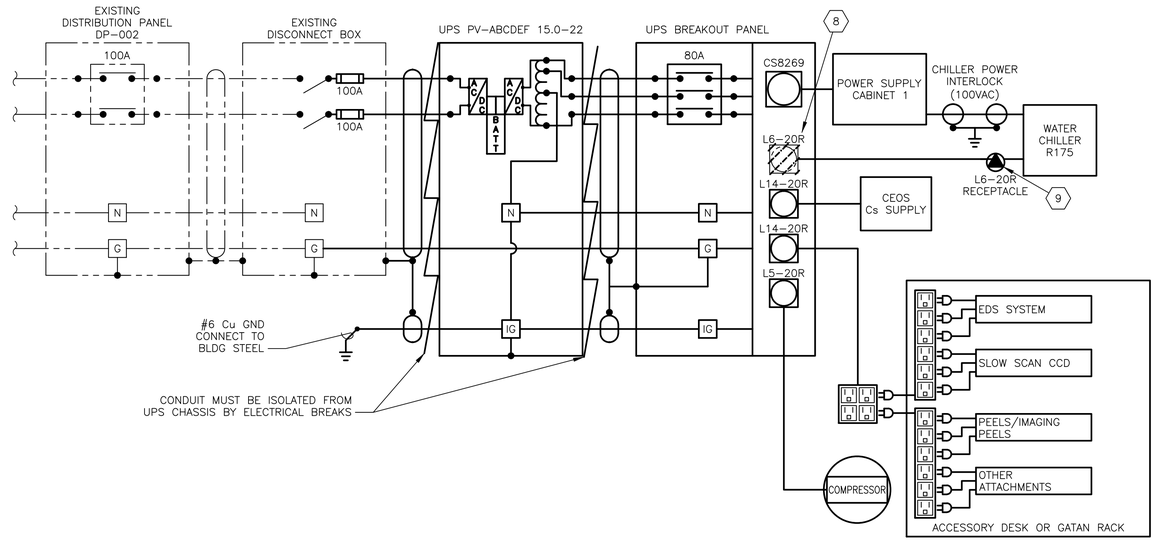

RECOMMENDED JEM-ARM200(C)F WIRING DIAGRAM

SHEET NOTES

1. INSTALL UPS IN SECOND FLOOR MECHANICAL ROOM ADJACENT TO 1401 UPS DISCONNECT.
2. UPS BREAKOUT PANEL INSTALLED IN LAB 1401.
3. REMOVE L6-20A RECEPTACLE FROM PDU/BREAKOUT PANEL AND CONNECT REMOTE CHILLER RECEPTACLE TO 20AMP CIRCUIT INSIDE PDU.
4. VENDOR (JOEL) INSTALLED, BATTELLE MAY SUPPORT BY PROVIDING ELECTRICAL BOX AND CONDUIT MODIFICATIONS.
5. EXISTING AMPHENOL BOX RECEPTACLE CONNECTORS MOUNTED IN STEEL BOX RECESSED IN WALL.
6. PROVIDE PLUG OR CONNECTOR NECESSARY OR FLEXIBLE CORD TO CONNECT TO EQUIPMENT.
7. REFER TO CHILLER MANUFACTURER'S MANUALS FOR EQUIPMENT WIRING SCHEMATICS.
8. REMOVE L6-20R RECEPTACLE AND CONNECT TO 208V, 20 AMP CIRCUIT PROVIDED FOR CHILLER. PROVIDE BLANK COVER ON OPENING.
9. HUBBELL #HBL2320 RECEPTACLE, 2P 3W, 20A, 250V, NEMA L6-20R, TWISTLOCK, WALL MOUNTED IN SERVICE CORRIDOR NEAR CHILLER.
10. THE PC CABLE IS FUSED AT 15 AMPS IN POWER SUPPLY CABINET #1.
11. INSTALL AMPHENOL PLUG ON COMPUTER POWER CABLE. USE AMPHENOL #97-3106A-16-10SW. THE CABLE HAS THREE #14 AWG WIRES AT 100VAC.
12. INSTALL AMPHENOL WALL BOX CONNECTOR ON WALL IN 1401B AT 18" AFF. USE AMPHENOL #97-3102A-16-10PW.
13. INSTALL AMPHENOL WALL BOX CONNECTOR ON WALL IN 1401 AT 18" AFF. USE AMPHENOL #97-3102A-16-10SW.
14. INSTALL AMPHENOL PLUG ON COMPUTER POWER CABLE. USE AMPHENOL #97-3106A-16-10PW.
15. THE CONDUCTORS IN THE PS15 CABLE ARE FUSED AT 10 AMPS AND 7 AMPS AT POWER SUPPLY CABINET #1.
16. INSTALL AMPHENOL PLUG ON PS15 CABLE FROM POWER CABINET #1. USE AMPHENOL SERIES 97 CONNECTOR #97-3106A-18-12SW. THE PS15 CABLE HAS TWO #16 AWG WIRES AT 100VAC AND FOUR #18 AWG WIRES AT 200VAC.
17. INSTALL AMPHENOL WALL BOX CONNECTOR ON WALL IN 1401B AT 18" AFF. USE AMPHENOL #97-3102A-18-12PW.
18. INSTALL AMPHENOL WALL BOX CONNECTOR ON WALL IN 1401 AT 18" AFF. USE AMPHENOL #97-3102A-18-12SW.
19. INSTALL AMPHENOL PLUG ON PS15 CABLE. USE AMPHENOL #97-3106A-18-12PW.

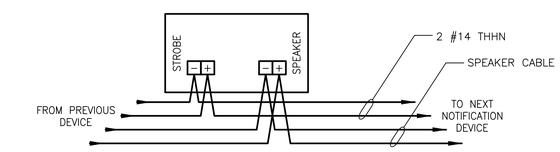

TYPICAL SPEAKER STROBE WIRING DIAGRAM

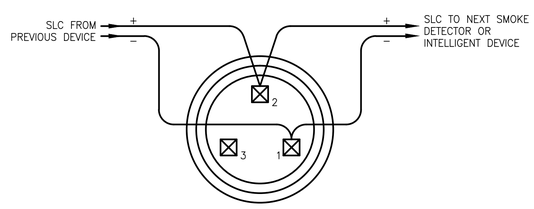

TYPICAL SMOKE DETECTOR WIRING DIAGRAM

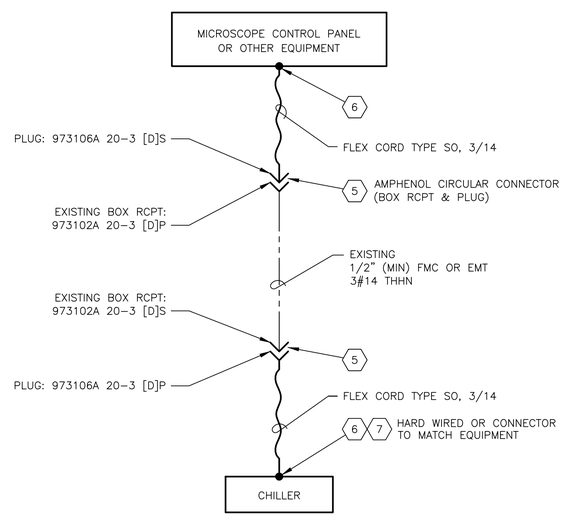

1/1 CHILLER ELECTRICAL INTERLOCK – REMOTE LOCATED
SCALE: NONE

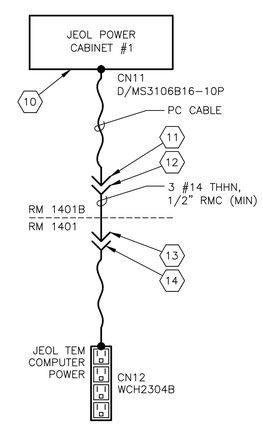

CABLE CONNECTOR DIAGRAM
CONNECTORS FOR JEOL COMPUTER POWER CABLE

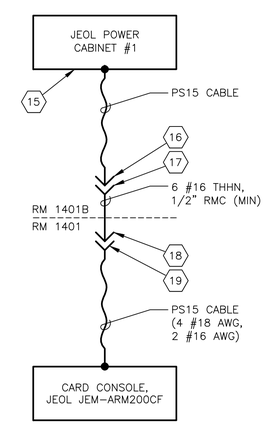

CABLE CONNECTOR DIAGRAM
CONNECTORS FOR JEOL PS15 POWER CABLE

RELEASE 05-13-13
DATE
JMK

EDP # S682648-EDP01

DRAWN	DATE
KJ COALY	3/4/13
CHECKED SD BURNETT	5/7/13
ENGR AL MINTON AL MINTON	5/7/13
APVD BRAD GRAF	5/9/13
OTHER	
OTHER	
APVD FOR IMPLEMENTATION BY BRIAN GREENAWAY	5/9/13

U. S. DEPARTMENT OF ENERGY
PACIFIC NORTHWEST SITE OFFICE
Pacific Northwest Division — Battelle — Richland, Washington 99352

ELECTRICAL
LAB 1401 TEM
ONE-LINE DIAGRAMS

PROJ TITLE: TEM MICROSCOPE INSTALLATION

SIZE	INDEX NO	BLDG NO	DWG NO	REV NO
D	7302 7702	3410	H-3-317139	0

SCALE NONE — SHEET 3 OF 3

DRAWING NO	DRAWING TITLE
REFERENCE DRAWINGS	
NEXT USED ON	

RR	QA BY / DATE	ENGR BY / DATE	CHK BY / DATE	REV BY / DATE	DESCRIPTION	REV NO
REVISIONS						

PNNL-D_R0_10/11

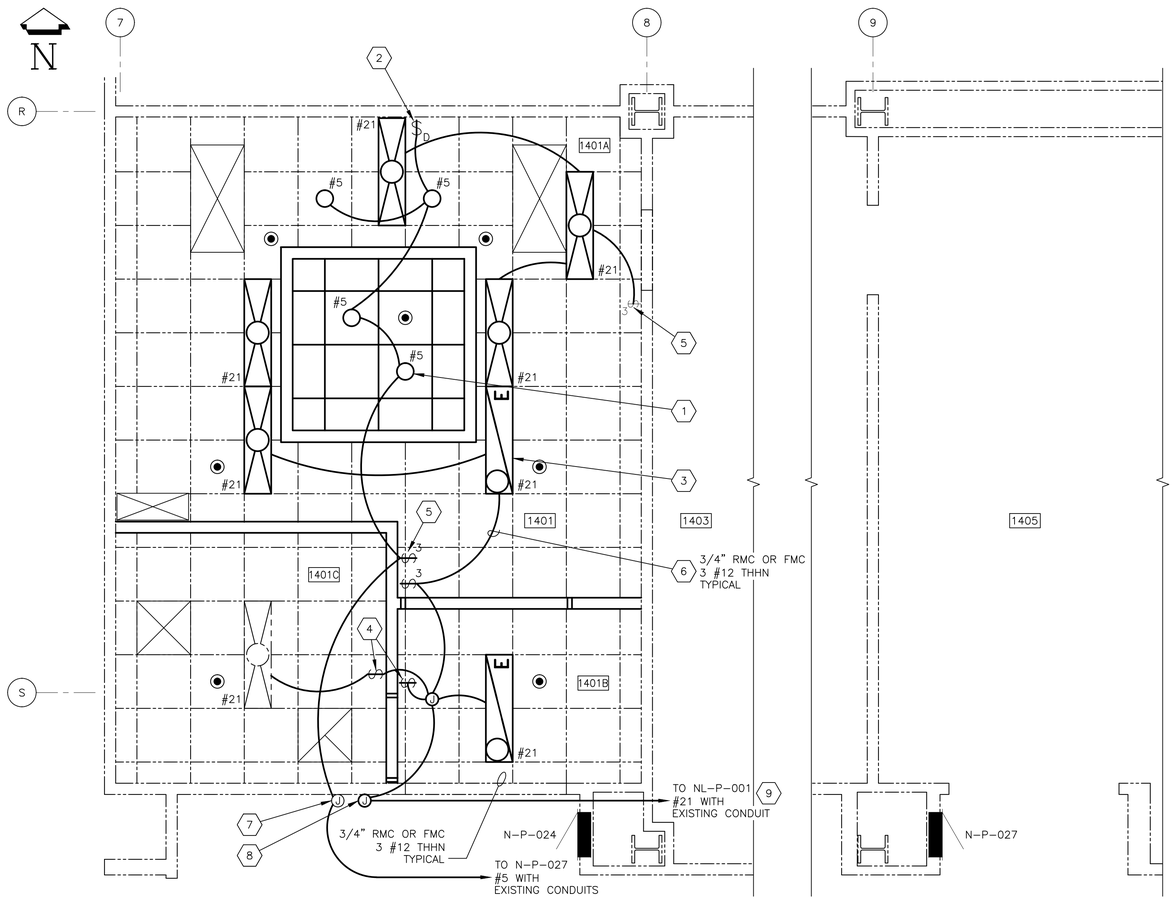

LIGHTING PLAN (AREA 1a)

SCALE: 3/8" = 1'-0"

GENERAL NOTES

(UNLESS OTHERWISE SPECIFIED)

1. SEE H-3-317134, SHEET 1 FOR LEGEND CONTAINING TYPICAL SYMBOLS AND ABBREVIATIONS.

SHEET NOTES

1. RELOCATE EXISTING CAN LIGHT FIXTURES TO NEW LOCATIONS AS SHOWN. CLEAN LIGHT FIXTURE REFLECTORS. CAN LIGHTS ARE 120VAC ON PANEL N-P-027 CIRCUIT 5. THIS CIRCUIT IS ALSO CONNECTED TO CAN LIGHT FIXTURES IN ROOM 1405. INSTALL NEW INCANDESCENT 100 WATT LAMPS IN FIXTURES.
2. INSTALL LEVITON #6674-P UNIVERSAL DIMMER IN EXISTING RECESSED WALL BOX THAT WAS PREVIOUSLY USED FOR 60A RECEPTACLE. INTERCEPT EXISTING CONDUIT ABOVE CEILING TO CONNECT TO CAN LIGHT FIXTURE RACEWAY. CONNECT TO CAN LIGHT CIRCUIT N-P-027, CKT #5.
3. RELOCATE EXISTING FLUORESCENT LIGHT FIXTURES TO NEW LOCATIONS AS SHOWN. CLEAN LIGHT FIXTURE LENSES AND REFLECTORS. FLUORESCENT LIGHT FIXTURES ARE 277VAC ON PANEL N-P-001 CIRCUIT 21. THIS CIRCUIT IS ALSO CONNECTED TO LIGHTS IN WOMEN'S RESTROOM, WOMEN'S LOCKER ROOM, ELEVATOR EQUIPMENT ROOM, AND CORRIDOR.
4. INSTALL SINGLE POLE, 15AMP, 277VAC, HEAVY DUTY, IVORY TOGGLE SWITCH IN RECESSED WALL BOX AT ELEVATION TO MATCH EXISTING. USE HUBBELL #HBL1201I, WITH IVORY NYLON WALL PLATE.
5. INSTALL THREE WAY, 15 AMP, 277VAC, HEAVY DUTY, IVORY TOGGLE SWITCHES IN RECESSED WALL BOX AT ELEVATION TO MATCH EXISTING. USE HUBBELL #HBL1203I WITH IVORY NYLON WALL PLATE.
6. NEW CONDUIT INSTALLED IN LAB 1401 TEM AREA SHALL BE RIGID METAL CONDUIT OR LIQUID TIGHT FLEXIBLE METAL CONDUIT AS ALLOWED BY NEC. ALL NEW POWER WIRING INSTALLED IN LAB 1401 SHALL BE TWISTED PER SPECIFICATIONS.
7. EXISTING JUNCTION BOXES FOR LIGHTING ABOVE CEILING ON CORRIDOR SIDE
8. PROVIDE BLANK COVER PLATES MATCHING WALL COLOR OVER ANY OPEN JUNCTION BOXES.
9. PANEL NL-P-001 IS LOCATED ON NORTH END OF ELECTRICAL ROOM 2504.

RELEASE
05-13-13
DATE
JMK

EDP # S682648-EDP01

DRAWN	DATE
KJ COALY	3/4/13
CHECKED SD BURNETT	5/7/13
ENGR AL MINTON / AL MINTON	5/7/13
APVD BRAD GRAF	5/9/13
OTHER	
OTHER	
APVD FOR IMPLEMENTATION BY BRIAN GREENAWAY	5/9/13

U. S. DEPARTMENT OF ENERGY
PACIFIC NORTHWEST SITE OFFICE

Pacific Northwest Division — Battelle — Richland, Washington 99352

ELECTRICAL
LAB 1401 TEM
LIGHTING PLAN

PROJ TITLE: TEM MICROSCOPE INSTALLATION

SIZE	INDEX NO	BLDG NO	DWG NO	REV NO
D	7401	3410	H-3-317140	0

SCALE SHOWN — SHEET 1 OF 1

DRAWING NO	DRAWING TITLE
H-3-317134	CIVIL LAB 1401 SPECIFICATIONS

REFERENCE DRAWINGS

NEXT USED ON

RR	QA BY / DATE	ENGR BY / DATE	CHK BY / DATE	REV BY / DATE	DESCRIPTION	REV NO

REVISIONS

PNNL-D_R0_10/11

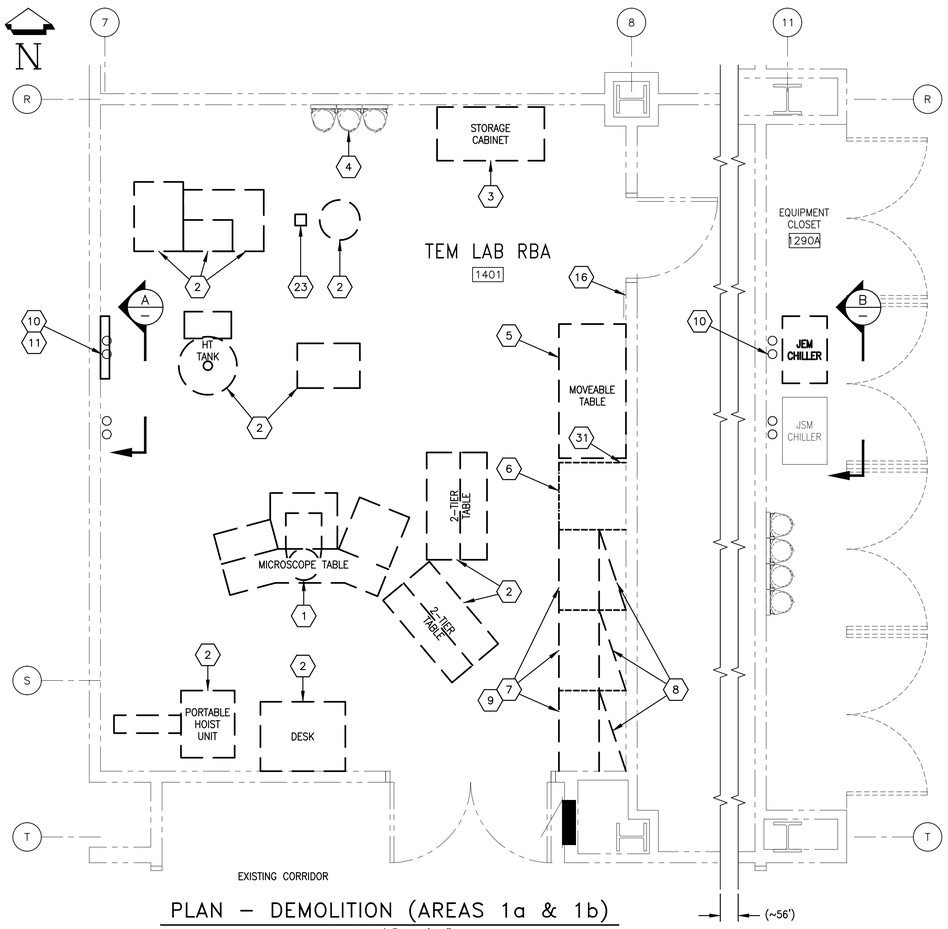

PLAN – DEMOLITION (AREAS 1a & 1b)

SCALE: 3/8" = 1'-0"

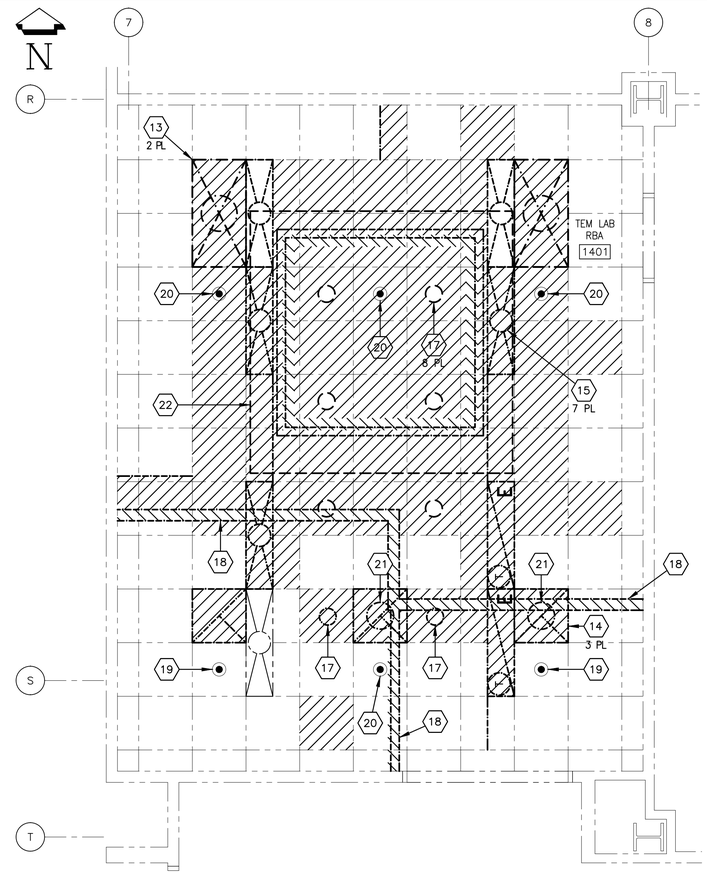

REFLECTED CEILING PLAN – DEMOLITION (AREA 1a)

SCALE: 3/8" = 1'-0"

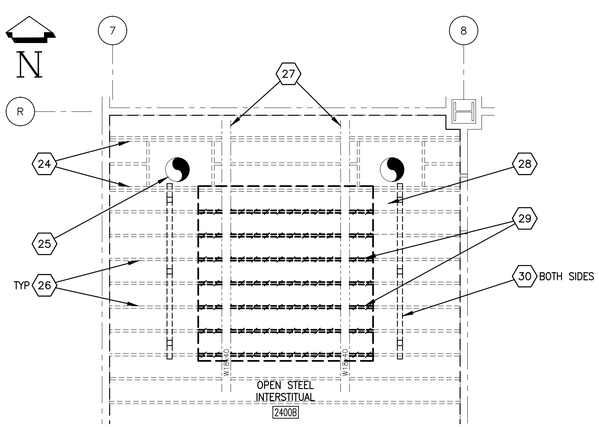

EXISTING STRUCTURAL CLG. FRAMING PLAN

SCALE: 1/4" = 1'-0" (CEILING SUPPORT STRUCTURE ABOVE SATC)

NOTE: SEE ENTIRE EXISTING STRUCTURAL CLG. FRAMING PLAN ON H-3-317135, SHEET 1

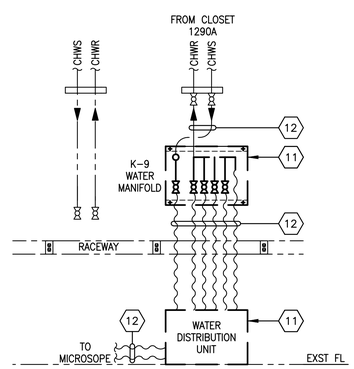

A ELEV @ MANIFOLD

SCALE: 1/2" = 1'-0"

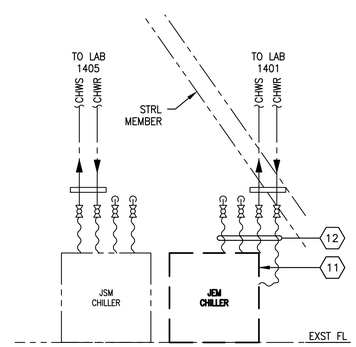

B ELEV @ CHILLER

SCALE: 1/2" = 1'-0"

GENERAL NOTES

(UNLESS OTHERWISE SPECIFIED)

1. SEE DRAWING H-3-317134, SHEET 1 FOR LEGEND CONTAINING TYPICAL CEILING SYMBOLS, ABBREVIATIONS, AND KEY PLANS.
2. CONTRACTOR MAY WISH TO CONSIDER THE REMOVAL OF THE ENTIRE EXISTING CEILING (OR A PORTION THEREOF), INCLUDING THE STRUCTURAL STEEL "C" JOISTS THAT SUPPORT IT, RATHER THAN PUT IN TEMPORARY SHORING ON BOTH SIDES OF THE LAB. IT MAY SAVE TIME AND MONEY TO REMOVE IT ALL AND REBUILD ANEW BEGINNING WITH THE STRUCTURAL STEEL JOISTS (AND OTHER SUPPORT FRAMING), PLYWOOD SHEATHING, SHEILDING AND GYPSUM BOARD, FOLLOWED BY THE REINSTALLATION OF THE SUSPENDED CEILING SYSTEM ONCE EVERYTHING ABOVE HAS BEEN REDONE. THIS IS MENTIONED SIMPLY AS AN OPTION FOR THE CONTRACTOR TO CONSIDER. ANY AND ALL COSTS RELATED TO THIS OPTION SHALL BE THE RESPOSIBILITY OF THE GENERAL CONTRACTOR. ANY STRUCTURAL ENGINEERING RELATED TO A PROPOSED ALTERNATIVE CEILING SUPPORT STRUCTURE WOULD BE THE RESPONSIBILITY OF THE GENERAL CONTRACTOR AND NEED TO BE REVIEWED BY BATTELLE BEFORE BEING IMPLEMENTED. IT IS EXPECTED THAT THE SHIELDING CONTRACTOR WOULD ALSO BE A STAKEHOLDER IN THIS DECISION.

SHEET NOTES

1. EXISTING MICROSCOPE TO BE RELOCATED BY BATTELLE (NIC).
2. EXISTING MICROSCOPE-RELATED SUPPORT EQUIPMENT TO BE RELOCATED BY BATTELLE (NIC).
3. EXISTING METAL CABINET SHALL BE RELOCATED BY CONTRACTOR TO AIRLOCK AS SHOWN ON H-3-317135, SHEET 1. REMOVE ALL SEALANT APPLIED AROUND BACK PERIMETER EDGE NEXT TO WALL AND REPAINT.
4. 2 OF 3 EXISTING GAS BOTTLE WALL BRACKETS TO BE RELOCATED BY CONTRACTOR. SEE FLOOR PLAN ON H-3-317135, SHEET 1. THE THIRD BRACKET TO BE SALVAGED TO BATTELLE. EXISTING GAS BOTTLE MANIFOLD ON WALL ABOVE THE BRACKETS SHALL ALSO BE MOVED TO SAME LOCATION AS GAS BOTTLE WALL BRACKETS. FOR TYPICAL WALL PATCH WALL AND PAINT SEE 099000 OF THE SPECIFICATIONS.
5. EXISTING MOVEABLE TABLE TO BE RELOCATED BY BATTELLE (NIC).
6. EXISTING 30-INCH KNEE SPACE SEGMENT OF LOWER CABINET TO BE DEMOLISHED BY CONTRACTOR.
7. (3) EXISTING 36-INCH SEGMENTS OF LOWER CABINET TO BE RELOCATED BY CONTRACTOR AS SHOWN ON FLOOR PLAN ON H-3-317135, SHEET 1.
8. (3) EXISTING 36-INCH SEGMENTS OF UPPER CABINET TO BE RELOCATED BY CONTRACTOR AS SHOWN ON FLOOR PLAN ON H-3-317135, SHEET 1.
9. EXISTING BLACK EPOXY RESIN COUNTERTOP AND BACKSPLASH TO BE RELOCATED AS NOTED ON FLOOR PLAN. FIELD MEASURE AND CUT TO FIT. PROVIDE NEW COUNTER SUPPORT ANGLE ALONG SOUTH WALL.
10. EXISTING CHILLED WATER PIPING RUN FROM CHILLER IN SERVICE CORRIDOR TO LAB 1401 TO REMAIN.
11. BATTELLE TO REMOVE EXISTING K-9 WATER MANIFOLD, WATER DISTRIBUTION UNIT AND CHILLER. EXISTING FRAMING CHANNEL ATTACHED TO WALL FOR WATER MANIFOLD MOUNTING TO REMAIN IN PLACE FOR MOUNTING OF THE NEW MANIFOLD BY MICROSCOPE VENDOR.
12. BATTELLE TO DISCONNECT EXISTING HOSES AND RETAIN FOR REUSE. SEE MECHANICAL.
13. CONTRACTOR TO REMOVE EXISTING SUPPLY GRILLES. SEE MECHANICAL.
14. CONTRACTOR TO REMOVE EXISTING EXHAUST GRILLES, RETAIN (1) FOR REUSE. SEE MECHANICAL.
15. CONTRACTOR TO REMOVE EXISTING FLUORESCENT LIGHT FIXTURES, SEE ELECTRICAL FOR DEMO & SALVAGE.
16. EXISTING ROOM SIGN TO REMAIN. SEE SHEET NOTE 5 ON DRAWING H-3-317135, SHEET 1 FOR LOCATION OF CASEWORK BASED ON ROOM SIGN LOCATION.
17. 8 EXISTING CAN LIGHTS. CONTRACTOR TO SALVAGE 6 OF THE 8 EXISTING CAN LIGHTS AND RELOCATE AS NOTED ON H-3-317135, SHEET 1. CONTRACTOR TO DEMOLISH 2 EXISTING CAN LIGHTS AND SALVAGE PORTIONS OF THEIR RESPECTIVE EXISTING CEILING TILE FOR REUSE WHERE POSSIBLE. SEE ELECTRICAL.
18. CONTRACTOR TO DEMOLISH PORTIONS OF EXISTING CEILING TILE AS REQUIRED FOR PLACEMENT OF NEW WALLS TO 11'-0" ELEVATION AFF.
19. EXISTING FIRE SPRINKLER TO REMAIN. SEE MECHANICAL FIRE SPRINKLER.
20. CONTRACTOR TO REMOVE EXISTING FIRE SPRINKLER HEAD AND RELOCATE. SEE MECHANICAL FIRE SPRINKLER.
21. REPAIR 12"ø OPENING IN SHIELDED CEILING WHERE DUCT HAS BEEN REMOVED (2 PL). SEE SPECIFICATION SECTION 134900 AND ARCHITECTURAL PLAN ON H-3-317135, SHEET 1, FOR REPAIR INFORMATION.
22. DASHED LINE DENOTES THE APPROXIMATE EXTENT OF STRUCTURAL DEMOLITION ABOVE (BEHIND) THE SATC. SEE DETAILS 1 AND 2 ON H-3-314135, SHEET 3. ACTUAL AREA TO BE DEMOLISHED WILL BE AS DETERMINED BY THE GENERAL CONTRACTOR IN COMBINATION WITH THE SHIELDING SUBCONTRACTOR. SEE GENERAL NOTE 2 FOR ADDITIONAL CONSIDERATIONS.
23. CONTRACTOR TO REMOVE EXISTING POWER POLE AT THIS LOCATION. SEE ELECTRICAL.
24. EXISTING DOUBLE 10" STEEL JOISTS
25. EXISTING 16"ø DUCTS (2 PLACES)
26. EXISTING 10" STEEL JOISTS
27. W18X40 STEEL BEAMS ABOVE TO REMAIN. SEE GENERAL NOTE 2 ON THIS SHEET.
28. REMOVE EXISTING SHIELDING PLYWOOD BACKING AND SUPPORT JOISTS WITHIN AREA OF NEW RAISED CEILING AS SHOWN.
29. CUT AND REMOVE SECTIONS OF EXISTING JOISTS AS SHOWN AND SAVE FOR REUSE.
30. PROVIDE TEMPORARY POSTS AND CRIBBING FOR CUT JOISTS AND SHIELDING AS NEEDED (TYPICAL).
31. SALVAGE CHASE END PANEL AT THIS LOCATION FOR INSTALLATION AT END OF SALVAGED CASEWORK.

RELEASE 05-10-13 DATE JMK

EDP # S682648-EDP01

DRAWING NO	DRAWING TITLE
REFERENCE DRAWINGS	
NEXT USED ON	

RR	QA BY / DATE	ENGR BY / DATE	CHK BY / DATE	REV BY / DATE	DESCRIPTION	REV NO
REVISIONS						

DRAWN KS KOSCHIK/KJ COALY	DATE 3/13/13	U. S. DEPARTMENT OF ENERGY PACIFIC NORTHWEST SITE OFFICE
CHECKED		Pacific Northwest Division — Battelle — Richland, Washington 99352
ENGR KENNETH D LARSON KD LARSON	5-4-13	DEMOLITION LAB 1401 TEM FLOOR PLAN/RCP/DETAILS
APVD		
OTHER		
OTHER		PROJ TITLE
APVD FOR IMPLEMENTATION BY N/A ON WORKSHEETS		SIZE D · INDEX NO 0800 0801 1000 · BLDG NO 3410 · DWG NO WS10179 · REV NO 0 · SCALE SHOWN · SHEET 1 OF 5

PANL-D_R0_10/11

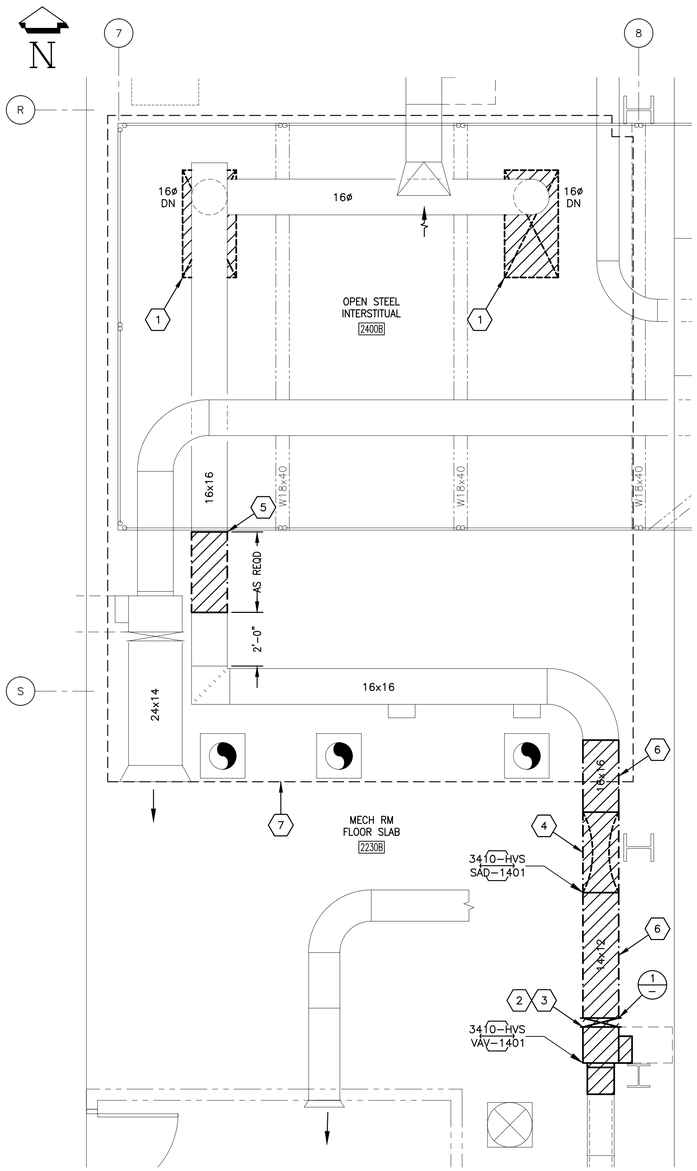

2ND FLOOR PLAN – MECH SUPPLY DEMO (AREA 3)

SCALE: 3/8" = 1'-0"

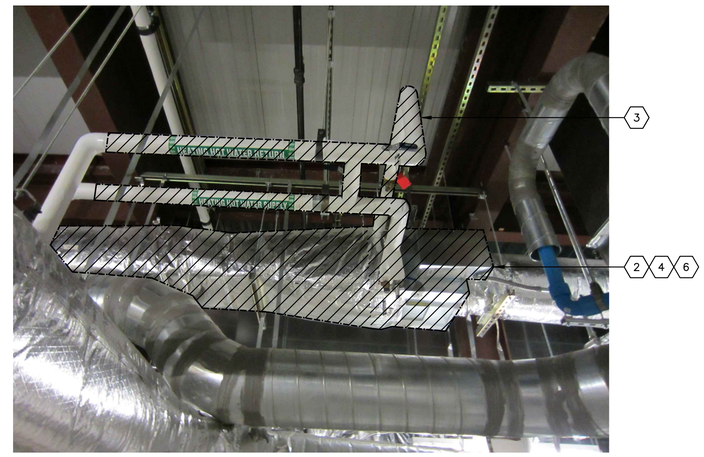

1 DETAIL @ VAV-1401 PHOTO

SCALE: NONE

SHEET NOTES

1. DEMOLISH EXISTING SUPPLY GRILLES IN LAB BELOW.
2. DEMOLISH EXISTING 3410-HVS-VAV-1401.
3. DEMOLISH EXISTING HHWS/HHWR PIPING FROM COIL AS SHOWN, PREPARE SHUT-OFF VALVES FOR REUSE.
4. DEMOLISH EXISTING SOUND ATTENUATOR AND PREPARE FOR REUSE.
5. REMOVE EXISTING PORTION OF SUPPLY DUCT NECESSARY FOR SOUND ATTENUATOR NEW LOCATION. SEE MECHANICAL H-3-317137, SHEET 2 FOR RELOCATION.
6. REMOVE EXISTING PORTIONS OF SUPPLY DUCT AS SHOWN.
7. EXISTING RM OUTLINE BELOW, SHOWN FOR REF ONLY.

RELEASE 05-10-13 DATE JMK

EDP # S682648-EDP01

DRAWN KS KOSCHIK	DATE 3/13/13	U. S. DEPARTMENT OF ENERGY PACIFIC NORTHWEST SITE OFFICE
CHECKED		Pacific Northwest Division — Battelle — Richland, Washington 99352
ENGR DAVE CREVIER DK CREVIER	5-8-13	DEMOLITION LAB 1401 TEM 2ND FL MECH SUPPLY PLAN
APVD		
OTHER		
OTHER		PROJ TITLE
APVD FOR IMPLEMENTATION BY N/A ON WORKSHEETS		SIZE D · INDEX NO 8900 · BLDG NO 3410 · DWG NO WS10179 · REV NO 0 · SCALE SHOWN · SHEET 2 OF 5

DRAWING NO	DRAWING TITLE
REFERENCE DRAWINGS	
NEXT USED ON	

RR	QA BY / DATE	ENGR BY / DATE	CHK BY / DATE	REV BY / DATE	DESCRIPTION	REV NO
REVISIONS						

PNNL-D_R0_10/11

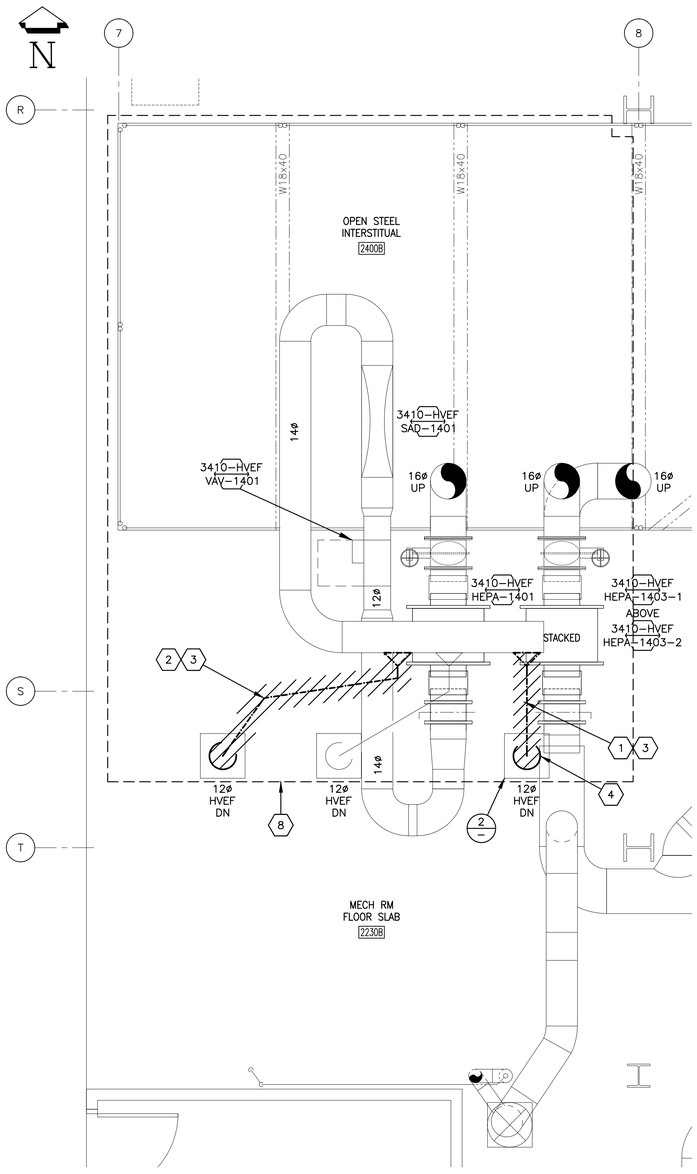

2ND FLOOR PLAN – MECH EXHAUST DEMO (AREA 3)

SCALE: 3/8" = 1'-0"

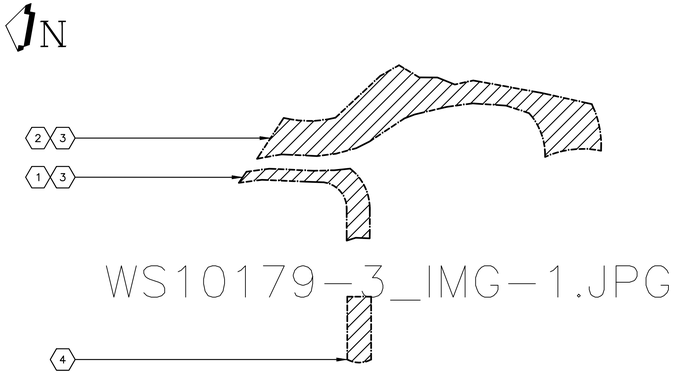

2 DETAIL @ EXHAUST PHOTO

SCALE: NONE

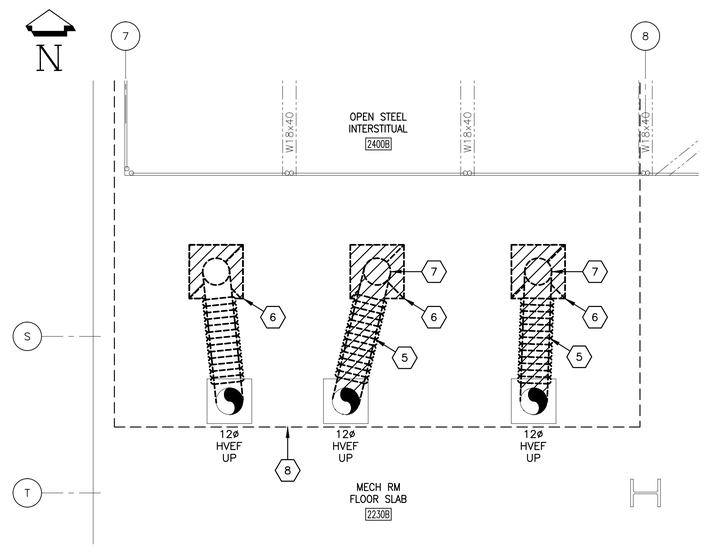

2ND FLOOR PLAN – MECH EXHAUST DEMO (BELOW SLAB)

SCALE: 3/8" = 1'-0"

SHEET NOTES

1. DEMOLISH EXISTING EXHAUST DUCT FROM MAIN BRANCH DOWN TO PENETRATION AT FLOOR.
2. DEMOLISH EXISTING EXHAUST DUCT FROM MAIN BRANCH TO LOCATION SHOWN.
3. CAP EXHAUST DUCT AT MAIN BRANCH.
4. CAP EXHAUST DUCT FLUSH WITH FLOOR AT SLAB PENETRATION.
5. DEMOLISH EXISTING FLEX DUCT BELOW FLOOR SLAB DOWN TO PENETRATION IN LAB.
6. REMOVE EXISTING EXHAUST GRILLES, PREPARE (1) FOR REUSE.
7. REPAIR OPENING IN SHIELDED CEILING WHERE REMOVED DUCT PENETRATION OCCURRED, 2 PL. SEE SPECIFICATIONS AND ARCHITECTURAL H-3-317135 FOR REPAIR INFORMATION.
8. EXISTING RM OUTLINE BELOW, SHOWN FOR REF ONLY.

RELEASE
05-10-13
DATE
JMK

EDP # S682648-EDP01

DRAWN	DATE
KS KOSCHIK	3/13/13
CHECKED	
ENGR DAVE CREVIER	
DK CREVIER	5-8-13
APVD	
OTHER	
OTHER	
APVD FOR IMPLEMENTATION BY	
N/A ON WORKSHEETS	

U. S. DEPARTMENT OF ENERGY
PACIFIC NORTHWEST SITE OFFICE

Pacific Northwest Division — Battelle — Richland, Washington 99352

DEMOLITION
LAB 1401 TEM
2ND FL MECH EXHAUST PLAN

PROJ TITLE				
SIZE	INDEX NO	BLDG NO	DWG NO	REV NO
D	8900	3410	WS10179	0
SCALE SHOWN				SHEET 3 OF 5

DRAWING NO	DRAWING TITLE
REFERENCE DRAWINGS	
NEXT USED ON	

RR	QA BY / DATE	ENGR BY / DATE	CHK BY / DATE	REV BY / DATE	DESCRIPTION	REV NO
REVISIONS						

PANL-D_R0_10/11

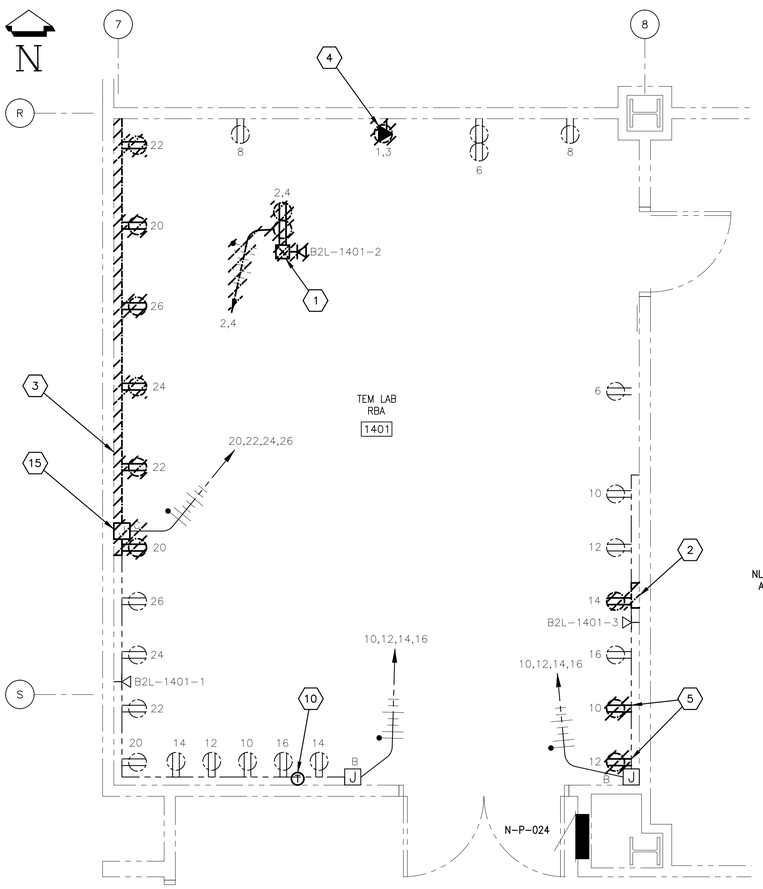

POWER PLAN – DEMOLITION (AREA 1a)

SCALE: 3/8" = 1'-0"

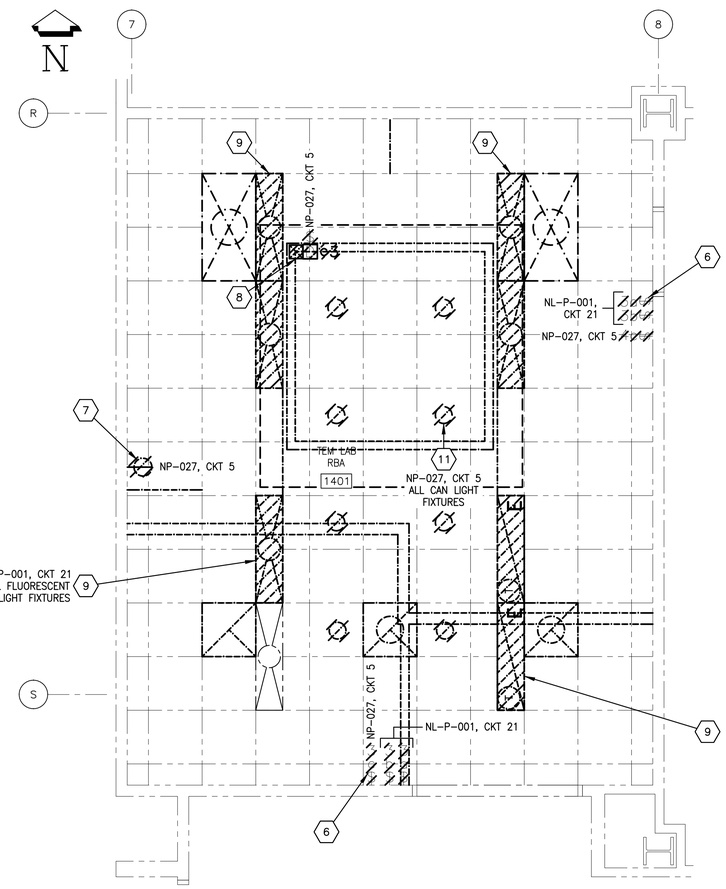

LIGHTING PLAN – DEMOLITION (AREA 1a)

SCALE: 3/8" = 1'-0"

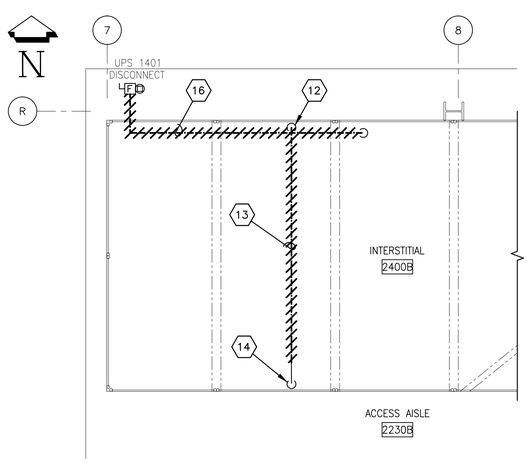

2ND FLOOR POWER PLAN – DEMOLITION (AREA 3)

SCALE: 1/4" = 1'-0"

SHEET NOTES

1. REMOVE POWER POLE WITH RECEPTACLES AND COMMUNICATIONS OUTLET. REMOVE ALL WIRING BACK TO PANELBOARD OR JUNCTION BOX (JB).
2. REMOVE SECTION OF WIREMOLD AND RECEPTACLE TO MAKE SPACE FOR NEW WALL. LEAVE REMAINING WIREMOLD WITH EXISTING OUTLETS. PULL WIRING BACK TO JB OR RECEPTACLES STILL IN SERVICE
3. REMOVE SECTION OF WIREMOLD AND RECEPTACLES. PULL WIRING BACK TO RECEPTACLES STILL IN SERVICE. RECEPTACLES ARE CONNECTED TO PANEL N-P-024.
4. REMOVE 60 AMP, 208V, SINGLE PHASE RECEPTACLE WALL MOUNTED ON NORTH WALL OF ROOM 1401. REMOVE ALL WIRE BACK TO PANEL N-P-024. LEAVE CONDUIT IN PLACE EXCEPT FOR SECTION THAT IS REMOVED FOR RAISED CEILING.
5. REMOVE RECEPTACLES FROM SMR. PROVIDE BLANK COVER. PULL WIRING BACK TO JB OR RECEPTACLES STILL IN SERVICE.
6. REMOVE LIGHT SWITCHES IN WALL. REMOVE WIRING BACK TO JB IN CEILING.
7. REMOVE SINGLE RECEPTACLE FOR CAN LIGHT DIMMING CIRCUIT. REMOVE ALL ASSOCIATED WIRING BACK TO JB IN CEILING. REMOVE SURFACE MOUNT CONDUIT.
8. REMOVE LIGHT SWITCH ON POWER POLE ASSOCIATED WITH THE CAN LIGHT DIMMING CIRCUIT.
9. REMOVE 7 FLUORESCENT LIGHT FIXTURES FROM CEILING. REMOVE CONDUITS WHERE NECESSARY FOR RAISED CEILING MODIFICATIONS. DISCONNECT FROM NL-P-001, CKT 21. REMOVE WIRING BACK TO JB IN CEILING. NL-P-001, CKT 21 IS ALSO CONNECTED TO RESTROOM, CORRIDOR, AND ELEVATOR EQUIPMENT ROOM LIGHTS. SAVE LIGHT FIXTURES FOR REUSE IN NEW LOCATION. FLUORESCENT LIGHTS ARE 277VAC. PANEL NL-P-001 IS LOCATED ON 2ND FLOOR ELECTRICAL ROOM 2504.
10. REMOVE JCI TEMPERATURE SENSOR/TRANSMITTER. REMOVE WIRE BACK TO JB, AND COIL UP TO BE REUSED.
11. REMOVE ALL CAN LIGHT FIXTURES FROM CEILING. DISCONNECT FROM NP-027, CKT 5. REMOVE CONDUITS WHERE NECESSARY FOR RAISED CEILING MODIFICATIONS. CAN LIGHT FIXTURES ARE 120VAC. REMOVE WIRING BACK TO JB IN CEILING. N-P-027, CKT 5 IS ALSO CONNECTED TO CANL IGHTS IN RM 1405. SAVE ALL FIXTURES FOR REUSE IN NEW LOCATION. PANEL N-P-027 IS LOCATED AT THE ENTRY TO ROOM 1405.
12. FIELD VERIFY CONDUIT IS USED FOR 208V POWER TO 60 AMP RECEPTACLE ON NORTH WALL OF RM 1401. FED BY PANEL N-P-024 CKT 1,3.
13. REMOVE SECTION OF CONDUIT AS NECESSARY TO ALLOW RAISED CEILING MODIFICATIONS.
14. CONDUIT TO N-P-024
15. VERIFY LOCATION OF HOMERUN CONDUIT ENTRY INTO SURFACE METAL RACEWAY. RELOCATE CONDUIT ENTRY INTO REMAINING SMR IF NECESSARY.
16. REMOVE EMPTY 1 1/4" CONDUIT CONNECTED TO UPS 1401 DISCONNECT FOR LOAD SIDE WIRING.

RELEASE
05-10-13
DATE
JMK

EDP # S682648-EDP01

DRAWN	DATE
KJ COALY	3/13/13
CHECKED	
ENGR AL MINTON / AL MINTON	5/7/13
APVD	
OTHER	
OTHER	
APVD FOR IMPLEMENTATION BY N/A ON WORKSHEETS	

U. S. DEPARTMENT OF ENERGY
PACIFIC NORTHWEST SITE OFFICE

Pacific Northwest Division — Battelle — Richland, Washington 99352

DEMOLITION
LAB 1401 TEM
POWER & LIGHTING PLANS

PROJ TITLE

SIZE	INDEX NO	BLDG NO	DWG NO	REV NO
D	7301 7401	3410	WS10179	0

SCALE SHOWN — SHEET 4 OF 5

DRAWING NO	DRAWING TITLE
REFERENCE DRAWINGS	
NEXT USED ON	

RR	QA BY / DATE	ENGR BY / DATE	CHK BY / DATE	REV BY / DATE	DESCRIPTION	REV NO
REVISIONS						

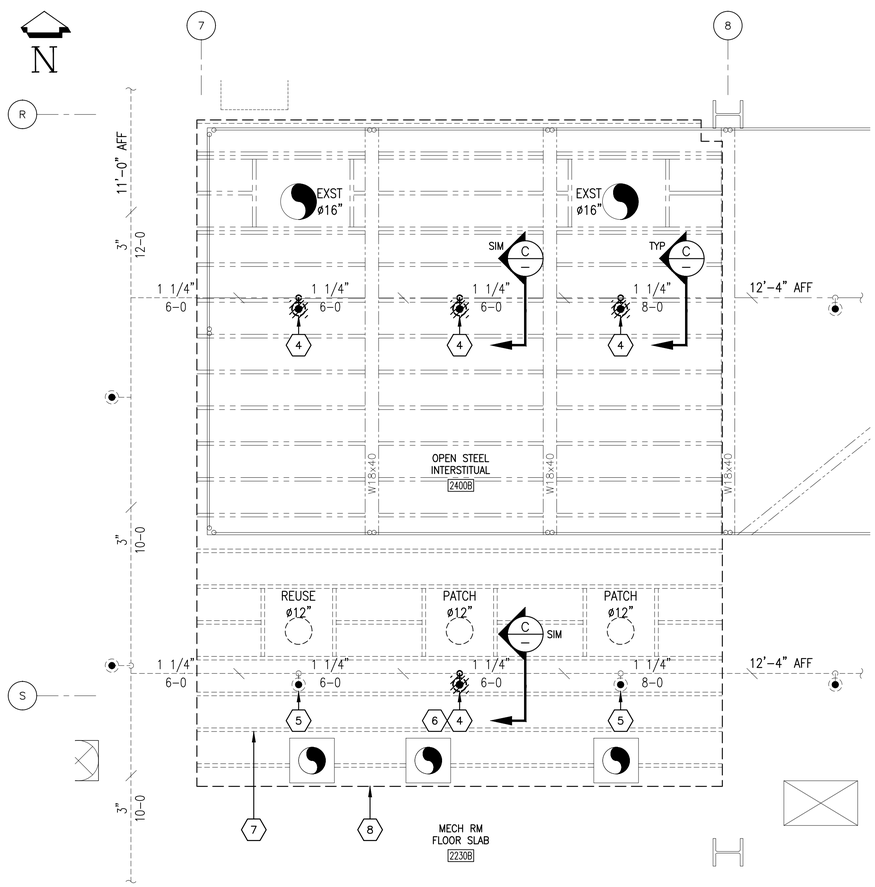

FIRE SPRINKLER PLAN – DEMOLITION (AREA 1a)

SCALE: 3/8" = 1'-0"

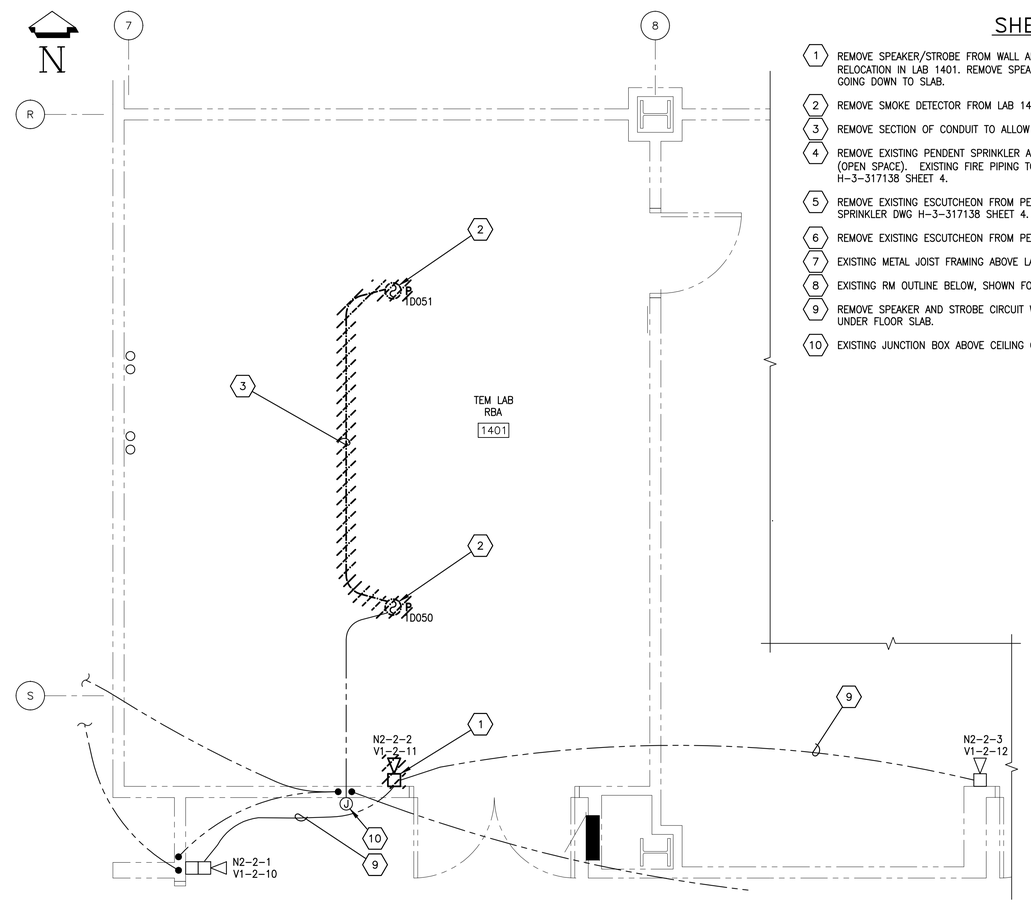

FIRE ALARM PLAN – DEMOLITION (AREA 1a)

SCALE: 3/8" = 1'-0"

SHEET NOTES

1. REMOVE SPEAKER/STROBE FROM WALL ADJACENT TO DOORWAY INTO LAB 1401. SAVE COMPONENTS FOR RELOCATION IN LAB 1401. REMOVE SPEAKER/STROBE BACK BOX. DISCONNECT BOX FROM TWO CONDUITS GOING DOWN TO SLAB.
2. REMOVE SMOKE DETECTOR FROM LAB 1401 CEILING. SAVE COMPONENTS FOR RELOCATION IN LAB 1401.
3. REMOVE SECTION OF CONDUIT TO ALLOW CEILING MODIFICATIONS ABOVE THE TEM. REMOVE WIRING BACK TO JB.
4. REMOVE EXISTING PENDENT SPRINKLER AND ARM-OVER PIPING LOCATED BETWEEN SHIELDED CEILING AND SATC (OPEN SPACE). EXISTING FIRE PIPING TO BE RE-ROUTED. SEE MECHANICAL FIRE SPRINKLER DWG H-3-317138 SHEET 4.
5. REMOVE EXISTING ESCUTCHEON FROM PENDENT SPRINKLER AND SAVE FOR REUSE. SEE MECHANICAL FIRE SPRINKLER DWG H-3-317138 SHEET 4.
6. REMOVE EXISTING ESCUTCHEON FROM PENDENT SPRINKLER.
7. EXISTING METAL JOIST FRAMING ABOVE LAB, SHOWN FOR REF ONLY.
8. EXISTING RM OUTLINE BELOW, SHOWN FOR REF ONLY.
9. REMOVE SPEAKER AND STROBE CIRCUIT WIRING BACK TO NEXT DEVICE. CONDUITS APPEAR TO BE ROUTED UNDER FLOOR SLAB.
10. EXISTING JUNCTION BOX ABOVE CEILING ON CORRIDOR SIDE FOR SMOKE DETECTOR SIGNAL LINE CIRCUIT.

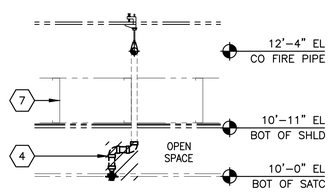

C SECT @ SPRINKLER

SCALE: 3/4" = 1'-0"

RELEASE 05-10-13 DATE JMK

EDP # S682648-EDP01

DRAWN KS KOSCHIK/KJ COALY	DATE 3/13/13	U. S. DEPARTMENT OF ENERGY PACIFIC NORTHWEST SITE OFFICE
CHECKED		Pacific Northwest Division — Battelle — Richland, Washington 99352
ENGR AL MINTON D CREVIER/AL MINTON	5/7/13	DEMOLITION LAB 1401 TEM FIRE SPRINKLER & ALARM PLANS
APVD		
OTHER		
OTHER		PROJ TITLE
APVD FOR IMPLEMENTATION BY N/A ON WORKSHEETS		SIZE D · INDEX NO 7701 8508 · BLDG NO 3410 · DWG NO WS10179 · REV NO 0 · SCALE SHOWN · SHEET 5 OF 5

DRAWING NO	DRAWING TITLE
REFERENCE DRAWINGS	
NEXT USED ON	

RR	QA BY / DATE	ENGR BY / DATE	CHK BY / DATE	REV BY / DATE	DESCRIPTION	REV NO
REVISIONS						

PNNL-D_R0_10/11

DRAFT

Job Planning Package Click the ? for online help

Service Request # S682648F	Facility: 3410	Location: 1401	Funding WP: P07357

Request Subject:	CM - 3410 Lab 1401 Mods
Description:	Modify existing TEMS Lab to accomodate the installation of new lab equipment. Work includes architectural wall, casework, ceiling modifications, rework of the RF Shield and structural support system to provide additional headroom for TEMS Lifting Device, HVAC supply and exhaust ductwork modifications, sound attenuator relocation, new VAV for airflow control, installation of new room heating/cooling coils, fire sprinkler piping and alarm system modifications, and electrical power and lighting changes. Lab 1401 air flow balancing and control is to be verified and documented. RF Shield measurements and testing is to be performed by the Contractor's Shielding Vendor and documented in a submitted report.
Justification:	Work is required to facilitate the installation of a new TEM Microscope by others (PNNL Research).
Equipment Category:	2
Systems Affected:	Piping-Chilled Water, Electrical Power, Hvac-Hv Controls, Piping-Heating Hot Water, Architectural, Architectural-Ceilings, Architectural-Doors, Architectural-Floors, Architectural-Furniture, Architectural-Locks/Keys, Architectural-Structural, Architectural-Walls, Electrical Power-Direct Power, Electrical Power-Emergency Lights, Hvac-Fmcs/Metasys, Hvac-Hv Exhaust, Hvac-Hv Supply

JPP Type, Hold Points and Comments

UseCategory	Reference
Contingency Emergency Plan Hold Point:	EMERGENCY The PNNL single-point-contact for emergencies is 375-2400. All injuries and accidents (e.g., personal, property, or equipment) shall be reported to your supervisor immediately and PNNL Construction Manager (CM), Gary Kelmel (371-7950/492-8075). Employees have the right and/or responsibility to STOP WORK without fear of reprisal, when convinced a situation exists that places themselves, coworkers, or the environment in danger. If this happens STOP work, put work in safe-condition, and notify your supervisor and PNNL CM immediately. See Building 3410 Emergency Information Posting (EIP) for Evacuation Routes and Emergency Staging Information
Additional Comments:	PNNL CONTACTS

Construction Manager (CM): Gary Kelmel 371-7950/492-8075
Project Manager (PM): Brian Greenaway 371-7963/551-8220
Safety & Health: Mark Deichman 371-7962/531-9441
PSF Building Manager (BM): Curt Nichols 371-6407
PSF Building Engineer (BE): Tom Haller 371-6027
PSF Fire Protection Engineer (FPE): Andy Minister 371-7902
Environmental Compliance Rep (ECR): Dan Edwards 371-7860
PSF Facility Services Rep (FSR): Justin Slone 371-7632
Radiological Engineer: Woody Buckner 371-7740
Radiological Protection Support Manager: Holly Black-Kania 371-6930/549-7283
PNNL Cognizant Space Manager: Danny Edwards 371-7284

GENERAL REQUIREMENTS

(A) General work activities will be performed Monday – Thursday, 6:00 am to 4:30 pm. Outages for facility connections may require contractor work after-hours or on weekends.

(B) Contractors shall submit an Access/Information/Isolation/Outage Request for access to buildings and/or equipment for isolation. Notify CM 5 working days in advance.

(C) A security badge is required when visiting or working on the PNNL Campus.

(D) Doors must not be left unlocked, unattended or blocked open without CM approval. Doors that are alarmed, or not customarily used, may require specific authorization and/or PNNL supervision. Provide a 5 day notice to arrange for PNNL supervision, keys and proximity badge access requests.

(E) Request authorization from the PNNL CM before the end of shift to access work areas, use storage and lay down areas, and perform work for the following day.

(F) All work is limited to that which is outlined in this JPP.

(G) Contractor retains responsibility for identifying specific construction-related hazards and preparing and maintaining an approved task-specific Job Safety Analysis (JSA).

(H) Alternate means of construction which are not identified in any of the planning documents will be subject to JPP, WEA, and JSA revisions as applicable, before these alternate means may proceed.

(I) Contractor shall maintain control of, and access to, the work area at all times. Contractor retains responsibility for planning, supervising and controlling the work.

	(J) Prior to entering posted Construction Areas employees shall be given a pre-job orientation, and shall read, understand, comply, & sign the site safety documentation (i.e., PNNL JPP, PNNL WEA, Contractor JSA, Fall Protection Plan, etc.)which shall be available, onsite, located within the yellow Job Box. (K) Contractor shall submit Material Safety Data Sheets (MSDS) to the CM for approval 5 days prior to bringing products onto the jobsite. Contractor will retain copies of each MSDS in a project file and have readily available at/near the job site. (L) All Regulated waste (e.g. epoxy, lead, mercury, rad, etc.) will be documented by the contractor, managed and coordinated by PNNL through the PSF Facilities Service Representative (FSR) in advance. Disposal of non-regulated waste (e.g., misc. construction debris, excess materials, etc.) shall be coordinated through the CM for recycle or disposal by the contractor. (M) Flammable liquids and gases used as part of this project shall be removed from the facility at the end each shift, unless approved by PNNL in advance. (N) Storage of chemicals is not allowed in the facility without prior approval from the Building Manager. (O) A PNNL Hot Work Permit is required when spark producing activities is required (i.e., welding, cutting, grinding or using open flame). Coordinate permit through the PNNL CM 5 days in advance. (P) Roadway access for emergency vehicles, fire hydrants, and all deliveries shall be maintained at all times unless specifically approved by the Building Manager. (Q) All temporary power cords shall be run overhead or protected to prevent damage and tripping hazards. Extension cords and power tools shall be GFCI protected. (R) Housekeeping is required periodically throughout the day and at the end of each shift. (S) If observed, Contractor will be required to spray mouse droppings, nesting material, and carcasses with 10% bleach and water. Contact CM for disposal. (T) At no time shall personnel reach into areas that contain energized parts or perform functions that require being exposed to energized parts. (Exception: Safe-to-Work checks or Diagnostics & Testing work performed under specific permit.)

Basis for Planning

Special Instructions:	RADIOLOGICAL PROVISIONS Lab 1401 and the adjacent cooridor are currently designated as a Radiation Buffer Area (RBA). It is intended to downpost Lab 1401, move any radiation source materials in adjacent Lab 1403 to the east (far) side of the lab, have the Construction Contractor install a temporary air barrier wall across Corridor 1280B and access the work area from the west personnel corridor 1280. The temporary wall is to be located per PNNL CM direction so as not to exceed 50' travel distance from the wall to the east corridor exit and retain access to the east emergency eyewash and safety shower. The interstial area above the acoustical and RF Shield ceiling is to be tented with a temporary air barrier prior to cutting the RF Shield and plywood/structural metal joist support system to retain building HVAC air control between the a101 Lab Space and the 2nd floor Mechanical area air space. A Radiation Work Permit (RWP) is not required for this work. Dosimetry & PNNL GERT training is required for entry into the RBA. In addition, workers performing hands-on activities in an RBA are required to have Radiation Worker 2 (RW 2) training. Employees are required to exit an RBA via PCM/Hand Foot Counter. Prior to the start of any HVAC demolition work on the HVE Exhaust ductwork, A PNNL Radiation Protection Technican (RPT) must survey the interior of the duct. Schedule with the CM 5 days prior to work being performed.

Work

Operating Requirements to communicate to Contractor	Yes	Specify Requirements	The contractor will schedule outages with the PNNL CM 5 days in advance. Outage work may be required during off-shift hours. Building 3410 Emergency Information Posting (EIP)

Other Design Basis Documents:	Yes
Specific Design Information:	FMP # S682648 EDP-01 R0 FMP-01 R0

	DRAWINGS H-3-317134 Sh 1-6 WS10179 Sh 1-5 H-3-317135 Sh 1-3 H-3-317136 Sh 1 H-3-317137 Sh 1-4 H-3-317138 Sh 1-4 H-3-317139 Sh 1-3 H-3-317140 Sh 1 [See Contract for complete list]

Work to be Performed By:	Off-site Contractor		

Lock and Tag Requirements

Personal, Controlling Organization, Written Instructions	Instructions: (A) Employees that participate in, or enter into a boundary that is controlled by lockout/tag out (LOTO), shall be trained as Authorized Workers. Approved equivalency will require contractors to attend the PNNL GAP training. (B) NOTE: Written instructions, if applicable, must be formalized by using the PNNL F&O Lockout Tagout Written Instructions Form. (C) A lockbox may be used in situations where other methods are cumbersome, unsafe or infeasible. In this situation, key(s) for the Controlling Organization (CO) locking device(s) are secured in the lockbox by the authorized worker using his/her "GREEN" Authorized Worker lock and DNO tag. Items placed in a lockbox are not limited to keys; other items may be used (e.g., valve handles, fuses, etc.) to control isolating devices. PNNL & AUTHORIZED WORKER PROTOCOL: (D) PNNL Controlling Organization (CO) applies their DANGER - Do Not Operate LOTO(s) being first-on. The CO allows the Contractor's Authorized Workers to "watch the meter fall" in preparation to over-lock. The authorized worker then over-locks the Controlling Organization using his/her (Green) lock with a PNNL approved tag (LOTO). The authorized worker then follows the Energized Electrical Work Permit instructions, followed by the safe-to-work check. Upon completion of the work activities the worker(s) shall remove their LOTO and notify their supervisor and CM.

	When notified the LOTO evolution and/or work activities are complete and the authorized workers (AW) locks and tags are removed, the CM will notify the CO to remove their locks and tags being last-off. (E) Configuration of building equipment and system's will be performed by the Controlling Organization (CO)/PNNL operations personnel. The (CO) shall be notified prior to, and after completion of LOTO, through the CM. ENERGIZED ELECTRICAL WORK: All energized electrical safe-to-work checks, diagnostic and testing greater than 50 volts shall be performed under an Energized Electrical Work Permit (EEWP) and must be coordinated, through the CM 5 days in advance.

Permits and Plans

Blind Penetration Permit - Class II (link), Electrical Worker Qualification Form, Energized Electrical Work Permit (link), Functional Test, Hot Work Permit, Job Safety Analysis, Leak Pressure Test Report, Lockout Tagout Written Instruction Form, Outage Required, Work Place Exposure Assessment

Other permits:

Job Site Prep

Documented Pre-job Meeting	Yes	
Barriers	Yes	Barriers will be placed around construction areas. Install signs and barriers to keep non-construction personnel from entering the construction area. Use caution tape, barriers, cones, etc., as needed to re-direct foot and vehicle traffic away from construction area.
Communication Eqpt	Yes	Contractor shall have cell phones available for emergency notifications/communication.
Postings	Yes	All construction areas shall be posted with a Construction Area sign. Post activities and specific hazards as necessary (e.g., energized work, overhead work, chemicals etc.).
Other	Yes	PNNL CESH Manual PNNL JPP PNNL WEA PNNL Hot Work Permit, as applicable PNNL Energized Electrical Work Permit(EEWP), as applicable Contractor JSA

Personnel Requirements

Special Training Requirements	Yes	GERT (Course 817), Hot Work Fire Watch Training (Course 679), Hot Work Permit Training (Course 988), Initial Security Briefing for Non-Staff (Course 3014), Journeyman Electrician, Lock & Tag - Authorized Worker (Course 692), Rad Worker II

Special Medical Exams	No	

Part Procurement

Special Material Used:	None
Material Provided By Customer:	Yes
Materials Needed:	PNNL will provide replacement acoustical ceiling tiles as required. PNNL will provide the Chiller unit, the UPS and the UPS Breakout panel for the contractor installation. All other material is to be supplied by contractor
Consumables:	None

Work Activity

Step #	Potential Hazards/Control Methods
	Define Work Activity
1	None Specified
	PRE-JOB REQUIREMENTS (A) Documented pre-job meeting shall be held with contractor's supervisors conducted by the CM to review the scope of work, the JPP, WEA and the contractor's JSA. Pre-job meetings shall be conducted as necessary during this project such that all construction personnel (including PNNL staff) receive information specific to the operational and safety aspects of the work that they will be performing as well as other ongoing work within the construction zone. (B) The contractor will conduct daily pre-job meetings with workers to review the planned daily work and cover any safety-related items associated with the work. (C) Contractor will hold a documented weekly safety meeting. The meeting sign-in roster, identified deficiencies, and mitigating actions will be maintained by the contractor with the project records. (D) In addition to documented pre-job meetings, the contractor's supervisor shall meet with the CM each day to review the day's activities and discuss safety-related issues.
2	None Specified
	MOBILIZATION Mobilize Contractor personnel and equipment to designated staging area. Contact the CM in advance for location.
	None Specified

3	**HALLWAYS AND ACCESS** The contractor shall ensure that safe access pathways between work locations are maintained for PNNL staff. Access routes shall be identified as needed to ensure staff does not enter construction locations. Contractor recognizes that construction will occur in an active facility and special precautions are needed to reduce co-mingling of hazards and personnel. Building air balance and control is essential to facility operation and can be adversely impacted by construction activities. The Contractor shall request permission from Building Management prior to using Service Corridor rollup doors, and shall not open or block open Lab corridor doors while rollup doors are open.
4	None Specified
	AS-FOUND CONDITION Contractor shall repair to as-found condition all surfaces damaged during construction, at no cost to PNNL.
5	None Specified
	ELEVATOR USE Contractor may use the *Equipment Elevator* for transporting materials, tools, and equipment between floors. Contractor may not use personnel elevators. Contact CM / Bldg Mgr for access keys.
6	None Specified
	OUTAGE SCHEDULING The Contractor shall submit an (Access/Information/Isolation/Outage Request Form) for access to the building, and equipment and/or system isolation. Notify the CM 5 working days in advance for access, isolation or outages.
7	Exposed electrical energy >50v / Energized Electrical Work Permit
	ENERGIZED ELECTRICAL WORK All Energized electrical work shall be performed under an Energized Electrical Work Permit (EEWP) and must be coordinated thru the CM 5 days in advance. Energized electrical work includes "Safe-to-Work" checks and "Diagnostic and Testing". Electrical circuits are considered "Energized" until tested.
8	Blind Penetration-Class 1 / Blind Penetration requirements - Class 1 Blind Penetration-Class 2 / Blind Penetration Permit - Class 2
	BLIND PENETRATIONS (A) Contractor will notify the CM prior to any/all blind penetrations.

	(B) All penetrations are classified as Class I or Class II. A permit is required for all Class II penetrations and must be coordinated through the CM 5 days in advance. Blind penetrations shall be performed per PNNL CESH Manual.
9	None Specified
	DEMOLITION --- GENERAL (A) Notify the CM 5 days prior to starting selective demolition activities. Perform all demolition activities per contract Drawings. (B) All property numbers, tags, valve tags etc. will be removed from demolished components & provided to the CM prior to disposal. (C) All items removed during selective demolition will be staged in a pre-determined area for further release and disposition by PNNL. Following release by RPT, ductwork/metal debris will be sent to recycle by the contractor. (C) Properly dispose of construction scrap, waste & debris per PNNL FSR. (D) Contractor is to coordinate architectural, mechanical, electrical, and fire protection/detection demolition work in steps 11 thru 14. .
10	Loss of Air balance / Ventilation requirements
	DEMOLITION HOLD POINT: Prior to start of demolition work which which breaches the integity of the Room 1401 Lab ceiling space, (i.e. Cutting the room ceiling RF Shielding, plywood, and structural support metal joists), install temporary air barrier wall in corridor 1280B and a temporary air barrier at the interstital floor opening between 1st floor and 2nd floor over Lab 1401 per PNNL Bldg Mgr and Safety/Fire Protection Engr requirements to Maintain air balance and RBA integrity between Lab space and Interstitial Space at Mechanical level. Material for temporary walls/barriers shall be of fire resistive construction. Maintain access to emergency shower and eyewash per PNNL direction.
	Combustible materials / Per Contractors JSA Falls from elevations > 6 ft. / Per Contractors JSA Welding cutting grinding / Per Contractors JSA Dust / Cleaning/vacuuming Welding cutting grinding / Welding cutting & grinding permits Work from Ladder / Per Contractors JSA
	DEMOLITION --- ARCHITECTURAL (A) Perform demolition in accordance with Drawings WS 10179 Sh 1 and specifications. (B) Coordinate extent of removal of shielded ceiling structure with Shielding Subcontractor.

11	Temporary methods to support partially removed structural "C" joist shield support system are to be reviewed by PNNL/CM prior to start of Demo. (C) Relocate and store lab casework and ceiling components to be re-used at area designated and approved by CM and Building Engr. (D) Methods for cutting metal joist system and metal shield system are to minimize production of sparks. Coordinate with Hot Work Permit, Safety and Fire Protection. (E) The contractor shall control dust to the greatest extent practicable and may be required to install a fire retardant dust barrier as required by the CM. Do not tape exit doors to the door frame. Where necessary for dust control, install fire retardant plastic over the door and tape the plastic to the door frame.
12	Radiological / RPT Survey Falls from elevations > 6 ft. / Fall Protection Work Plan Power Tools / Per Contractors JSA Welding cutting grinding / Per Contractors JSA Welding cutting grinding / Welding cutting & grinding permits Pressure systems / Lock and tag Pressure systems / Outage Required Work from Ladder / Per Contractors JSA
	DEMOLITION ---MECHANICAL (A) Perform mechanical demolition in accordance with Drawings WS 10179 Sheets 2, 3, and specifications. (B) RADIOLOGICAL HOLD POINT: Survey interior of HVE Exhaust duct to be removed prior to start of Duct Demo in accordance with RPT direction. (C)Perform Mech Demo work under LO/TO on the following systems: HVAC HVS Supply to Room 1401 HVAC HVE Exhaust to Room 1401 Chilled Water Supply and Return Heating Hot Water Supply and Return FMCS/Metasis Controls for Rm 1401
13	Exposed electrical energy >50v / Energized Electrical Work Permit Exposed electrical energy >50v / Lock and tag Falls from elevations > 6 ft. / Fall Protection Work Plan Power Tools / Per Contractors JSA Blind Penetration-Class 2 / Blind Penetration Permit - Class 2 Work from Ladder / Per Contractors JSA
	DEMOLITION ---ELECTRICAL POWER AND LIGHTING (A) Perform electrical power and lighting demolition in accordance with Drawings WS 10179 Sh

	4, and specifications. (B) Perform Electrical Demo work under LO/TO on the following systems: Receptacle power Rm 1401 Normal and Emergency Lighting power to Room 1401
14	Falls from elevations > 6 ft. / Fall Protection Work Plan Work from Ladder / Per Contractors JSA Power Tools / Per Contractors JSA Pressure systems / Lock and tag active alarm system / Lock and tag
	DEMOLITION ---FIRE SPRINKLER AND ALARM (A) Perform fire sprinkler system and alarm/detection demolition in accordance with Drawings WS 10179 Sh 5, and specifications. (B) Perform fire protection system piping demo and modifications under system outage and LO/TO. Coordinate with Bldg Mgr and Fire Protection Engr. (C) Perform fire detection and smoke detector demolition and modification work under system outage and LO/TO Coordinate with Bldg Mgr and Fire Protection Engr.
15	Blind Penetration-Class 2 / Blind Penetration Permit - Class 2 Falls from elevations > 6 ft. / Per Contractors JSA Work from Ladder / Per Contractors JSA Power Tools / Per Contractors JSA Dust / Per Contractors JSA Paint Fumes / Per Contractors JSA
	Architectural Installation: (A) Construct new metal stud walls, structural ceiling modifications, doors, casework modifications, and architectural work in accordance with Drawings H-3-317135 SH 1-3, and H-3-317136 SH 1. (B) Coordinate drywall tape and finish work and painting activities with PNNL CM and Bldg Mgr to control dust and paint fumes.
	Falls from elevations > 6 ft. / Per Contractors JSA Manual Lifting / Per Contractors JSA Power Tools / Per Contractors JSA Pressure systems / Lock and tag Welding cutting grinding / Welding cutting & grinding permits Blind Penetration-Class 2 / Blind Penetration Permit - Class 2 Temp. <32 F>90 F / Lock and tag
	Mechanical Installation:

16	(A) Construct new mechanical work in accordance with Drawings H-3-317137 SH 1-4, and H-3-317138 SH 1-4. (B) Install new heating and cooling coils and associated ductwork. Install new VAV and relocate sound attenuator and supply and exhaust ductwork modifications per drawings. (C) Notify CM 24 hrs in advance to schedule isolation of HHWS/R lines. (D) Install new CHWS/R, Condensate Drains, HHWS/R and hangers per contract drawings & specifications. CAUTION: Fall Hazards & Blind Penetrations exist. Compliance with Fall Protection Work Plan and Blind Penetration requirements is mandatory. (E) Perform & document pressure tests on new systems per contract drawings & specifications. Leaks shall be repaired and re-tested until system successfully passes the acceptance criteria; submit test documentation to CM. (F) Perform & document in-service leak tests of tie-ins per project drawings & specifications; submit test documentation to CM. (G) Seal wall penetrations; install firestopping @ all penetrations through fire-rated barriers, per project drawings & specifications.
17	Falls from elevations > 6 ft. / Per Contractors JSA Work from Ladder / Per Contractors JSA Overhead hazards / Per Contractors JSA
	INSULATION & LABELING (A) Following successful testing of each piping & duct system, insulate & label per project drawings & specifications.
	Exposed electrical energy >50v / Energized Electrical Work Permit Exposed electrical energy >50v / Lock and tag Falls from elevations > 6 ft. / Per Contractors JSA Work from Ladder / Per Contractors JSA Power Tools / Per Contractors JSA Blind Penetration-Class 2 / Blind Penetration Permit - Class 2
	Electrical Installation: (A) Construct new electrical power, lighting, and fire detection work in accordance with

18	Drawings H-3-317139 SH 1-3, and H-3-317140 SH 1. (B) Notify CM to coordinate CO LOTO for connecting to energized electrical systems and panelborads, final terminations, and NEC acceptance inspection scheduling. NOTE: Prior to concealing elements AND prior to energizing, electrical work must be inspected for NEC code compliance by an inspector. (C) Following de-energization & CO LOTO, AW verify zero energy (per EEWP, when applicable) and install AW LOTO, per PNNL procedure; complete required terminations per project drawings & specifications; return all components to a safe configuration. NOTES: 1) LOTO shall remain in place on all affected circuits until final NEC inspection has been performed. 2) In the event electrical installations are not acceptable, Contractor shall rework to meet code at no cost to PNNL. (D) Upon final NEC acceptance, remove LOTO & notify CM when complete. (E) Submit new or modified panel directories to the CM. Do not mark on the original directory; make photocopy & mark all changes on the photocopy -- keeping marked up copy at the panel. (F) Seal wall penetrations & install firestopping @ all penetrations through fire-rated barriers, per project drawings & specifications.
19	Exposed electrical energy >50v / Energized Electrical Work Permit Exposed electrical energy >50v / Lock and tag Work from Ladder / Per Contractors JSA Falls from elevations > 6 ft. / Per Contractors JSA
	DATA (METASYS SYSTEM) WIRING NOTE: Contractor shall coordinate all METASYS work thru CM and work with PNNL technicians as required for proper installation. (A) Install new METASYS control conduit/wiring per project drawings and specifications. (B) Work on/near power feeds @ Metasys panels shall be performed per PNNL LOTO procedures.
20	Exposed electrical energy >50v / Energized Electrical Work Permit Falls from elevations > 6 ft. / Per Contractors JSA Work from Ladder / Per Contractors JSA
	HVAC System Test and Balance: Coordinate HVAC and hydronic system balancing for Room 1401 with PNNL CM and Building Engr 5 days in advance. Submit results of testing and balancing to PNNL CM
	None Specified

21	RF Shield Testing: Contractor to have FMS Shielding subcontractor perform testing to document the new modified RF shielding system meets requirements. Submit test results and certification to PNNL CM.
22	None Specified
	ACCEPTANCE OF WORK (A) Acceptance of work is contingent upon Contractor completing all incomplete/discrepant work identified on the Exceptions List during the final walk-down. (B) Perform final housekeeping to as-found condition. (C) Complete *Acceptance of Completed Work (ACW)* form.

Approvals

APPROVAL BLOCK MAY NOT BE PRINTED FOR SIGNATURE - REQUEST STILL IN PLANNING.

3410 Rm 1401 IOPS.pdf WEA for 3410 Rm 1401 TEMS Mods.pdf

Battelle *The Business of Innovation*	**Workplace Exposure Assessment**	Industrial Hygiene Case #: 8679-IH	
		Date: 05/03/13	Page: 1 of 3
		X Initial Survey	Re-Survey ☐ Other

Area: PSF	Project Title: 3410 Lab 1401 TEM	Organization: F&O	IH: Mark Deichman
Bldg.: 3410	Project #: N/A	SR #: S682648	Phone: 371-7962/531-9441
Floor: 1401 & Mech rm.	Room: 1401 & Mechanical Level	Work Package# P07357	Email: Mark.Deichman@pnnl.gov

Facility/Project and Operation: Describe the facility, work area, and process/operation being evaluated.

Modify existing TEMS Lab to accommodate the installation of new lab equipment. Work includes architectural wall, casework, ceiling modifications, rework of the RF Shield and structural support system to provide additional headroom for TEMS Lifting Device, HVAC supply and exhaust ductwork modifications, sound attenuator relocation, new VAV for airflow control, installation of new room heating/cooling coils, fire sprinkler piping and alarm system modifications, and electrical power and lighting changes. Lab 1401 air flow balancing and control is to be verified and documented. RF Shield measurements and testing is to be performed by the Contractor's Shielding Vendor and documented in a submitted report.

Work will be released through the PSF core team plan of the day meeting. Work will be performed in accordance with design drawings and specifications.

The contractor will be responsible for creating a job safety analysis (JSA) defining those hazards to workers expected to be encountered during the course of this work. Also, there is a potential that unexpected hazards may be encountered or the nature of the known hazards might change as work activities precede. Should this occur the JSA shall be amended to incorporate the new hazards/conditions and communicated with affected employees.

Preliminary Hazard Assessment: Inventory chemical, physical, biological, and ergonomic stressors or attach PHA form.

Employees will be exposed to eye injury, hand injury, ladders, falls, overhead obstructions/hazards (2nd floor), Hot Work, electrical, material handling, pinch points, power tools, chemicals (duct seal, paints, caulking, etc) , noise, strains/sprains, awkward positions (kneeling, reaching, & bending), radiological,

Potentially Exposed Work Force: Define the potentially exposed workforce

Sub-contractor employees.

Risk Assessment: Perform risk assessment. Attach sampling plan if quantitative monitoring is required.

No monitoring shall be conducted.

Hazard Controls: List and describe required engineering controls, administrative controls, and personal protective equipment

Training – The contractor shall be fully responsible for orienting employees to potential workplace hazards and providing each employee with the necessary training to safely complete their work assignment. All training shall be documented

Welding Cutting and Grinding - Obtain a Hot Work Permit from PNNL prior to performing any hot work (welding, soldering, grinding, spark producing, or open flame activities).

Unexpected release of an energy source - Follow PNNL lockout and tagout program. All workers must be trained to PNNL's lockout and tagout program. Hazardous energy sources are considered electrical, mechanical, pneumatic, thermal, hydraulic, & hazardous materials.

Noise – Cutting of ductwork using grinder or sawzall will require the use of hearing protection and Face Shield.

Electrical – Follow PNNL's lockout and tagout program. Safe to work checks shall be performed under an EEWP released by PNNL. Employees shall be required to wear PPE as identified within the EEWP when disconnecting/breaking neutral conductors (i.e. receptacles, lights, panel board, & switchgear neutrals).

Falls - Contractor shall submit a fall protection work plan or a detailed JSA with required elements to PNNL for review prior to commencing elevated work. Designate competent person for this activity.

Chemical Products (i.e. paints, caulking, epoxy, etc) - In order to ensure chemical safety in the workplace, information must be available about the identities and hazards of the chemicals. All products must have labels and MSDS to convey the hazard information. The JSA shall identify the safe method and PPE required to handle these products. Contractor shall notify the PNNL CM 1 day prior to using chemicals within PNNL facilities. The notification is needed to alert chemical sensitive staff members within 3410. The PNNL CM shall work with building management to adjust the building fresh air and exhaust to dilute possibly chemical vapors.

Signs & Barricades - Contractor is required to maintain control of their work zone by the use of signs and barricades. Signs shall be used with barricades to identify the hazard within the barricaded area.

Radiological – Follow radiological requirements identified by RWP's, postings and signs.

Commissioning Activities – Commissioning activities shall be coordinated with PNNL's CM (Gary Kelmel). All systems and system boundaries shall be walkdown prior to testing systems or system components. Signs shall be placed to provide warnings of equipment startups and alert staff and non-staff who could be working within a system, near, or on. (i.e. supply air system and exhaust/return system). These systems have the potential to cause the startled effect.

Ladders - INSPECT ALL LADDERS PRIOR TO USE. USE ONLY LADDERS APPROPRIATE FOR WORK BEING PERFORMED. ALL LADDERS FOUND TO HAVE DEFECTS SHALL BE TAGGED OUT OF SERVICE. LADDERS SHALL BE USED AND MAINTAINED IN A SAFETY MANNER. EMPLOYEES SHALL BE TRAINED BY A COMPETENT PERSON IN THE FOLLOWING AREAS:
(i) The nature of fall hazards in the work area;
(ii) The correct procedures for erecting, maintaining, and disassembling the fall protection systems to be used;
(iii) The proper construction, use, placement, and care in handling of all stairways and ladders;
(iv) The maximum intended load-carrying capacities of ladders used. TRAINING SHALL BE DOCUMENTED ON THE TRAINING ATTENDANCE RECORD

Hand, power tools and cords: Verify that the tools are in a safe operating condition and are equipped with guards, are either double-insulated-approved or grounded, and use the tool according to the manufacturer's recommendations. All damaged or defective tools, cords, equipment shall be tagged and removed from the job site. Power tools will be de-energized (unplugged/battery pulled/etc.) prior to changing blades, bits, etc. Arrange workspace to allow for adequate clearance to protect against potential injury such, as pinch points or kickback. All electrical tools and cords shall be GFCI protected

Sharp objects, pinch points: Construction activities, especially demolition and removal work have the potential of creating sharp edges and pinch points. Disassembly will be done in a controlled and coordinated manner to safely reduce these potential hazards. Never stick hands beneath or in-front of a heavy moving load. Gloves shall be worn during the handling of metal objects (i.e. metal stud, duct work, demolition activities or working around sharp objects)

Dust, debris, housekeeping: Maintain good housekeeping and lighting to reduce hazards. General housekeeping shall be performed at the end of of each shift daily to prevent additional workplace hazards. Equipment and supplies shall be staged to prevent hazard to worker and building staff. Floors, walls, working surface, and passageway shall be kept free of materials, hardware, disassembled items, or similar hazards. Hoses and electrical cords across aisles or passageways shall be covered or suspended overhead so that there is no tripping hazard. Be prepared to wipe-up, clean-up (pads. litter, etc.) any spilled materials during this task.

Equipment/Material Staging: Contractors will be mindful of equipment clearances and ensure equipment/material is not staged in a manner that blocks or impedes access to emergency exits, fire pulls, safety showers, and/or electrical equipment. Material and Equipment staging will be coordinated through the CM and staged in a manner that does not allow for displacement.

Breaching of Duct work - Below are a list of the current Chemical Process Permits (CPP's) in use at the 3410 building. Most of the CPP's are in support of metallurgical or stress /fatigue testing. Most of the CPP's are placeholders and not used on any consistent frequency. The chemistries which are being practiced are not emissions generating, rather swabs, etching, and polishing done within a vacuum chamber condition. Under these conditions no free solute would enter the air stream (duct work). Any VOC and semi-volatiles; acetone, ethanol, methanol, and hexane have a short resident life time in the ventilation system. There may be small quantities of metals an acid salts, but their usage is in mLs and plate out at dead regions of the vent systems. A discussion was held with Justin Stone/FSR and waste volumes from this facility is minimal, <25L/year mostly water.

Skin protection is adequate; nitriles under leather gloves or PVC coated glove while cutting the ductwork. An inspection of the inner duct work wall for staining, potting, etc, has been performed to support the EMSL Radiological Capabilities Project. During the use of grinder to cut ductwork a face shield must be worn, hot permit, and appropriate gloves listed above.

3410-1400-CPP-12346	rev. 2	Aqueous Boron Acid and Lithium Hydroxide Usage	Current
3410-1402-CPP-12408	rev. 1	1402 Chemical Process Permit	Current
3410-1405-CPP-12573	rev. 2	Use of Solvents and Silver Paint	Current
3410-1500-CPP-12915	rev. 2	Under-Sodium Viewing Testing	Current
3410-1302-CPP-12960	rev. 3	Polishing and Etching of metallography samples	Current
3410-1302-CPP-12961	rev. 2	Ultasonic and Ethanol or Acetone cleaning of samples	Current
3410-1302-CPP-12962	rev. 3	Preparation and polishing of samples of Cadmium Zinc Teluride and Cadmium Arsenic Glass	Current
3410-1302-CPP-12971	rev. 3	Addendum of chemicals to 3410-1302-CPP -12960	Current
3410-1404-CPP-13267	rev. 1	Cleaning of optics and small test specimens and degreasing of oily equipment.	Current
3410-1500-CPP-13548	rev. 1	Micro and NanoSphere Monolayer Fabrication	Current
3410-1300-1304-1305-CPP-13589	rev. 1	Cleaning of optics and small test specimens and degreasing of oily equipment.	Current
3410-1403-CPP-13686	rev. 1	1403 Electropolishing Chemical Process Permit	Current
3410-1401-CPP-13901	rev. 1	Use of Solvents	Current
3410-1403-CPP-13961	rev. 1	Ultrasonic cleaning of samples in Ethanol, Methanol, or Acetone	Current
3410-1403-CPP-13963	rev. 1	Etching of metallography samples	Current
3410-1403-CPP-13965	rev. 1	Met Sample Preparation (ie. cutting, potting, and polishing)	Current
3410-1500-CPP-14428	rev. 1	Anti-Adhesion Coatings	Current
3410-1500-CPP-14429	rev. 1	Micro and NanoSphere Monolayer Coatings	Current
3410-1407-CPP-14509	rev. 1	Corrosion sample studies	Current
3410-1402-CPP-14549	rev. 1	Oxygen Sensitive Microscopy Sample Preparation	Current
3410-1500-CPP-14552	rev. 1	General Solvents Usage	Current
3410-1500-CPP-15004	rev. 1	Mixing of Nanomaterials	Current
3410-1602-CPP-15157	rev. 1	Sample Analysis	Current
3410-1600-CPP-15159	rev. 1	Sample Analysis	Current

Reevaluation Frequency: Mark the appropriate reevaluation frequency N/A

☐ Reevaluate annually (High Hazard)	☐ Reevaluate every two years (Moderate Hazard)	☐ Reevaluate every four years (Low Hazard)

Survey Performed by (Last Name, First Name, MI) Deichman, Mark, L	Signature M. L. Deichman	Date 5/3/13

Hazard Awareness Summary for 3410 1401

Add to Shortcuts

Printer-Friendly Page My Archived Items

BUILDING/ROOM 3410 1401
Workspace Title: TEM
Last Modified by Danny J. Edwards
Last Reviewed 09/11/2012 by Danny J. Edwards

This is an IOPS space. Users must complete all required training prior to unescorted entry.

To verify your access to this space, check your IOPS Active/Passive Access Report.

If you currently do not have unescorted access and need it, please request access via the IOPS tool. If you need assistance, contact the Cognizant Space Manager or delegate listed below.

	Name	Work Ph	Off-Hours Ph
Workspace Owner:	Chad L. Painter	509/372-4112	
Cognizant Space Manager:	Danny J. Edwards	509/371-7284	509/380-0605
Delegate:	Matthew J. Olszta	509/371-7217	509/619-2075
CSM Immediate Manager:	Charles H. Henager	509/371-7295	
Building Manager:	Curtis J. Nichols	509/371-6407	509/375-1563 (control room)
S&H Representative:	Renee B. McGaughy	509/375-2971	509/546-1783
S&H Representative:	Donald G. Quilici	509/372-4466	509/554-3191

In case of emergency, call 375-2400 for assistance.

Hazards Described in this Summary

- Chemical Hazards
- Compressed Gases
- Cryogens
- Exposed Energized Electrical Hazards
- Fissionable Materials - Isolated Facility
- Portable Ladders
- Radioactive Materials

Routine Operating Envelope

This document establishes the routine operating envelope for this workspace. Research activities described in this Hazard Awareness Summary, identified permits, procedures, and projects may be performed by staff members with authorized active access using established practices. Staff proposing new activities must discuss their research with the CSM to obtain approval prior to initiation.

Activities conducted in this workspace include:

Routine operation of JEOL 2010F transmission electron microscope (TEM). Load 3-mm TEM discs into non-rad specimen holders for examination in TEM. Load radioactive 3-TEM discs in RMA loading area. Fill LN2 dewer for EDS detector 3 times per week. Fill LN2 dewer for cold trap on microscope column when using TEM. Imaging using Gatan CCD Cameras and Gatan computer systems. Acquire compositional data using Oxford EDS detector and INCA computer system. Transfer of radioactive materials between RMA and storage in another labspace (1403) as needed. Technology Demonstrations and Tours for Clients and Other Visitors. Routine house cleaning, arranging of equipment, inventory of specimens and equipment as needed.

General Information

Before unescorted access is allowed to this workspace, you are required to read and

Before unescorted access is allowed to this workspace, you are required to read and understand this hazard awareness summary (HAS), all associated reading requirements marked by a [ ], and to complete all required formal training. Upon reading this HAS, from the on-line IOPS tool, your training record will be updated.

This hazard awareness summary addresses the hazards resulting from the presence of and interactions with equipment, systems, and/or research activities located in this space.

Controls for mitigating the identified hazards, including the appropriate personal protective equipment (PPE), are identified in the work controls, practices, or activity permits (i.e., chemical process permit, CPP) appropriate to the hazard.

Equipment or systems may only be used by individuals designated as active with the hazards specific to the equipment or systems.

Questions about this HAS may be addressed to the CSM. Safety & Health questions may be addressed to your S&H Representative.

Links to HDI (How Do I?) are provided as references (optional reading) to more detailed information.

Annotations:
This lab space will be for examining TEM discs of non-radioactive and radioactive (but non-dispersible) materials only. Storage of radioactive samples is not permitted for more than the duration of the examination. Users must be trained by appropriate staff before they are allowed access to the instrument on their own.

Instrument maintenance is taken care of by either JEOL staff as part of an existing service contract or by specific technical staff at Battelle.

Work Controls:
[C] Basic Laboratory and Operations Practices

Operating Procedures:
PSF Equipment Commissioning
PSF Radiological Material Inventory Tracking and Limits
Research Work Authorization

Chemical Hazards

Hazardous chemicals are present in this space. Chemicals are assessed according to their chemical properties and health and physical hazards, and placed into one of three hazard chemical levels (HCL-1, HCL-2, and HCL-3), with HCL-3 representing the highest hazard. For more information, see the *Classification and Management of Hazard Chemical Levels* exhibit in the HDI Chemical - General Work Control. Controls, including PPE, for mitigating the hazards to an acceptable level of risk are as follows:

HCL-1

1. **Perform work in accordance with the Chemical - General and Basic Laboratory and Operations Practices HDI Work Controls.**
2. **At a minimum, staff must use personal protective equipment (PPE) such as safety glasses and gloves. For additional information on gloves, see the *Gloves for Use with Chemicals* exhibit in the HDI Chemical - General Work Control. For assistance in gloves selection, contact the Safety & Health (S&H) Representative.**

HCL-2

1. **Use all practices as described in HCL-1 mitigating controls.**
2. **Use engineered and administrative controls and PPE (e.g., enclosures, ventilation, labeling, MSDS, goggles, face shield, etc.).**
3. **When chemicals are not in use, segregate and store incompatibles in chemical storage cabinets.**
4. **Available eyewash and safety shower.**

HCL-3 - Mitigating controls will be described in the Chemical Process Permit(s) applicable to this space.

this space.

Material Safety Data Sheets (MSDS) that describe the hazards of each chemical can also be found using "Other Tools" from the IOPS homepage.

Annotations:
The only chemicals used in this lab space are solvents such as acetone, methanol, isopropanol and ethanol for cleaning the insides of the high voltage and emission tanks, and the inside of the microscope during repairs or maintenance. The chemicals are stored either inside a small flammable storage cabinet located in the lab or in 1403.

There are limited quantities of vacuum pump oil that are stored temporarily until they are ready for disposal.

Chemical Process Permit:
3410-1401-CPP-13901 (Revision: 1) Use of Solvents

Work Controls:
Chemical - General

Radioactive Materials

Radioactive materials are being stored or used in this space. Controls, including PPE, for mitigating the associated hazards to an acceptable level of risk are described in the Radiological Work Permit(s) (RWP) and/or the appropriate technical work documentation applicable to this space, and in the HDI *Radiological - General* work control.

Annotations:
This instrument is operated as a non-contaminated instrument. Radioactive materials are examined in this microscope, but they cannot be dispersible materials.

Work Controls:
Radiological - General

Fissionable Materials - Isolated Facility

This workspace is located within a Physical Sciences Facility controlled area where fissionable materials may be stored or in use. Limits and controls for mitigating the criticality hazards are described in the posted Criticality Safety Specification (CSS). Direct any questions to the Fissionable Material Supervisor identified on the CSS and the entrance to the building laboratory workspace.

Unescorted access to the building laboratory workspace requires Fissionable Material Hazard Awareness training. Any movement or handling of fissionable material into, out of, or within this workspace must be conducted by or performed under the direct control of a certified Fissionable Material Worker.

Annotations:
Chuck Henager (1-7295)is the Fissionable Materials Supervisor for the 3410 building, Ruby Ermi (1-7179)is the primary Materials Balance Area custodian and Mike Dahl (1-6735) is the alternate Materials Balance Area custodian. All work with fissionable materials needs to be coordinated with Chuck Henager and one of the MBA custodians to ensure that the limits for working with fissionable quantities are not exceeded. In addition, any reflector materials such as Be metal needs to be accounted for by the FMS and MBA custodians.

HDI Reference(s):
Fissionable Materials

Cryogens

Cryogenic materials are stored or used within this space. Controls, including PPE, for mitigating the associated hazards to an acceptable level of risk are described in the HDI Cryogenic Materials and Systems work control. Surfaces of equipment used for transferring cryogens may be very cold and may pose a burn hazard if touched.

Annotations:
LN2 is used to fill the dewer on the Oxford detector and the cold trap. The detector is filled on a routine basis by crafts, the cold trap is filled by the user on an as needed basis.

Compressed Gases

Compressed gases are present in this space. Controls for mitigating the associated hazards to an acceptable level of risk are described in the Chemical Process Permit(s) applicable to this space or the HDI *Compressed Gases and Systems* work control. Directions for acquiring and using compressed gases are in the Compressed Gases and Systems work control.

Annotations:
Dry nitrogen and SF6 are in the lab. The dry nitrogen is used to vent the microscope, the SF6 is used only by JEOL service people when working on the high tension tank, emission tank, and/or the electron gun. SF6 is a heavier than air gas and precautions must be taken when using it in a closed airspace with no ventilation.

Exposed Energized Electrical Hazards

This space contains exposed energized electrical hazards. There are unguarded or uninsulated components that present a danger of shock, arc flash burn, thermal burn, or blast if inadvertently contacted. Controls, including PPE and training, for protecting workers from these hazards are described in the HDI work control *Electrical Components and Systems* or the Energized Electrical Work Permit(s) associated with this space.

Annotations:
Exposed energized electrical hazards only exist during specific repair/maintenance operations conducted by JEOL service engineers. These procedures are first approved by Bobby Sparks or the appropriate SME before the work is started, and may require the presence of a PNNL staff member with the appropriate training.

Energized Electrical Work Permit:
3410-1401-EEWP-13399 (Revision: 2) Medium Risk Diagnostics and Testing

Work Controls:
Electrical Work Practices
Electrical Components and Systems

Portable Ladders

This space has at least one portable ladder (a ladder that can be readily moved or carried) with four or more rungs/steps. Controls for mitigating this hazard to an acceptable level of risk are provided in Course 1980 Portable Ladder Safety Training and identified in the HDI Work Control "Elevated Work and Fall Hazards".

Annotations:
A step ladder is used to access the liquid nitrogen dewars attached to the EDS x-ray detectors.

Work Controls:
Elevated Work and Fall Hazards

Activities Occuring in this Space

User Proposals

- Proposal #44687 - Reactivity of iron-bearing phyllosilicates with uranium and chromium through redox transitions zones
- Proposal #46904 - Focused ion beam (FIB) preparation of transmission electron microscope (TEM) specimens of oxide dispersion strengthened
- Proposal #47414 - Interactions between Functionalized Graphene and Electrochemically Active Materials in Advanced Energy Storage System

EPR Projects

- Project #13784 - Advanced Materials Development
- Project #56909 - Crack-Tip Mechanisms Driving Environmental Degradation
- Project #58593 - Nanolayered, self-healing radiation shielding foils
- Project #58883 - Uranium Alloy Metal Fuel for LWRs

- Project #60871 - TEM Metallurgy for EPRI
- Project #62729 - Nanocrystalline SiC and Ti3SiC2 alloys for Reactor Materials
- Project #63452 - 48997 - ENVIRONMENT-ASSISTED CRACKING MECHANISMS

F&O Administrative Procedure

ADM-CM-064

Equipment Identification and Labeling Requirements

Revision #	12
Revision Date	12/1/2012
Procedure Owner:	DM Brown
Author:	DM Brown
Approval:	Chief Engineer, DM Brown
Concurrence:	Facility Operations & Engineering Division, SS Allen Nuclear and Material Operations Division, PJ Crane Projects & Engineering Division, J Cruz FM M&OP, TM Graham
Work Location:	All PNNL Facilities
Identified Hazards:	N/A *See Section 4.0*
SES/USQ Reviewer:	TA Campbell
Applicable to RPL ONLY:	RPL-2012-430S
Use Category:	Reference Use

Unless stamped and numbered as a Controlled Copy, the online version is the official version of this procedure. Before using a printed copy, verify that it is the most current version by checking the revision number and effective date against an official copy.

Approval History for: ADM-CM-064_R12, Equipment Identification and Labeling Requirements

Final Process State: APPROVED

Name	Activity Name	Date
✔ Cruz, Joe	Review Concurrence 4	11/27/2012 8:52:15 AM
✔ Crane, Paul J	Review Concurrence 3	11/29/2012 9:42:43 AM
✔ Allen, Scott S	Review Concurrence 2	11/29/2012 2:18:33 PM
✔ Graham, Tonia M	Review Concurrence 1	12/6/2012 7:43:09 AM
✔ Brown, David M	Review Approval 1	12/6/2012 7:59:33 AM
✔ Campbell, Teresa A	Independent Review Chair Screener Approval	12/6/2012 2:59:04 PM

*** All actions are stored digitally and viewable at https://approvals.pnl.gov/ProcessView.aspx?pid=1199729**

Contents

1.0 Purpose and/or Scope 4
2.0 Applicability 4
3.0 Definitions 4
4.0 Hazard Assessment and Mitigation Summary 4
5.0 Prerequisite Actions 4
6.0 Precautions and Limitations 4
7.0 General Description and Work Instructions 4
8.0 References and Source Requirements 12
9.0 Attachments 12
Procedure Revision History 29

Unless stamped and numbered as a Controlled Copy, the online version is the official version of this procedure. Before using a printed copy, verify that it is the most current version by checking the revision number and effective date against an official copy.

1.0 Purpose and/or Scope

This procedure provides the standard for equipment identification and labeling requirements to enable staff to positively identify facility systems and equipment for labeling.

2.0 Applicability

This procedure applies to labeling of architectural, mechanical, electrical, and structural systems at facilities operated by Pacific Northwest National Laboratory (PNNL).

Background Information: Before May 2001, there have been several component identification-labeling conventions used at PNNL. This procedure defines current labeling conventions and combines those conventions that were previously established.

3.0 Definitions

None

4.0 Hazard Assessment and Mitigation Summary

Hazard Assessment	Mitigation
N/A	• N/A

5.0 Prerequisite Actions

None

6.0 Precautions and Limitations

None

7.0 General Description and Work Instructions

This procedure specifies the labeling requirements that apply to maintenance, new construction, and significant reconfigurations of existing systems.

It is recognized that component field labeling conventions of the past (including those developed under the Essential Drawings Program) do not conform to the new standards in this procedure.

To minimize confusion that could arise from the wholesale re-labeling of systems or components the existing field labeling conventions are accepted for continued application (e.g., existing field labeling and colors are ***"grandfathered"*** into acceptance).

The long-range goal at PNNL is to seek standardization of labeling across buildings and systems. The Building Engineer/System Engineer (BE/SE) should evaluate existing field labeling and determine ***WHEN*** and under what circumstances re-labeling of these "***grandfathered"*** systems as per this procedure would be appropriate.

7.1 Importance of Component Identification

The importance of component identification and labeling program in Facilities & Operations (F&O) is to standardize the process and to instill compliance at every working level. F&O staff should use current facility drawings as appropriate to identify various

Unless stamped and numbered as a Controlled Copy, the online version is the official version of this procedure. Before using a printed copy, verify that it is the most current version by checking the revision number and effective date against an official copy.

components, systems, and nomenclatures for identification and labeling. These drawings should enable staff to clearly identify components required in the operation of a facility.

Effective component identification and labeling should enhance a facility's operation, aid in quick and accurate response to emergencies, and help facilitate training.

7.1.1 Component Identification

Components t shall have a unique asset number that includes the building reference, the system acronym, component acronym, and a component identification number (i.e., 331-HVE-F-004).

> **Note:** For consistency, the equipment identification and labeling of *LEGACY* systems will remain the same (i.e., not to be re-numbered or re-labeled), continuing as established in previous labeling convention. When a new system is installed, the facility should follow the numbering and labeling convention as defined within this procedure.

7.1.2 Labeling is applied via a Graded Approach at PNNL

The following components should be considered to receive unique Asset Numbers:

- Equipment that requires preventative maintenance or periodic surveillance (i.e. chillers, boilers, -80 freezers, roof top units, safety showers, emergency lights, fire rated doors/walls, fume hoods, post indicator valves, etc.)
- Most devices that are manipulated in a Standard Operating Procedure (valves, pumps, fans, etc.)
- Devices that may require inclusion on a written lock and tag procedure. Most of the valves on piping systems that requires single or double isolation due to high or low temperature operation should be assigned asset numbers; such as isolation valves across steam coils or boilers. All major electrical components such as switchgear, main circuit breakers, tie-breakers, motor control centers, distribution panels, and lighting panels should have asset numbers.
- Major building components requiring replacement prior to the end of the buildings life to enable tracking of deferred maintenance and budget forecasting of component replacement. (Motors, drinking fountains, toilet exhaust fans, coils in air handling units, variable frequency drives, fans, pumps, large control valves, large operated dampers, etc.)

The following components normally do not receive unique Asset Numbers:

- Research equipment that is not part of the preventative maintenance program
- Individual molded case breakers in lighting or local distribution panels (these are tracked at the panel schedule)
- Electrical disconnects and individual buckets in motor control centers
- Sensors for building control systems (i.e. temperature sensors, humidity sensors, differential pressure sensors, etc.)

Unless stamped and numbered as a Controlled Copy, the online version is the official version of this procedure. Before using a printed copy, verify that it is the most current version by checking the revision number and effective date against an official copy.

- Terminal unit heating hot water or chilled water coils, isolation valves, control valves and automatic flow control valves (doesn't include steam terminal units)
- Plumbing fixtures (i.e. water closets, urinals, lavatories, faucets, etc.)
- Receptacles, non-emergency lighting fixtures
- Gas bottles and Dewar's
- Vehicles
- End of service valves in laboratories
- Building foundation and structural components that can be expected to last the entire life of the building.

To provide budget forecasting for building components that will fail and require replacement prior to the whole building being demolished. The following components normally should be included on a <u>general</u> Asset Number:

- Piping and components not captured with a unique Asset Number (i.e. Pipe and Fittings, 8" Steel, 8 K Ln Ft; Flow Control Valve, Motorized, 1/2", 45 each). In most cases copper, cast iron and plastic piping can be relied on to last the life of the building and would not require an asset number, but valves and other components of these systems may need to be captured.
- Water closets, urinals, lavatories, faucets
- Flooring, painting, windows, non-fire rated interior doors, exterior doors and roofing
- Building non-emergency light fixtures

7.1.3 Computerized Maintenance Management System (CMMS)

PNNL uses a CMMS for scheduling preventive maintenance, tracking maintenance histories, to monitor maintenance costs, and managing work orders. The CMMS software being used is MAXIMO. MAXIMO is the database for all equipment identification (EQID) numbers. The EQID numbers entered in MAXIMO shall follow the unique equipment numbering system identified in this procedure and subsequently labeled on equipment in the field.

Equipment identification numbers are not based on the Uniformat numbering hierarchy used in ASTM-E1557. The cross-reference of equipment identified in MARS should be captured in the Uniformat fields of Maximo. The Maximo location field is a composite of the building or area acronym and a "system identifier" (ARCH, ELEC HVAC, MECH, PIPE, or R&D). These should not be confused with the System Acronyms used in this procedure.

7.2 Label Information

A label should provide a concise, meaningful verbal description or function of the item being identified and a unique alphanumeric code identifying the system and component, as shown in Section 7.3, Figure 1.1, and Section 7.4, Figure 1.2. Component names and alphanumeric codes used on labels shall be consistent with those used in all facility procedures, round sheets, alignment checklists, engineering drawings, and piping and

Unless stamped and numbered as a Controlled Copy, the online version is the official version of this procedure. Before using a printed copy, verify that it is the most current version by checking the revision number and effective date against an official copy.

instrument diagrams (i.e., 3020-CHW-CH-001 has a label noun description of "**Centrifugal Water chiller #1"** which also is used in the Maximo equipment description field).

Information on control panel labels should be consistent with the information on labels attached to the equipment being controlled. Alphanumeric codes should aid staff in consistently identifying the correct component and prevent misidentification.

> **Note:** Abbreviations and acronyms used on labels should come from the list of approved systems and components abbreviations and acronyms contained within this procedure.

All permanent equipment labeling should meet the following minimum requirements:

- Labels should be made from materials compatible with their applicable environment.
- Each component label should list unique component numbers.
- Abbreviations and nomenclature should be standardized.
- Labels should be consistent with facility key drawings.
- Labels should be permanent and securely attached.
- Labels should be distinguishable and easy to read.
- If color-coding is used, the colors should be applied consistently (see Section 7.10, Systems Acronym List).
- Piping should be labeled to indicate the fluid contained and the normal flow direction.

7.3 Label Scheme for System Components Requiring Labeling

The standard labeling scheme for system components uses an alphanumeric system identifier followed by a numeric component number, followed by an alphabetic component descriptor. For example, a moisture separator in the compressed air system would be labeled as follows:

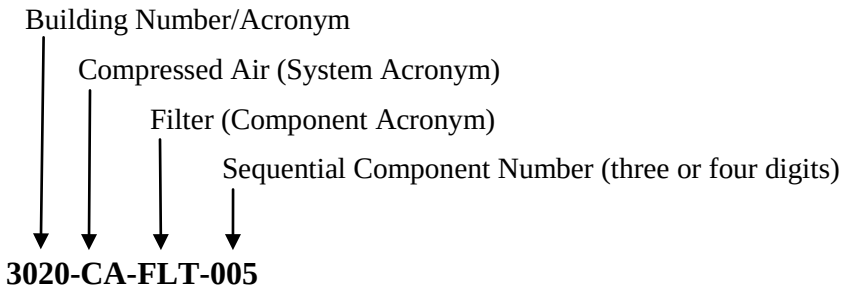

Figure 1.1 *– System Components*

This scheme provides information about the system and component type. This scheme is simple and easy to use. It is concise enough to be included on a simplified drawing and can be easily written into a procedure.

7.4 Label Scheme for Electrical Components

The standard labeling scheme for electrical components uses the same labeling scheme described in Section 7.3, except it is necessary to provide the power source and voltage

Unless stamped and numbered as a Controlled Copy, the online version is the official version of this procedure. Before using a printed copy, verify that it is the most current version by checking the revision number and effective date against an official copy.

levels for electrical components. For example, a standby powered motor control center at EMSL would be labeled as follows.

Building Number/Acronym
Standby Power (System Acronym)
Motor Control Center (Component Acronym)
Sequential Component Number (three or four digits)

3020-S-MCC-005

Fed From: S-2-FD ← Power Source Information
480 VAC/ 3ø Phase ← Voltage Information

Figure 1.2 *- Standby power motor control center*

7.5 Arc Flash Labeling

The standard labeling scheme for arc flash for electrical components identified in SBMS should include the following information, at a minimum.

a. Minimum Arc Flash Labeling

- Warning Arc Flash Hazard, Appropriate PPE required. Failure to comply can result in death or injury.

b. Calculated Arc Flash Label

- Warning or Danger label
- Flash Protection Boundary
- Hazard Risk Category
- Incident Energy Range (cal/cm^2)
- Working Distance (inches or feet)

c. Calculated Arc Flash Label with Additional Information

All information for b (above) plus any of the optional information listed below:

- Personal Protection Equipment (PPE)
- Arc/Equipment Type
- Arcing Fault in Protective Device
- Bolted Short Circuit Fault
- PPE Clothing Class
- Rated Volts
- Rated Amps
- Main Device Description, Frame Size, Plug Description, Sensor Description, Device Settings
- Arcing Duration

Unless stamped and numbered as a Controlled Copy, the online version is the official version of this procedure. Before using a printed copy, verify that it is the most current version by checking the revision number and effective date against an official copy.

- Trip/Delay time
- Breaker Open Time
- Bus Description

7.6 Label Scheme for Piping

In addition to labeling mechanical components, it is necessary to label piping with the system name and flow arrows. Piping labels with arrows are required for identification of piping systems in the following areas:

- Near valves or flanges
- Adjacent to changes in direction and branches
- On both sides of a penetration or a barrier (where pipes pass through walls/floors)
- At intervals on straight pipe runs sufficient for identification.

7.7 Control Panel Labeling

In addition to the label, posting guideline above, it is necessary to observe several unique label placements/installation requirements for control panel components.

- Labels should be placed closest to the switch or component they are identifying.
- Labels should be positioned above or below the components, they are identifying.
- Label placement should not interfere with equipment operation or obscure indicators.
- Label characters should be large enough to read at an arms-length distance.

7.8 Replacing Labels

The Operator or maintenance staff should identify and report all lost or damage labels during their normal building tours and other preventive maintenance activities.

The BE/SE should verify that misplaced, damaged, or lost labels are replaced in a reasonable amount of time.

Note: The operator and maintenance staff should become especially observant for situations where an unauthorized black marking pen has been used for labeling (and then sometimes crossed-out and relabeled). Those labels should be replaced with the proper labels.

The attachment of temporary and/or replacement labels to correct components should be verified by using a graded approach method.

- Missing or damaged labels should be replaced in a timely fashion.
- If a temporary label is utilized on a system, it must be tracked for installation and removal for input in permanent labeling system prior to completion of the work activity.
- Temporary labels should be used until permanent labels can be attached in a timely fashion.

Unless stamped and numbered as a Controlled Copy, the online version is the official version of this procedure. Before using a printed copy, verify that it is the most current version by checking the revision number and effective date against an official copy.

> **Note:** Temporary labels will: 1) contain the same information as permanent labels; 2) are adequate to survive in the environment it is applied; and 3) be tracked for replacement with a permanent label/tag.

7.9 Label Installation

Compliance should be adhered to when placing or affixing a permanent label to a component system or nomenclature.

Labels should be installed in the following way(s):

> **Note:** Screws or metal wire should not be used to attach labels if they could possibly come in contact with energized electrical components. Labels on electrical equipment or control panels should be attached with double-backed tape only.

- On or near the component being identified.
- Attached directly to the component using either self-adhering labels or self-adhering attached to metal backing with screws, wire, double-backed tape, or other fastener. Labels should be mounted in a manner that will verify they will remain permanently and securely fastened and will not be removed by motion of the component.
- Permanently (i.e., attached to valve yoke, not to a removable part such as the hand wheel) in a way that will not interfere with normal use or testing of the component.
- An additional label should be installed at the operating device on valves operated by reach rods or chains, or other remotely operated components.
- The text of all labels should be readable from left to right. When required, labels can be read vertically from the top down.
- Labels should be clearly visible to operating and maintenance personnel from normal work positions.

7.10 Responsibilities

- The BE/SE should use a graded approach when field labeling has to be verified for existing systems and components for their assigned facilities, and when gathering the required data for each component. This information should be maintained in the CMMS database.
- For projects the following responsibilities apply:
  - The Project Manager and/or Design Engineer will verify what components will be removed by the project and inform the BE/SE as to which component asset numbers can be reused for newly installed components. In addition, the Project Manager will contact Property Management regarding the components being removed. The Project Manager is responsible for making sure that all components removed has had any labels removed.

> **Note:** Asset management is covered under the HDI Workflow "Manage Stewardship of Equipment and Materials." This workflow guides staff through the paperwork process associated with adding or removing a property item from the property system.

Unless stamped and numbered as a Controlled Copy, the online version is the official version of this procedure. Before using a printed copy, verify that it is the most current version by checking the revision number and effective date against an official copy.

- The Design Engineer will provide to the BE/SE a list of new components to be installed by the project. The BE/SE will then in turn provide the Design Engineer the applicable asset numbers in a timely manner. The asset numbers should be included in the design package for the Facility Review Board process, if possible.
- As part of the project closeout activities, the Project Manager is responsible for making sure that all components installed has the labels installed, if the asset numbers were provided by the BE/SE. If no asset numbers were provided, the project can be closed out and the responsibility for labeling the new components falls to the BE/SE. The BE/SE shall make sure the CMMS database has been updated to reflect these changes.

7.11 Systems Acronym List

Note: When a new acronym is requested, the requestor shall contact the Chief Engineer to maintain consistency and configuration management.

The list is intended to be all-inclusive.

- System Acronym: The preferred identifier for a system to be used.
- Other Legacy Acronym: An identifier that may appear on the item in the field or in documents to describe the system. Usually, this is an existing condition where a system has been previously labeled to another standard. Continued use of the existing label should only be used where it is justifiable.
- Specialty Gas (XX): XX indicates the number applied to the gas distribution system. The label does not indicate the type of gas being distributed. Use of the system should have temporary labels at each end or branch that identifies the connected gas type.
- Supply or Return: Include in the system description as being Supply (S) or Return (R) to further identify portions of the system as being the supply or return respectively. Example: FO(S), Supply (S) is added to the fuel oil system.

7.12 Label Description Sheet

Requests to make and install permanent labels should be initiated by submitting a service request. In order to verify the correct information is printed on the label and the label is attached to the correct component, additional information must also be submitted with the service request. A label description and instruction sheet (Attachment 1) provides the information needed to make the label.

Note: Key drawings should be provided that have the components clearly marked. This will verify that the components are located and the correct label is installed.

The label description and installation sheet should be completed as follows:

1. Determine the color scheme for the system in accordance with the requirements in this procedure and American Society of Mechanical Engineers, ASME A13.1-2007. The color scheme shall remain consistent for all components within this system.

Unless stamped and numbered as a Controlled Copy, the online version is the official version of this procedure. Before using a printed copy, verify that it is the most current version by checking the revision number and effective date against an official copy.

2. Determine the dimensions for the field label in accordance with this procedure. The 1" wide label should be used on small components such as valves, gages, strainers, etc. The 4" wide label should be selected for large components such as pumps, receivers, fans, etc.
3. Determine the method of installation based on the physical nature of the component. Stick-on installation should be used if the component has a flat mounting surface. If the component has an uneven surface, then a metal-backed label should be made and fastened with a wire tie.
4. Note special installation instructions in the Notes section.
5. Select the appropriate component template from the two provided:
    a. The small template is used to label smaller components.
    b. The large template should be used to label larger components.

    If the large template is selected:

    a. Record component name (i.e., Building Supply Fan #1)
    b. Record electrical feeding equipment after *Fed From,* if applicable.
    c. Record bar code for equipment.

8.0 References and Source Requirements

DOE-STD-1044-93, Change Notice #1, Guide to Good Practices for Equipment and Piping Labeling DOE O 422.1, *Conduct of Operations,* Attachment 2, Appendix A

HDI Workflow, *Manage Stewardship of Equipment & Materials*

ASME A13.1-2007, *Scheme for the Identification of Piping Systems*

9.0 Attachments

Attachment 1 – Label Description and Installation Sheet

Attachment 2 – System Acronyms Quick Reference (sorted in alphabetical order by System Acronym)

Attachment 3 – Systems Acronyms Quick Reference (sorted in alphabetical order by Type)

Attachment 4 – Component Acronyms Quick Reference (sorted in alphabetical order by Type)

Attachment 5 – Component Acronyms Quick Reference (sorted in alphabetical order by Acronym)

Attachment 6 – Labels for Liquid Waste Disposal Systems

Unless stamped and numbered as a Controlled Copy, the online version is the official version of this procedure. Before using a printed copy, verify that it is the most current version by checking the revision number and effective date against an official copy.

Attachment 1 – Label Description and Installation Sheet

<table>
<tr><th colspan="3">Label Description Sheet</th></tr>
<tr><td colspan="2">Label Color:</td><td rowspan="2">Dimensions:
❑ 1” X 3 ½” [Small component with bar code]
❑ 4” X 4 ½” [Large component with bar code]</td></tr>
<tr><td>Color Field</td><td>Color of Letters</td></tr>
<tr><td>❑ Blue
❑ Green
❑ Purple
❑ Red
❑ White
❑ Yellow</td><td>❑ Black
❑ Red
❑ White
❑ Yellow</td></tr>
<tr><td colspan="2">Installation Method:
❑ Stick on ❑ Wire tie – metal back</td><td>Notes:</td></tr>
</table>

Unless stamped and numbered as a Controlled Copy, the online version is the official version of this procedure. Before using a printed copy, verify that it is the most current version by checking the revision number and effective date against an official copy.

Attachment 2 – System Acronyms Quick Reference

*(Sorted in alphabetical order by **System Acronym**)*

Type	System Acronym	System Name	Legacy Acronyms	Label Color	
				Color Field	Letters
WATER	ACW	Aquatics Cold Water		Green	White
WATER	ACOOLW	Aquatics Cool Water		Green	White
WATER	AHW	Aquatics Hot Water		Green	White
WATER	APW	Aquatics Process Water	RVW, RVWC, RVWH	Green	White
Gas	AR	Argon	A, HPA, LA, LPA	Blue	White
Architectural	ARCH	Architectural		White	Black
WATER	ASW	Aquatics Source Water		Green	White
WATER	AWW	Aquatics Warm Water		Green	White
Gas	AY	Acetylene	C2H2	Yellow	Black
Air	BA	Breathing Air		Blue	White
WATER	BFW	Boiler Feed Water		Green	White
Electrical	C	Conditioned Power		White	Black
Gas	C02	Carbon Dioxide	C02	Blue	White
Air	CA	Compressed Air	A, HPA, LA, LPA	Blue	White
WATER	CF	Chemical Feed		Yellow	Black
Alarms	CHM	Chemical Hazard Monitor		Yellow	Black
WATER	CHW	Chilled Water Supply/Return	CW, CWR, CWS	Green	White
STEAM AND CONDENSATE	COND	Condensate	C, CD, CND, CNOS, CPR, CONDST, CR, DR	Yellow	Black
Alarms	CRAL	Criticality Alarm		Blue	White
MECHANICAL	CRN	Cranes	EQIP	White	Black
WATER	CW	Condenser Water Supply/Return	CONW	Green	White
Electrical	DC	DC Power		White	Black
WATER	CTSW	Cooling Tower Sump Water		Green	White
WATER	DHW	Detergent Hot Water		Green	White
WASTE	DR	Drain		Green	White
WATER	DTW	Dual Temperature Water		Green	White
Electrical	E	Emergency Power		Red	White
Air	EA	Exposure Air		Blue	White
WATER	ECW	Equipment Cooling Water		Green	White
Architectural	EHDWR	Locks/Keys/Hardware		White	Black
Electrical	EL	Emergency Lights		Red	White
MECHANICAL	ELEVTR	Elevators	ELEV, ELV, EQIP	White	Black
MISCELLANEOUS	EQIP	Equipment		White	Black
Alarms	FAL	Fire Alarm	FA	Red	White
WATER	FFW	Facility Fresh Water		Green	White
HVAC	FMCS	Facility Management Control System		White	Black
PIPING	FO	Fuel Oil (Supply or Return)	F	Yellow	Black

Unless stamped and numbered as a Controlled Copy, the online version is the official version of this procedure. Before using a printed copy, verify that it is the most current version by checking the revision number and effective date against an official copy.

Type	System Acronym	System Name	Legacy Acronyms	Label Color	
				Color Field	Letters
WATER	FP	Fire Protection Water	FPW, FW	Red	White
Architectural	FURN	Furniture		White	Black
WATER	FW	Filtered Water		Green	White
Gas	G	Natural Gas	NG	Yellow	Black
MISCELLANEOUS	GRNDS	Grounds		White	Black
Gas	HE	Helium	He, HeR	Blue	White
WATER	HHW	Heating Hot Water	PHHW, RHHW	Green	White
STEAM AND CONDENSATE	HPS	Steam, High Pressure	S, ST, STM	Yellow	Black
WATER	HPW	High Purity Water	DIW, DSW, DEW, DI, DW, DIR	Green	White
WATER	HRW	Heat Recovery Water (Supply/Return)		Green	White
VACUUM	HV	High Vacuum	V, VAC, VP	Blue	White
HVAC	HVAC	Heating, Ventilation, & Air Conditioning	HCV	White	Black
HVAC	HVC	Heating & Ventilation Controls		White	Black
HVAC	HVE	Heating & Ventilation Exhaust Air	E, EA	Yellow	Black
HVAC	HVR	Heating & Ventilation Return Air		White	Black
HVAC	HVS	Heating Ventilation Supply Air		White	Black
Gas	HYD	Hydrogen	H2, H2	Blue	White
Air	IA	Instrument Air		Blue	White
WATER	IDEC	Indirect-Direct Evaporative Cooling Water		Green	White
Electrical	LAN	Local Area Network		White	Black
Electrical	LI	Laser Interlock		Yellow	Black
Gas	LN2	Liquid Nitrogen	LN2	Yellow	Black
STEAM AND CONDENSATE	LPS	Steam, Low Pressure	S, ST, STM	Yellow	Black
VACUUM	LVS	Lab Vacuum	V, VP	Blue	White
STEAM AND CONDENSATE	MPS	Steam, Medium Pressure	S, ST, STM	Yellow	Black
Electrical	N	Normal Power	Elec	White	Black
Gas	N2	Nitrogen		Blue	White
Electrical	NL	Normal Lighting		White	Black
Gas	OX	Oxygen	02, 02	Blue	White
Gas	P10	P-10		Blue	White
Electrical	PA	Public Address System		White	Black
WATER	PCHW	Process Chilled Water (Supply/Return)	IDEC, LCHW, LCHWR, LCHWS	Green	White
WATER	PCW	Process Cold Water		Green	White
WASTE	PD	Pressure Drain		Green	White
Architectural	PFP	Passive Fire Protection		Red	White

Unless stamped and numbered as a Controlled Copy, the online version is the official version of this procedure. Before using a printed copy, verify that it is the most current version by checking the revision number and effective date against an official copy.

Type	System Acronym	System Name	Legacy Acronyms	Label Color	
				Color Field	Letters
WATER	PHHW	Preheat Heating Hot Water		Green	White
WATER	PHW	Process Hot Water (Supply/Return)		Green	White
Gas	PR	Propane		Yellow	Black
WASTE	PS	Process Sewer	AW, PD, PW	Green	White
MISCELLANEOUS	PTOOLS	Portable Tools	CR, EQIP	White	Black
WASTE	PV	Process Vent		Green	White
Alarms	RAL	Radiation Alarm	RA	Yellow	Black
WASTE	RD	Roof Drain		Green	White
R&D	RDEQ	R&D Equipment		White	Black
PIPING	RHG	Refrigerant Hot Gas		Green	White
PIPING	RL	Refrigerant Liquid		Green	White
WASTE	RLWS	Radioactive Liquid Waste System	RLW	Purple	Yellow
WATER	RO	Reverse Osmosis Water		Green	White
WASTE	RPS	Retention Process Sewer		Yellow	Black
PIPING	RS	Refrigerant Suction		Green	White
PIPING	RV	Refrigerant Vent		Green	White
WASTE	RVO	River Outfall		Green	White
WATER	RVW	River Water	IRR, RW, RVWW	Green	White
Electrical	S	Standby Power		White*	Red
Alarms	SAL	Security Alarm		White	Black
WASTE	SAN	Sanitary Sewer	SNS, SV	Green	White
WATER	SCW	Sanitary Cold Water	POT, SW, CSW	Green	White
WASTE	SD	Storm Drain	DR	Green	White
Alarms	SEC	Security Systems		White	Black
MISCELLANEOUS	SFA	Safety and First Aid		White	Black
WATER	SFT	Soft Water		Green	White
WATER	SHHW	Solar Heating Hot Water		Green	White
Gas	SG	Specialty Gas		Yellow	Black
WATER	SHW	Sanitary Hot Water (Supply/Return)	HSW	Green	White
HVAC	SM	Stack Monitoring	SSP	White	Black
WATER	SS	Safety Shower Water		Green	White
STEAM AND CONDENSATE	STEAM	Steam	S, ST, STM	Yellow	Black
Architectural	Structural	Structural		White	Black
WASTE	SV	Sanitary Vent		Green	White
WATER	SW	Sea Water		Green	White
WATER	SWF	Sea Water Filtered		Green	White
Electrical	TEL	Telephone		White	Black
Electrical	UPS	Uninterrupted Power Supply		Blue	White
VACUUM CVS	Vacuum CVS	Central Vacuum System (housekeeping)		Blue	White
VACUUM	VAS	Vacuum Air Sample		Blue	White

Unless stamped and numbered as a Controlled Copy, the online version is the official version of this procedure. Before using a printed copy, verify that it is the most current version by checking the revision number and effective date against an official copy.

Type	System Acronym	System Name	Legacy Acronyms	Label Color	
				Color Field	Letters
MISCELLANEOUS	VHLCS	Vehicles	CR, EQIP	White	Black
Electrical	VID	Video		White	Black
WATER	WFW	Waste Fresh Water	RVO	Green	White
WATER	WSW	Waste Sea Water		Green	White
WATER	WW	Well Water		Green	White

- Legacy labels for Standby Power have red backgrounds with white letters

Unless stamped and numbered as a Controlled Copy, the online version is the official version of this procedure. Before using a printed copy, verify that it is the most current version by checking the revision number and effective date against an official copy.

Attachment 3 – System Acronyms Quick Reference

*(Sorted in alphabetical order by **Type**)*

Type	System Acronym	System Name	Legacy Acronyms	Label Color	
				Color Field	Letters
Air	BA	Breathing Air		Blue	White
Air	CA	Compressed Air	A, HPA, LA, LPA	Blue	White
Air	EA	Exposure Air		Blue	White
Air	IA	Instrument Air		Blue	White
Alarms	CHM	Chemical Hazard Monitor		Yellow	Black
Alarms	CRAL	Criticality Alarm		Blue	White
Alarms	FAL	Fire Alarm	FA	Red	White
Alarms	RAL	Radiation Alarm	RA	Yellow	Black
Alarms	SAL	Security Alarm		White	Black
Alarms	SEC	Security Systems		White	Black
Architectural	ARCH	Architectural		White	Black
Architectural	EHDWR	Locks/Keys/Hardware		White	Black
Architectural	FURN	Furniture		White	Black
Architectural	PFP	Passive Fire Protection		Red	White
Architectural	SC	Shielded Confinement		White	Black
Architectural	Structural	Structural		White	Black
Electrical	C	Conditioned Power		White	Black
Electrical	DC	DC Power		White	Black
Electrical	E	Emergency Power		Red	White
Electrical	EL	Emergency Lights		Red	White
Electrical	LAN	Local Area Network		White	Black
Electrical	LI	Laser Interlock		Yellow	Black
Electrical	N	Normal Power	Elec	White	Black
Electrical	NL	Normal Lighting		White	Black
Electrical	PA	Public Address System		White	Black
Electrical	S	Standby Power		White*	Red
Electrical	TEL	Telephone		White	Black
Electrical	UPS	Uninterrupted Power Supply		Blue	White
Electrical	VID	Video		White	Black
Gas	AR	Argon	A, HPA, LA, LPA	Blue	White
Gas	AY	Acetylene	C2H2	Yellow	Black
Gas	C02	Carbon Dioxide	C02	Blue	White
Gas	G	Natural Gas	NG	Yellow	Black
Gas	HE	Helium	He, HeR	Blue	White
Gas	HYD	Hydrogen	H2, H2	Blue	White
Gas	LN2	Liquid Nitrogen	LN2	Yellow	Black
Gas	N2	Nitrogen		Blue	White
Gas	OX	Oxygen	02, 02	Blue	White
Gas	P10	P-10		Blue	White
Gas	PR	Propane		Yellow	Black
Gas	SG	Specialty Gas		Yellow	Black
HVAC	FMCS	Facility Management Control System		White	Black

Unless stamped and numbered as a Controlled Copy, the online version is the official version of this procedure. Before using a printed copy, verify that it is the most current version by checking the revision number and effective date against an official copy.

Type	System Acronym	System Name	Legacy Acronyms	Label Color	
HVAC	HVAC	Heating, Ventilation, & Air Conditioning	HCV	White	Black
HVAC	HVC	Heating & Ventilation Controls		White	Black
HVAC	HVE	Heating & Ventilation Exhaust Air	E, EA	Yellow	Black
HVAC	HVR	Heating & Ventilation Return Air		White	Black
HVAC	HVS	Heating Ventilation Supply Air		White	Black
HVAC	SM	Stack Monitoring	SSP	White	Black
MECHANICAL	CRN	Cranes	EQIP	White	Black
MECHANICAL	ELEVTR	Elevators	ELEV, ELV, EQIP	White	Black
MISCELLANEOUS	EQIP	Equipment		White	Black
MISCELLANEOUS	GRNDS	Grounds		White	Black
MISCELLANEOUS	PTOOLS	Portable Tools	CR, EQIP	White	Black
MISCELLANEOUS	SFA	Safety and First Aid		White	Black
MISCELLANEOUS	VHLCS	Vehicles	CR, EQIP	White	Black
PIPING	FO	Fuel Oil (Supply or Return)	F	Yellow	Black
PIPING	RHG	Refrigerant Hot Gas		Green	White
PIPING	RL	Refrigerant Liquid		Green	White
PIPING	RS	Refrigerant Suction		Green	White
PIPING	RV	Refrigerant Vent		Green	White
R&D	RDEQ	R&D Equipment		White	Black
STEAM AND CONDENSATE	COND	Condensate	C, CD, CND, CNOS, CPR, CONDST, CR, DR	Yellow	Black
STEAM AND CONDENSATE	HPS	Steam, High Pressure	S, ST, STM	Yellow	Black
STEAM AND CONDENSATE	LPS	Steam, Low Pressure	S, ST, STM	Yellow	Black
STEAM AND CONDENSATE	MPS	Steam, Medium Pressure	S, ST, STM	Yellow	Black
STEAM AND CONDENSATE	STEAM	Steam	S, ST, STM	Yellow	Black
VACUUM	HV	High Vacuum	V, VAC, VP	Blue	White
VACUUM	LVS	Lab Vacuum	V, VP	Blue	White
VACUUM	VAS	Vacuum Air Sample		Blue	White
VACUUM CVS	Vacuum CVS	Central Vacuum System (housekeeping)		Blue	White
WASTE	DR	Drain		Green	White
WASTE	PD	Pressure Drain		Green	White
WASTE	PS	Process Sewer	AW, PD, PW	Green	White
WASTE	PV	Process Vent		Green	White
WASTE	RD	Roof Drain		Green	White
WASTE	RLWS	Radioactive Liquid Waste System	RLW	Purple	Yellow
WASTE	RPS	Retention Process Sewer		Yellow	Black

Unless stamped and numbered as a Controlled Copy, the online version is the official version of this procedure. Before using a printed copy, verify that it is the most current version by checking the revision number and effective date against an official copy.

Type	System Acronym	System Name	Legacy Acronyms	Label Color	
WASTE	RVO	River Outfall		Green	White
WASTE	SAN	Sanitary Sewer	SNS, SV	Green	White
WASTE	SD	Storm Drain	DR	Green	White
WASTE	SV	Sanitary Vent		Green	White
WATER	ACW	Aquatics Cold Water		Green	White
WATER	ACOOLW	Aquatics Cool Water		Green	White
WATER	AHW	Aquatics Hot Water		Green	White
WATER	APW	Aquatics Process Water	RVW, RVWC, RVWH	Green	White
WATER	ASW	Aquatics Source Water		Green	White
WATER	AWW	Aquatics Warm Water		Green	White
WATER	BFW	Boiler Feed Water		Green	White
WATER	CF	Chemical Feed		Yellow	Black
WATER	CHW	Chilled Water Supply/Return	CW, CWR, CWS	Green	White
WATER	CW	Condenser Water Supply/Return	CONW	Green	White
WATER	CTSW	Cooling Tower Sump Water		Green	White
WATER	DHW	Detergent Hot Water		Green	White
WATER	DTW	Dual Temperature Water		Green	White
WATER	ECW	Equipment Cooling Water		Green	White
WATER	FFW	Facility Fresh Water		Green	White
WATER	FP	Fire Protection Water	FPW, FW	Red	White
WATER	FW	Filtered Water		Green	White
WATER	HHW	Heating Hot Water	PHHW, RHHW	Green	White
WATER	HPW	High Purity Water	DIW, DSW, DEW, DI, DW, DIR	Green	White
WATER	HRW	Heat Recovery Water (Supply/Return)		Green	White
WATER	IDEC	Indirect-Direct Evaporative Cooling Water		Green	White
WATER	PCHW	Process Chilled Water (Supply/Return)	IDEC, LCHW, LCHWR, LCHWS	Green	White
WATER	PCW	Process Cold Water		Green	White
WATER	PHHW	Preheat Heating Hot Water		Green	White
WATER	PHW	Process Hot Water (Supply/Return)		Green	White
WATER	RO	Reverse Osmosis Water		Green	White
WATER	RVW	River Water	IRR, RW, RVWW	Green	White
WATER	SCW	Sanitary Cold Water	POT, SW, CSW	Green	White
WATER	SFT	Soft Water		Green	White
WATER	SHHW	Solar Heating Hot Water		Green	White
WATER	SHW	Sanitary Hot Water (Supply/Return)	HSW	Green	White
WATER	SS	Safety Shower Water		Green	White
WATER	SW	Sea Water		Green	White

Unless stamped and numbered as a Controlled Copy, the online version is the official version of this procedure. Before using a printed copy, verify that it is the most current version by checking the revision number and effective date against an official copy.

Type	System Acronym	System Name	Legacy Acronyms	Label Color	
WATER	SWF	Sea Water Filtered		Green	White
WATER	WFW	Waste Fresh Water	RVO	Green	White
WATER	WSW	Waste Sea Water		Green	White
WATER	WW	Well Water		Green	White

- - Legacy labels for Standby Power have red backgrounds with white letters

Unless stamped and numbered as a Controlled Copy, the online version is the official version of this procedure. Before using a printed copy, verify that it is the most current version by checking the revision number and effective date against an official copy.

Attachment 4 - Component Acronyms Quick Reference

*(Sorted in alphabetical order by **Type**)*

Type	Component Acronym	Component Name
ALARM/CONTROL	AP	Alarm Panel
ALARM/CONTROL	ARM	Area Radiation Monitor
ALARM/CONTROL	BMS	Balanced Magnetic Switch
ALARM/CONTROL	CD	Criticality Detector
ALARM/CONTROL	CHD	Chemical Hazard Detector
ALARM/CONTROL	CS	Combination Strobe
ALARM/CONTROL	FPS	Flow Alarm Pressure Switch
ALARM/CONTROL	G	Fire Gong
ALARM/CONTROL	GM	Gamma Monitor
ALARM/CONTROL	H	Horn
ALARM/CONTROL	HD	Heat Detector
ALARM/CONTROL	HWLR	Howler
ALARM/CONTROL	MD	Motion Detector
ALARM/CONTROL	MPS	Manual Pull Station
ALARM/CONTROL	PS	Pressure Switch
ALARM/CONTROL	RM	Radiation Monitor
ALARM/CONTROL	S	Fire Strobe
ALARM/CONTROL	SD	Smoke Detector
ALARM/CONTROL	SN	Siren
ALARM/CONTROL	TS	Tamper Switch
ARCHITECTURAL / STRUCTURAL	AG	Agitator
ARCHITECTURAL / STRUCTURAL	ARR	Array (Storage Array)
ARCHITECTURAL / STRUCTURAL	CAB	Cabinet
ARCHITECTURAL / STRUCTURAL	CEILING	Ceiling
ARCHITECTURAL / STRUCTURAL	CL	Column
ARCHITECTURAL / STRUCTURAL	DOOR	Door
ARCHITECTURAL / STRUCTURAL	FD	Fire Rated Door
ARCHITECTURAL / STRUCTURAL	FLOOR	Floor
ARCHITECTURAL / STRUCTURAL	FR	Fall Restraint
ARCHITECTURAL / STRUCTURAL	FURN	Furniture
ARCHITECTURAL / STRUCTURAL	FW	Fire Rated Wall
ARCHITECTURAL/STRUCTURAL	HC	Hot Cell
ARCHITECTURAL / STRUCTURAL	INS	Insulation
ARCHITECTURAL / STRUCTURAL	PARK	Parking Lot
ARCHITECTURAL / STRUCTURAL	RGUT	Roof Gutter
ARCHITECTURAL / STRUCTURAL	ROAD	Road
ARCHITECTURAL / STRUCTURAL	ROOF	Roof
ARCHITECTURAL / STRUCTURAL	RUD	Rollup Door
ARCHITECTURAL / STRUCTURAL	SIDE	Sidewalk
ARCHITECTURAL / STRUCTURAL	STRS	Stairs
ARCHITECTURAL / STRUCTURAL	WALL	Wall
ARCHITECTURAL / STRUCTURAL	WIN	Window
ELECTRICAL	ATS	Auto Transfer Switch
ELECTRICAL	BA	Battery

Unless stamped and numbered as a Controlled Copy, the online version is the official version of this procedure. Before using a printed copy, verify that it is the most current version by checking the revision number and effective date against an official copy.

Type	Component Acronym	Component Name
ELECTRICAL	BU	Bus or Bus Duct
ELECTRICAL	CAM	Camera
ELECTRICAL	CB	Circuit Breaker
ELECTRICAL	CCS	Car Charging Station
ELECTRICAL	COM	Computer
ELECTRICAL	CP	Control Panel or Motor Starter
ELECTRICAL	CPU	Central Processing Unit
ELECTRICAL	CTRL	Controller
ELECTRICAL	DB	Distribution Board
ELECTRICAL	DIS	Disconnect
ELECTRICAL	DP	Distribution Panel
ELECTRICAL	ECS	Emergency Call Station
ELECTRICAL	EDH	Electric Duct Heater
ELECTRICAL	ELT	Emergency Light
ELECTRICAL	EX	Exciter
ELECTRICAL	FUS	Fuse
ELECTRICAL	GEN	Generator
ELECTRICAL	GOV	Governor
ELECTRICAL	HT	Heat Trace
ELECTRICAL	IL	Indicator Light
ELECTRICAL	INV	Inverter
ELECTRICAL	JB	Junction Box
ELECTRICAL	LAMP	Lamp (Lights)
ELECTRICAL	LS	Loud Speaker
ELECTRICAL	M	Motor
ELECTRICAL	MCC	Motor Control Center
ELECTRICAL	MS	Main Switch
ELECTRICAL	MTS	Manual Transfer Switch
ELECTRICAL	P	Panel
ELECTRICAL	PB	Pull Box
ELECTRICAL	PBTN	Push Button
ELECTRICAL	PCTR	Pump Controller
ELECTRICAL	PDU	Power Distribution Units
ELECTRICAL	PVP	Photovoltaic Panel
ELECTRICAL	PWRS	Power Supply
ELECTRICAL	RHEO	Rheostat
ELECTRICAL	RLY	Relay
ELECTRICAL	SW	Switch
ELECTRICAL	SWGR	Switchgear
ELECTRICAL	TB	Tie Breaker
ELECTRICAL	UPS	Uninterruptible Power Supply
ELECTRICAL	UV	UV Lights
ELECTRICAL	VFD	Variable Frequency Drive
ELECTRICAL	VM	Video Monitor
ELECTRICAL	XFMR	Transformer
HVAC	AC	Air Conditioner
HVAC	AHU	Air Handling Unit

Unless stamped and numbered as a Controlled Copy, the online version is the official version of this procedure. Before using a printed copy, verify that it is the most current version by checking the revision number and effective date against an official copy.

Type	Component Acronym	Component Name
HVAC	BSC	Biological Safety Cabinet
HVAC	CAN	Canopy
HVAC	CAV	Constant Air Volume Box
HVAC	CH	Chiller
HVAC	COIL	Coil
HVAC	CT	Cooling Tower
HVAC	DHRC	Dedicated Heat Recovery Chiller
HVAC	DMP	Damper
HVAC	EF	Exhaust Fan
HVAC	EG	Exhaust Grill
HVAC	ENC	Enclosure
HVAC	EVP	Evaporator
HVAC	F	Fan
HVAC	FCU	Fan Coil Unit
HVAC	FDMP	Fire Damper
HVAC	FH	Fume Hood
HVAC	GB	Glove Box
HVAC	GC	Gas Cabinet
HVAC	HEPA	HEPA Filter
HVAC	HP	Heat Pump
HVAC	HTR	Heater
HVAC	HUM	Humidifier
HVAC	MAU	Make-Up Air Unit
HVAC	PLEN	Plenum
HVAC	PSNR	Positioner
HVAC	RF	Return Fan
HVAC	RG	Return Grill
HVAC	RHTR	Re-heater
HVAC	SAD	Sound Attenuating Device
HVAC	SF	Supply Fan
HVAC	SG	Supply Grill
HVAC	SNO	Snorkel
HVAC	STK	Stack (Exhaust Stack)
HVAC	UH	Unit Heater
HVAC	VAV	Variable Air Volume Box
HVAC	VTR	Venturi Airflow Control VLV
INSTRUMENTATION	CE	Conductivity Element
INSTRUMENTATION	CHR	Chart Recorder
INSTRUMENTATION	DL	Data Logger
INSTRUMENTATION	DPI	Differential Pressure Indicator
INSTRUMENTATION	DPS	Differential Pressure Switch
INSTRUMENTATION	FCT	Flow Controller
INSTRUMENTATION	FE	Flow Element
INSTRUMENTATION	FM	Flow Meter
INSTRUMENTATION	FS	Flow Switch
INSTRUMENTATION	FT	Flow Transmitter
INSTRUMENTATION	HFC	Hand and Foot Counter

Unless stamped and numbered as a Controlled Copy, the online version is the official version of this procedure. Before using a printed copy, verify that it is the most current version by checking the revision number and effective date against an official copy.

Type	Component Acronym	Component Name
INSTRUMENTATION	HMD	Humidity Detector
INSTRUMENTATION	LD	Leak Detector
INSTRUMENTATION	LE	Level Element
INSTRUMENTATION	LR	Level Recorder
INSTRUMENTATION	LT	Level Transmitter
INSTRUMENTATION	PCM	Personnel Contamination Monitor
INSTRUMENTATION	PE	Pressure Element
INSTRUMENTATION	PHE	PH Element/Conductivity
INSTRUMENTATION	PHR	PH Recorder
INSTRUMENTATION	PHT	PH Transmitter
INSTRUMENTATION	PLD	Particle Leak Detector
INSTRUMENTATION	PRC	Pressure Recorder
INSTRUMENTATION	PT	Pressure Transmitter
INSTRUMENTATION	SALT	Salinity Transmitter
INSTRUMENTATION	SNBR	Snubber
INSTRUMENTATION	SGR	Specific Gravity Recorder
INSTRUMENTATION	SGT	Specific Gravity Transmitter
INSTRUMENTATION	SM	Stack Monitor
INSTRUMENTATION	SSP	Stack Sampling Probe
INSTRUMENTATION	TE	Temperature Element
INSTRUMENTATION	TES	Temperature Switch
INSTRUMENTATION	TH	Thermostat
INSTRUMENTATION	THRM	Thermometer
INSTRUMENTATION	TR	Temperature Recorder
INSTRUMENTATION	TT	Temperature Transmitter
INSTRUMENTATION	TW	Thermo Well
OTHER	02K	Oxygen Kit
OTHER	03D	Ozone Destruct Kit
OTHER	03GEN	Ozone Generator
OTHER	03MON	Ozone Monitor
OTHER	ACLV	Autoclave
OTHER	AED	Automatic External Defibrillator
OTHER	CASK	Cask
OTHER	CBAS	Catch Basin
OTHER	CC	Cargo Container
OTHER	CGW	Cage Washer
OTHER	CRN	Crane
OTHER	DW	Dishwasher
OTHER	ELV	Elevator
OTHER	EXT	Fire Extinguisher
OTHER	FL	Forklift
OTHER	FRZ	Freezer
OTHER	GL	Glass Washer
OTHER	HOI	Hoist
OTHER	IB	Infiltration Bed
OTHER	ICE	Ice Maker
OTHER	LAD	Ladder

Unless stamped and numbered as a Controlled Copy, the online version is the official version of this procedure. Before using a printed copy, verify that it is the most current version by checking the revision number and effective date against an official copy.

Type	Component Acronym	Component Name
OTHER	MX	Mixer
OTHER	PVAC	Portable HEPA Vacuum Cleaner
OTHER	PRSP	Pressure Sprayer
OTHER	RAIL	Crane Rail
OTHER	REF	Refrigerator
OTHER	SAC	Screw-adjusted Clamp
OTHER	SB	Storage Basin
OTHER	SGATE	Security Gate
OTHER	SGE	Small Gasoline Engine
OTHER	SK	Spill Kit
OTHER	STLZ	Sterilizer
OTHER	SYS	System
OTHER	TRAC	Tractor
OTHER	TRF	Traffic Areas
OTHER	VEH	Vehicle
PIPING	ACC	Accumulator
PIPING	ACTR	Actuator
PIPING	AD	Air Dryer
PIPING	ADF	Auto Dewar Fill Station
PIPING	AHX	Air Heat Exchanger
PIPING	AS	Air Separator
PIPING	AV	Air Vent
PIPING	BLR	Boiler
PIPING	BLWR	Blower
PIPING	BT	Buffer Tank
PIPING	COMP	Compressor
PIPING	COND	Condenser
PIPING	CPF	Chemical Pot Feeder
PIPING	CR	Coupon Rack
PIPING	CSE	Combination Safety Shower/Eyewash
PIPING	DAIR	De-aerator
PIPING	DALK	De-alkalizer
PIPING	DF	Drinking Fountain
PIPING	DFC	Dry Fluid Cooler
PIPING	DH	Drench Hose
PIPING	DRN	Drain
PIPING	DS	Downspout
PIPING	DT	Drying Tower
PIPING	EJ	Expansion Joint
PIPING	ET	Expansion Tank
PIPING	EJTR	Ejector
PIPING	EW	Eyewash
PIPING	FDR	Floor Drain
PIPING	FLT	Filter
PIPING	GA	Gauge
PIPING	HB	Hose Bib
PIPING	HBOX	Hot Box

Unless stamped and numbered as a Controlled Copy, the online version is the official version of this procedure. Before using a printed copy, verify that it is the most current version by checking the revision number and effective date against an official copy.

Type	Component Acronym	Component Name
PIPING	HX	Heat Exchanger
PIPING	IX	Ion Exchange
PIPING	L	Lavatory
PIPING	LHX	Liquid Heat Exchanger
PIPING	MSP	Moisture Separator
PIPING	MUF	Muffler
PIPING	OG	Oxygen Generator
PIPING	OT	Oxy Tower
PIPING	OTS	Oxy Tower Sump
PIPING	PMP	Pump
PIPING	RC	Retard Chamber
PIPING	REC	Receiver
PIPING	RISER	Fire Riser
PIPING	RO	Reverse Osmosis Unit
PIPING	RPD	Rupture Disk
PIPING	SA	Shock Arrester
PIPING	SCR	Scrubber
PIPING	SH	Safety Shower or Shower
PIPING	SINK	Sink
PIPING	SJ	Seismic Joint
PIPING	SP	Solar Panel
PIPING	SPKLR	Sprinkler Head (FIRE)
PIPING	SS	Sample Station
PIPING	ST	Steam Trap
PIPING	STR	Strainer
PIPING	SUMP	Sump
PIPING	TK	Tank
PIPING	TP	Trap Primer
PIPING	UR	Urinal
PIPING	UVIU	Ultraviolet Irradiation Unit
PIPING	VBR	Vacuum Breaker
PIPING	VT	Vacuum Trap
PIPING	WC	Water Closet
PIPING	WHTR	Water Heater
PIPING	WQM	Water Quality Monitor
PIPING	WS	Water Softener
VALVE	AOV	Air Operated Valve
VALVE	BFP	Backflow Preventer
VALVE	CTV	Control Valve
VALVE	CV	Check Valve
VALVE	FCV	Flow Control Valve
VALVE	HOV	Hydraulically Operated Valve
VALVE	HV	Hydrant Valve
VALVE	LCV	Level Control Valve
VALVE	MOV	Motor Operated Valve
VALVE	OSY	Outside Screw and Yoke Valve
VALVE	PCV	Pressure Control Valve

Unless stamped and numbered as a Controlled Copy, the online version is the official version of this procedure. Before using a printed copy, verify that it is the most current version by checking the revision number and effective date against an official copy.

Type	Component Acronym	Component Name
VALVE	PIV	Position Indicating Valve
VALVE	PRV	Pressure Regulating Valve
VALVE	RV	Reducing Valve
VALVE	SCV	Sectionalizing Control Valve
VALVE	SPRV	Steam Pressure Regulator Valve
VALVE	SRV	Safety Relief Valve
VALVE	SV	Solenoid Valve
VALVE	VLV	Valve

Unless stamped and numbered as a Controlled Copy, the online version is the official version of this procedure. Before using a printed copy, verify that it is the most current version by checking the revision number and effective date against an official copy.

Attachment 5 - Component Acronyms Quick Reference

*(Sorted in alphabetical order by **Component Acronym**)*

Type	Component Acronym	Component Name
OTHER	02K	Oxygen Kit
OTHER	03D	Ozone Destruct Kit
OTHER	03GEN	Ozone Generator
OTHER	03MON	Ozone Monitor
HVAC	AC	Air Conditioner
PIPING	ACC	Accumulator
OTHER	ACLV	Autoclave
PIPING	ACTR	Actuator
PIPING	AD	Air Dryer
PIPING	ADF	Auto Dewar Fill Station
OTHER	AED	Automatic External Defibrillator
ARCHITECTURAL / STRUCTURAL	AG	Agitator
HVAC	AHU	Air Handling Unit
PIPING	AHX	Air Heat Exchanger
VALVE	AOV	Air Operated Valve
ALARM/CONTROL	AP	Alarm Panel
ALARM/CONTROL	ARM	Area Radiation Monitor
ARCHITECTURAL / STRUCTURAL	ARR	Array (Storage Array)
PIPING	AS	Air Separator
ELECTRICAL	ATS	Auto Transfer Switch
PIPING	AV	Air Vent
ELECTRICAL	BA	Battery
VALVE	BFP	Backflow Preventer
PIPING	BLR	Boiler
PIPING	BLWR	Blower
ALARM/CONTROL	BMS	Balanced Magnetic Switch
HVAC	BSC	Biological Safety Cabinet
PIPING	BT	Buffer Tank
ELECTRICAL	BU	Bus or Bus Duct
ARCHITECTURAL / STRUCTURAL	CAB	Cabinet
ELECTRICAL	CAM	Camera
HVAC	CAN	Canopy
OTHER	CASK	Cask
HVAC	CAV	Constant Air Volume Box
ELECTRICAL	CB	Circuit Breaker
OTHER	CBAS	Catch Basin
OTHER	CC	Cargo Container
ALARM/CONTROL	CD	Criticality Detector
INSTRUMENTATION	CE	Conductivity Element
ARCHITECTURAL / STRUCTURAL	CEILING	Ceiling
OTHER	CGW	Cage Washer
HVAC	CH	Chiller
ALARM/CONTROL	CHD	Chemical Hazard Detector
INSTRUMENTATION	CHR	Chart Recorder

Unless stamped and numbered as a Controlled Copy, the online version is the official version of this procedure. Before using a printed copy, verify that it is the most current version by checking the revision number and effective date against an official copy.

Type	Component Acronym	Component Name
ARCHITECTURAL / STRUCTURAL	CL	Column
HVAC	COIL	Coil
ELECTRICAL	COM	Computer
PIPING	COMP	Compressor
PIPING	COND	Condenser
ELECTRICAL	CP	Control Panel or Motor Starter
PIPING	CPF	Chemical Pot Feeder
ELECTRICAL	CPU	Central Processing Unit
PIPING	CR	Coupon Rack
OTHER	CRN	Crane
ALARM/CONTROL	CS	Combination Strobe
PIPING	CSE	Combination Safety Shower/Eyewash
HVAC	CT	Cooling Tower
ELECTRICAL	CTRL	Controller
VALVE	CTV	Control Valve
VALVE	CV	Check Valve
PIPING	DAIR	De-aerator
PIPING	DALK	De-alkalizer
ELECTRICAL	DB	Distribution Board
PIPING	DF	Drinking Fountain
PIPING	DFC	Dry Fluid Cooler
PIPING	DH	Drench Hose
HVAC	DHRC	Dedicated Heat Recovery Chiller
ELECTRICAL	DIS	Disconnect
INSTRUMENTATION	DL	Data Logger
HVAC	DMP	Damper
ARCHITECTURAL / STRUCTURAL	DOOR	Door
ELECTRICAL	DP	Distribution Panel
INSTRUMENTATION	DPI	Differential Pressure Indicator
INSTRUMENTATION	DPS	Differential Pressure Switch
PIPING	DRN	Drain
PIPING	DS	Downspout
PIPING	DT	Drying Tower
OTHER	DW	Dishwasher
ELECTRICAL	ECS	Emergency Call Station
ELECTRICAL	EDH	Electric Duct Heater
HVAC	EF	Exhaust Fan
HVAC	EG	Exhaust Grill
PIPING	EJ	Expansion Joint
PIPING	EJTR	Ejector
ELECTRICAL	ELT	Emergency Light
OTHER	ELV	Elevator
HVAC	ENC	Enclosure
PIPING	ET	Expansion Tank
HVAC	EVP	Evaporator
PIPING	EW	Eyewash
ELECTRICAL	EX	Exciter

Unless stamped and numbered as a Controlled Copy, the online version is the official version of this procedure. Before using a printed copy, verify that it is the most current version by checking the revision number and effective date against an official copy.

Type	Component Acronym	Component Name
OTHER	EXT	Fire Extinguisher
HVAC	F	Fan
INSTRUMENTATION	FCT	Flow Controller
HVAC	FCU	Fan Coil Unit
VALVE	FCV	Flow Control Valve
ARCHITECTURAL / STRUCTURAL	FD	Fire Rated Door
HVAC	FDMP	Fire Damper
PIPING	FDR	Floor Drain
INSTRUMENTATION	FE	Flow Element
HVAC	FH	Fume Hood
OTHER	FL	Forklift
ARCHITECTURAL / STRUCTURAL	FLOOR	Floor
PIPING	FLT	Filter
INSTRUMENTATION	FM	Flow Meter
ALARM/CONTROL	FPS	Flow Alarm Pressure Switch
ARCHITECTURAL / STRUCTURAL	FR	Fall Restraint
OTHER	FRZ	Freezer
INSTRUMENTATION	FS	Flow Switch
INSTRUMENTATION	FT	Flow Transmitter
ARCHITECTURAL / STRUCTURAL	FURN	Furniture
ELECTRICAL	FUS	Fuse
ARCHITECTURAL / STRUCTURAL	FW	Fire Rated Wall
ALARM/CONTROL	G	Fire Gong
PIPING	GA	Gauge
HVAC	GB	Glove Box
HVAC	GC	Gas Cabinet
ELECTRICAL	GEN	Generator
OTHER	GL	Glass Washer
ALARM/CONTROL	GM	Gamma Monitor
ELECTRICAL	GOV	Governor
ALARM/CONTROL	H	Horn
PIPING	HB	Hose Bib
PIPING	HBOX	Hot Box
ARCHITECTURAL/STRUCTURAL	HC	Hot Cell
ALARM/CONTROL	HD	Heat Detector
HVAC	HEPA	HEPA Filter
INSTRUMENTATION	HFC	Hand and Foot Counter
INSTRUMENTATION	HMD	Humidity Detector
OTHER	HOI	Hoist
VALVE	HOV	Hydraulically Operated Valve
HVAC	HP	Heat Pump
ELECTRICAL	HT	Heat Trace
HVAC	HTR	Heater
HVAC	HUM	Humidifier
VALVE	HV	Hydrant Valve
ALARM/CONTROL	HWLR	Howler
PIPING	HX	Heat Exchanger

Unless stamped and numbered as a Controlled Copy, the online version is the official version of this procedure. Before using a printed copy, verify that it is the most current version by checking the revision number and effective date against an official copy.

Type	Component Acronym	Component Name
OTHER	IB	Infiltration Bed
OTHER	ICE	Ice Maker
ELECTRICAL	IL	Indicator Light
ELECTRICAL	INV	Inverter
ARCHITECTURAL / STRUCTURAL	INS	Insulation
PIPING	IX	Ion Exchange
ELECTRICAL	JB	Junction Box
PIPING	L	Lavatory
OTHER	LAD	Ladder
ELECTRICAL	LAMP	Lamp (Lights)
VALVE	LCV	Level Control Valve
INSTRUMENTATION	LD	Leak Detector
INSTRUMENTATION	LE	Level Element
PIPING	LHX	Liquid Heat Exchanger
INSTRUMENTATION	LR	Level Recorder
ELECTRICAL	LS	Loud Speaker
INSTRUMENTATION	LT	Level Transmitter
ELECTRICAL	M	Motor
HVAC	MAU	Make-Up Air Unit
ELECTRICAL	MCC	Motor Control Center
ALARM/CONTROL	MD	Motion Detector
VALVE	MOV	Motor Operated Valve
ALARM/CONTROL	MPS	Manual Pull Station
ELECTRICAL	MS	Main Switch
PIPING	MSP	Moisture Separator
ELECTRICAL	MTS	Manual Transfer Switch
PIPING	MUF	Muffler
OTHER	MX	Mixer
VALVE	OSY	Outside Screw and Yoke Valve
PIPING	OG	Oxygen Generator
PIPING	OT	Oxy Tower
PIPING	OTS	Oxy Tower Sump
ELECTRICAL	P	Panel
ARCHITECTURAL / STRUCTURAL	PARK	Parking Lot
ELECTRICAL	PB	Pull Box
ELECTRICAL	PBTN	Push Button
INSTRUMENTATION	PCM	Personnel Contamination Monitor
ELECTRICAL	PCTR	Pump Controller
VALVE	PCV	Pressure Control Valve
ELECTRICAL	PDU	Power Distribution Units
INSTRUMENTATION	PE	Pressure Element
INSTRUMENTATION	PHE	PH Element/Conductivity
INSTRUMENTATION	PHR	PH Recorder
INSTRUMENTATION	PHT	PH Transmitter
VALVE	PIV	Position Indicating Valve
INSTRUMENTATION	PLD	Particle Leak Detector
HVAC	PLEN	Plenum

Unless stamped and numbered as a Controlled Copy, the online version is the official version of this procedure. Before using a printed copy, verify that it is the most current version by checking the revision number and effective date against an official copy.

Type	Component Acronym	Component Name
PIPING	PMP	Pump
INSTRUMENTATION	PRC	Pressure Recorder
OTHER	PRSP	Pressure Sprayer
VALVE	PRV	Pressure Regulating Valve
ALARM/CONTROL	PS	Pressure Switch
HVAC	PSNR	Positioner
INSTRUMENTATION	PT	Pressure Transmitter
OTHER	PVAC	Portable HEPA Vacuum Cleaner
ELECTRICAL	PVP	Photovoltaic Panel
ELECTRICAL	PWRS	Power Supply
OTHER	RAIL	Crane Rail
PIPING	RC	Retard Chamber
PIPING	REC	Receiver
OTHER	REF	Refrigerator
HVAC	RF	Return Fan
HVAC	RG	Return Grill
ARCHITECTURAL / STRUCTURAL	RGUT	Roof Gutter
ELECTRICAL	RHEO	Rheostat
HVAC	RHTR	Re-heater
PIPING	RISER	Fire Riser
ELECTRICAL	RLY	Relay
ALARM/CONTROL	RM	Radiation Monitor
PIPING	RO	Reverse Osmosis Unit
ARCHITECTURAL / STRUCTURAL	ROAD	Road
ARCHITECTURAL / STRUCTURAL	ROOF	Roof
PIPING	RPD	Rupture Disk
ARCHITECTURAL / STRUCTURAL	RUD	Rollup Door
VALVE	RV	Reducing Valve
ALARM/CONTROL	S	Fire Strobe
PIPING	SA	Shock Arrester
OTHER	SAC	Screw-adjusted Clamp
HVAC	SAD	Sound Attenuating Device
INSTRUMENTATION	SALT	Salinity Transmitter
OTHER	SB	Storage Basin
PIPING	SCR	Scrubber
VALVE	SCV	Sectionalizing Control Valve
ALARM/CONTROL	SD	Smoke Detector
HVAC	SF	Supply Fan
HVAC	SG	Supply Grill
OTHER	SGATE	Security Gate
OTHER	SGE	Small Gasoline Engine
INSTRUMENTATION	SGR	Specific Gravity Recorder
INSTRUMENTATION	SGT	Specific Gravity Transmitter
PIPING	SH	Safety Shower or Shower
ARCHITECTURAL / STRUCTURAL	SIDE	Sidewalk
PIPING	SINK	Sink
PIPING	SJ	Seismic Joint

Unless stamped and numbered as a Controlled Copy, the online version is the official version of this procedure. Before using a printed copy, verify that it is the most current version by checking the revision number and effective date against an official copy.

Type	Component Acronym	Component Name
OTHER	SK	Spill Kit
INSTRUMENTATION	SM	Stack Monitor
ALARM/CONTROL	SN	Siren
INSTRUMENTATION	SNBR	Snubber
HVAC	SNO	Snorkel
PIPING	SP	Solar Panel
PIPING	SPKLR	Sprinkler Head (FIRE)
VALVE	SPRV	Steam Pressure Regulator Valve
VALVE	SRV	Safety Relief Valve
PIPING	SS	Sample Station
INSTRUMENTATION	SSP	Stack Sampling Probe
PIPING	ST	Steam Trap
HVAC	STK	Stack (Exhaust Stack)
OTHER	STLZ	Sterilizer
PIPING	STR	Strainer
ARCHITECTURAL / STRUCTURAL	STRS	Stairs
PIPING	SUMP	Sump
VALVE	SV	Solenoid Valve
ELECTRICAL	SW	Switch
ELECTRICAL	SWGR	Switchgear
OTHER	SYS	System
ELECTRICAL	TB	Tie Breaker
INSTRUMENTATION	TE	Temperature Element
INSTRUMENTATION	TES	Temperature Switch
INSTRUMENTATION	TH	Thermostat
INSTRUMENTATION	THRM	Thermometer
PIPING	TK	Tank
PIPING	TP	Trap Primer
INSTRUMENTATION	TR	Temperature Recorder
OTHER	TRAC	Tractor
OTHER	TRF	Traffic Areas
ALARM/CONTROL	TS	Tamper Switch
INSTRUMENTATION	TT	Temperature Transmitter
INSTRUMENTATION	TW	Thermo Well
HVAC	UH	Unit Heater
ELECTRICAL	UPS	Uninterruptible Power Supply
PIPING	UR	Urinal
ELECTRICAL	UV	UV Lights
PIPING	UVIU	Ultraviolet Irradiation Unit
HVAC	VAV	Variable Air Volume Box
PIPING	VBR	Vacuum Breaker
OTHER	VEH	Vehicle
ELECTRICAL	VFD	Variable Frequency Drive
VALVE	VLV	Valve
ELECTRICAL	VM	Video Monitor
PIPING	VT	Vacuum Trap
HVAC	VTR	Venturi Airflow Control VLV

Unless stamped and numbered as a Controlled Copy, the online version is the official version of this procedure. Before using a printed copy, verify that it is the most current version by checking the revision number and effective date against an official copy.

Type	Component Acronym	Component Name
ARCHITECTURAL / STRUCTURAL	WALL	Wall
PIPING	WC	Water Closet
PIPING	WHTR	Water Heater
ARCHITECTURAL / STRUCTURAL	WIN	Window
PIPING	WQM	Water Quality Monitor
PIPING	WS	Water Softener
ELECTRICAL	XFMR	Transformer

Unless stamped and numbered as a Controlled Copy, the online version is the official version of this procedure. Before using a printed copy, verify that it is the most current version by checking the revision number and effective date against an official copy.

Attachment 6 – Labels for Liquid Waste Disposal Systems

Current Label Standard

This attachment is provided as background information about the labels used for access points and to clarify how they are used. It is the responsibility of the Building Manager and/or delegate to label access points. Do to different vendor/supplier of labels there might be a slight difference in color or text. If question arise or a label is discovered that is not on either list please contact ECR or EM.

Drain Connected to Sanitary Sewer System

To be used on sinks/drains (e.g. janitorial) and other drains that discharge directly to the City of Richland sanitary sewer system. This is principally used in laboratories, machine shops, or similar areas where the risk for hazardous discharges exists. It is not intended for kitchen, restroom, drinking fountain, or similar connections within office space.

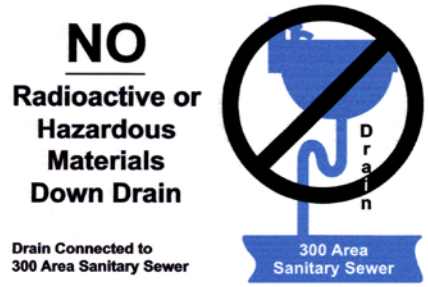

Drain Connected to Process Sewer

To be used on drains connected to the Process Sewer System. This system serves PNNL laboratory spaces. Process sewer wastes are routed to the City of Richland sanitary sewer systems.

Unless stamped and numbered as a Controlled Copy, the online version is the official version of this procedure. Before using a printed copy, verify that it is the most current version by checking the revision number and effective date against an official copy.

Drain Connected to Retention Process Sewer (RPS)

To be used on drains connected to the Retention Process Sewer. This system serves the Physical Sciences Facilities (PSF) and is designed for potentially radiologically contaminated liquid effluents. Retention Process Sewer wastes are routed to the PSF Tank System located in each building.

Drain Connected to Retention Transfer System (RTS)

To be used on drains connected to the Retention Transfer System. This system only serves Building 325 and is designed for potentially radiologically contaminated liquid effluents. Retention Transfer System wastes are routed to the 300 Area Retention Tank System.

Labels for the Marine Science Laboratory in Sequim, WA are given below.

Unless stamped and numbered as a Controlled Copy, the online version is the official version of this procedure. Before using a printed copy, verify that it is the most current version by checking the revision number and effective date against an official copy.

MSL Treated Effluent Drain

To be used on drains at the Marine Sciences Laboratory connected to the Wastewater Treatment Plant where wastewater is treated prior to discharge to Sequim Bay.

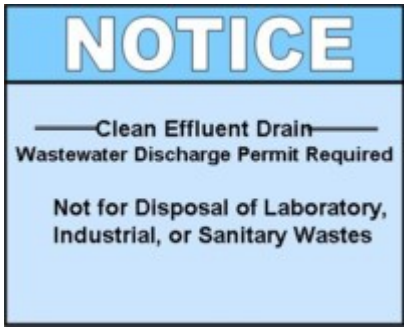

MSL Clean Effluent Drain

To be used on drains at the Marine Sciences Laboratory that discharge to Sequim Bay without any treatment.

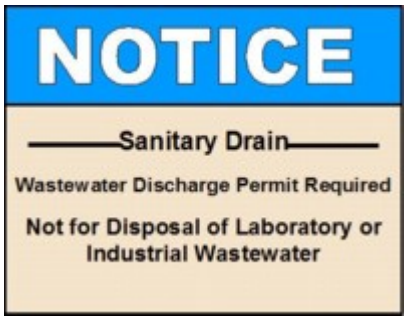

MSL Sanitary Drains

To be used on drains at the Marine Sciences Laboratory that discharge sanitary wastewater to the onsite drain field located at the Uplands Facility.

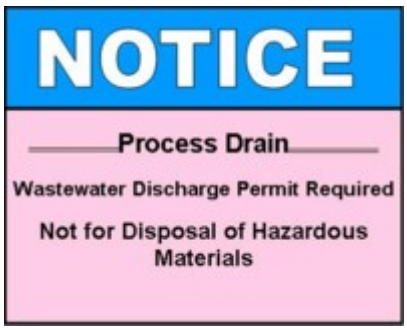

MSL Process Drain

To be used on drains at the Marine Sciences Laboratory Uplands Facility that is connected to the process drain system where water is routed to the Wastewater Treatment Plant for treatment prior to discharge to Sequim Bay.

Out-of-Date Labels

The following labels have been determined to be out-of-date and shown for reference only. If these labels are in laboratory spaces or other locations please contact your Environmental Compliance Representative or Effluent Management to receive a current sewer label.

Unless stamped and numbered as a Controlled Copy, the online version is the official version of this procedure. Before using a printed copy, verify that it is the most current version by checking the revision number and effective date against an official copy.

No Radioactive or Hazardous Materials Down Drain

This label is used if it is uncertain to which sewer system the drain is connected. Contact Effluent Management for assistance in identifying the sewer system connection.

Emergency Eyewash or Shower Drain

Only emergency eyewash or safety shower stations releasing effluent to a sewer system should contain this label and only under the approval of the Environmental Compliance Representative and the individual building manager. This label is not applicable to sinks already labeled for other reasons.

Capped/Plugged Waste System

This label is used for all sinks and drains that have been sealed shut and are totally inaccessible to liquid flow. It's intended to flag and permanently identify locations where waste system entry points are sealed shut. Plugs, caps, or other closures on the main piping systems do not require labeling.

Drains Connected to Open Waterway

To be used on access points to rivers, lakes, bays, or other access points that are connected directly to an open waterway. These are also known as National Pollutant Discharge Elimination System discharge outfalls that do not go initially to a sewer.

Drains Connected to River Outfall

To be used on access points to rivers, lakes, bays, or other access points that are connected directly to an open waterway. These are also known as National Pollutant Discharge Elimination System discharge outfalls that do not go initially to a sewer.

Unless stamped and numbered as a Controlled Copy, the online version is the official version of this procedure. Before using a printed copy, verify that it is the most current version by checking the revision number and effective date against an official copy.

Disconnected Waste Stream

To be used on access points where part or all of the line itself has been removed (e.g., for sinks that have a grate in the bottom to allow for liquid discharge, but are missing a line to connect the access point to the sewer).

Drain Connected to Retention Process Sewer (RPS)

To be used on drains connected to the 300 Area Retention Process Sewer. This system only serves Building 325 and is designed for potentially radiologically contaminated liquid effluents. Retention Process Sewer wastes are routed to the 300 Area Retention Tank System (RTS). Here the effluent is sampled and if found acceptable is routed to the 300 Area sanitary sewer system.

Drain Connected to Process Sewer

To be used on drains connected to the Process Sewer System serving the 318 and 331 Buildings. Process sewer wastes are routed to the 300 Area sanitary sewer system.

Drain Connected to Carboy

To be used on access points that discharge liquid waste directly to a carboy.

Facility Drain Connected to Carboy

To be used on access points in facilities that discharge liquid waste directly to a carboy. All discharge must be inventoried.

Unless stamped and numbered as a Controlled Copy, the online version is the official version of this procedure. Before using a printed copy, verify that it is the most current version by checking the revision number and effective date against an official copy.

	EMSL or PSF Facility Drain Connected to Process Sewer To be used on drains connected to the Environmental Molecular Sciences Laboratory or Physical Sciences Facility process sewer system.
	EMSL Facility Drain Connected to Sanitary Sewer To be used on drains at the Environmental Molecular Sciences Laboratory directly connected to the City of Richland sanitary sewer (e.g., those not discharging directly to the process tanks).

Unless stamped and numbered as a Controlled Copy, the online version is the official version of this procedure. Before using a printed copy, verify that it is the most current version by checking the revision number and effective date against an official copy.

Procedure Revision History

Date	Rev. #	Description
05/22/01	0	New CM procedure.
10/04/01	1	Minor changes have been made to the existing contents of the Systems and Components approved acronyms listings to reflect the Building Engineers changes to their approved acronyms listings.
3/25/02	2	Areas of change were highlighted in red for ease of reading and identification in the review copy only. The acronyms convention from rev-0 has been re-inserted and the MSL acronyms list has been incorporated into this procedure with other up-dates received from Building Engineers for insertion. The MAXIMO driven Engineering cost roll-up sheet for systems labeling cost has been incorporated as Attachment 1. This procedure has been assigned SES No.: RPL-2002-050S.
5/08/02	3	The following changes were made to this procedure, based on discussions with others on how MAXIMO will be used to track maintenance costs. ADDED the following new System Acronyms to this procedure: FFW – Facility Fresh Water, HCV – Heating, Cooling, Ventilation, SFA - Safety & First Aid, and WFW - Waste Fresh Water. DELETED the following System Acronyms from this procedure: AHE - Acid Hood Exhaust, CSW - Chilled Seawater, GRHS - Greenhouse, HSW - Heated Seawater, and SHOP - Maintenance Shop. ADDED7.8.2 Temporary labels should be used until permanent labels can be attached [Interpretation of DOE-STD-1044-93, Section 4.4.2]. **Note:** Temporary labels will: 1) contain the same information as for permanent labels, 2) are adequate to survive in the environment it is applied, and 3) be tracked for replacement with a permanent label/Tag. This procedure has been assigned SES No.: RPL-2002-097S
12/11/02	4	Acronyms were added to this procedure per Service Request S479001. This procedure assigned SES No.: **RPL-2003-20**
5/08/03	5	Note, all changes made to this document are in Blue font for ease of review. Added sections 7.9.6 & 7.9.7 and a Note on page 9. Attachment 3, Systems Acronyms Listing in Alphabetical Order and Attachment 4 Components Acronyms Listing in Alphabetical Order. This procedure assigned SES No.: **RPL-2003-113S**
11/3/03	6	(Major Change) <u>Reformatted to the ADM Macro form</u> and made the following changes per ME Olson e-mail dated 10/7/03, to sections; 7.1.1, 7.1.2, 7.2.1, 7.3.1, 7.8.1, 7.8.2, 7.8.3, 7.9.2, 7.9.3, 7.9.4, 7.9.5, 7.9.6, 7.10.1. Added to 8.0 References & Source Requirements and 9.0 Attachments. Added SAC (Screw-adjusted Clamp) to the components acronyms list. This procedure assigned SES No.: RPL-2004-009S
3/17/04	7	Updated document throughout including system and component acronyms per Building Engineers. Added label color column to system acronyms list. (jms)
12/27/05	8	• Due to the Fall 2005 reorg of FOD, new signatures were requested by FOD management. No further changes were requested. • Categorical Exclusion: RPL-2004-194, FG Buck (USQE). DEF/LEF
3/15/06	9	• Updated signature for Facility Management North lead (acting) – CJ Nichols. (lef) • CE: RPL-2004-194D. FG Buck USQE.
7/25/07	10	• Biennial Review/major revision.

Unless stamped and numbered as a Controlled Copy, the online version is the official version of this procedure. Before using a printed copy, verify that it is the most current version by checking the revision number and effective date against an official copy.

Date	Rev. #	Description
		• Change EQID format to "Bldg/System/Component/ Component Number" • Require barcode on all labels • Add information on MAXIMO CMM software database • Add Arc Flash Labeling information • Attachment 1, updated bar code label samples. • Update acronym lists and added two additional sort by acronym lists, Attachments 2 and 4. (DRS/lef) • SES: RPL-2007-127S (FB)
10/25/07	10	Section 7.12.1: corrected the reference of ASME to read: American Society of Mechanical Engineers (ASME) 13.1-2007. Section 8.0: added reference to ASME 13.0-2007. Component acronym lists: added the following acronyms to the lists: HB –Hose Bib; UR-Urinal; L-Lavatory; FRZ-Freezer; CPU-Central Processing Unit; ECS-Emergency Call Station –replaced CALL on the list; PVAC-Portable HEPA Vacuum Cleaner; PCM-Personnel Contamination Monitor; HFC-Hand and Foot Counter; HBOX-Hot Box; DALK-Dealkalizer; DAIR- Deaerator and updated SH to Safety Shower or Shower. DRS/lef CE: RPL-2004-194D. FG Buck/USQE.
7/1/09	11	• DSA review and update completed by Nancy Maguire-Moffitt and Dave Brown. • Updated terminology for Building Engineer/System Engineer (BE/SE). • Reformat. (lef)
10/20/10	11	Attachment 3: added new system in Architectural – Shielded Confinement. Attachment 4; added new component HC, Hot Cell. Page 27, added new Architectural/Structural Component HC/Hot Cell. (dmb/lef) RPL-2008-087D
11/4/10	11a	Page 18, added new acronym for dual temperature "Water". Pages 22 & 29, added new acronym for Snubber/Instrumentation. (db/lef)
12/1/12	12	Added new system and component names. Clarified what components receive asset numbers. Clarified FRB requirements for asset numbers. Added label requirements for liquid effluent users.

Unless stamped and numbered as a Controlled Copy, the online version is the official version of this procedure. Before using a printed copy, verify that it is the most current version by checking the revision number and effective date against an official copy.

Instruction Manual

for your
Haskris system

100 Kelly St. • Elk Grove • Village IL 60007 • Ph:847-956-6420 • Fx:847-956-6595 • sales@haskris.com • www.haskris.com

Table of Contents

1.0 PRELIMINARY INFORMATION
1.1 Technical Support 1
2.0 INSTALLATION
2.1 Unpacking 2
2.2 Proper System Location 2
2.3 Leveling Legs 2
2.4 Electrical Power 3
2.5 Circulating Water Connections (Supply and Return) 3
2.6 Building Water Recommendations 4
3.0 SYSTEM START-UP
3.1 Water Tank Filling 6
3.2 Water Pump Priming 6
3.3 Liquid Refrigerant Removal 8
3.4 Final Inspection 9
4.0 OPERATION
4.1 Temperature Control 10
4.1.1 Adjusting the Supply Water Temperature 10
4.1.2 Controller Selection 10
4.1.3 Electronic Temperature Control (Accessible A419 Thermostat) 11
4.1.4 Electronic (PID) Controller 11
4.1.5 Manual Temperature Control 12
4.1.6 Manual Close-Temperature Control 12
4.1.7 Electronic PID or Temperature Controller 13
4.1.8 Electronic (PID) Controller (small) 13
4.1.9 Electronic ON-OFF Controller 13
4.2 Water Pressure Bypass Valve 14
4.3 Refrigerant Sight Glass/Moisture Indicator (Refrigerated Sys. Only) 15
4.4 Refrigerant Pressure Control (Refrigerated Sys. Only) 15
4.4.1 Refrigerant Compressor Troubleshooting 16
4.5 Water Level "Full" Pilot Light 17
4.6 Option (A) Flow Meter 17
5.0 MAINTENANCE
5.1 Water Storage Tank 18
5.1.1 Tank Inspection 18
5.1.2 Frequency of Water Changes 18
5.1.3 Biological Growth 18
5.2 Air-Cooled Condenser 18
5.3 Pump Motor Lubrication 19
5.4 Strainers and Filters 19
5.4.1 Nylon Suction Strainer 19
5.4.2 Supply Line Filters (as applicable) 19
6.0 STANDARD PRODUCT WARRANTY 29
SERVICE NOTES (Blank Log Sheet) 22

1.1 Technical Support

If at any time you have questions, encounter problems or need spare parts for your Haskris system, please contact us by any of the following means:

Phone: 001-847-956-6420
Fax: 001-847-956-6595
Email: service@haskris.com
Website: www.haskris.com

Our website contains information addressing frequently-asked questions, trouble-shooting guides, and technical documentation.

NOTE!

When contacting Haskris, have the *Serial Number* (located on the front cover of this manual, or on your Haskris system) available when you call. The serial number enables us to address problems quickly and effectively.

2.1 Unpacking System

Upon delivery, visually inspect your Haskris system for any obvious damage. If damage is found, and there is reason to believe the system was mishandled, note the damage in detail on the delivery receipt. We recommend taking photographs if possible. Contact the delivering carrier immediately to file a claim. All shipping containers and packaging materials should be retained to help substantiate the claim. We also ask that you call Haskris if the system has been damaged in shipment. We will assist in rectifying the situation.

2.2 Proper System Location

This Haskris system is designed for use in a clean, indoor environment, unless a custom design for other environmental conditions was specified.

Position the system for clear access to the front panel, where all controls, indicators and readouts are located. Access to the top and side panels is required to fill the reservoir or to perform maintenance and repair procedures.

Water-Cooled Systems: For systems with water-cooled condensers or systems with water-cooled heat exchangers:

These systems are designed to circulate clean, temperature-controlled water through your equipment, while making use of an existing source of *building water* as a means of dissipating heat. As a result, no heat will be introduced into the room. (Building water may be any source of cold water, including city/tap water or in-house chilled water.)

Air-Cooled Systems: For systems with air-cooled condensers:

Acceptable ambient air temperatures are shown in Table 1. Provide sufficient clearance, front and back, to allow for free movement of air across the condenser. A lack of cool/fresh air to the condenser will result in reduced cooling capacity, and possibly the complete shutdown of the refrigeration compressor.

Avoid dusty areas, and periodically check to make sure that the condenser is clean (refer to Section 5.2 for cleaning instructions).

TABLE 1
Ambient Temperature Ranges for Air-Cooled Condensers

MODEL	AMBIENT TEMPERATURE RANGE*	
	Fahrenheit (°F)	Celsius (°C)
R025 – R175	55 – 90	13 - 32
R250 – R1000	40 - 100	4 - 38

* Note: Table 1 does not apply to systems equipped with Options I (for high-temperature ambient air applications) and/or Option J (for low-temperature ambient air applications).

2.3 Leveling Legs

If your Haskris system does not come with lockable casters, the system will need to be leveled according to the following procedure. First, remove the four 3/8" hex-head bolts that secure your system to the wooden shipping base. Then attach the factory supplied 3/8" leveling-legs into each corner of the metal base by screwing them in a clockwise direction; adjust the length for leveling as required. Finally, reattach the 3/8" hex nuts (supplied with the leveling-legs) to lock the legs into place.

2.4 Electrical Power

Please refer to the nameplate label on the front cover of this manual for electrical requirements; a copy of the nameplate can be also found on the Haskris system. The wiring diagram for your Haskris system is attached to the inside of the system (usually on the water tank).

NOTE!

We recommend contacting a licensed electrician to perform the electrical installation. These professionals are familiar with local electrical codes and will be aware of specific requirements that apply to your area.

We recommend a service disconnect switch and time delay fusing be installed, per the wiring diagram, found inside your Haskris. Your system will either use single-phase power with a power cord, single-phase power without a power cord, or three-phase power. Single-phase power will include a power cord unless the recommended fuse size is in excess of 20 Amps.

Systems With a Power Cord: Plug the system in as you would any electrical appliance, making sure to follow the Proper System Location guidelines as outlined in Section 2.2.

Systems Without a Power Cord: (Applies to both single-phase and three-phase systems.) If your system is not supplied with a power cord, check the nameplate label on the cover of the manual (or on the rear panel of the system) to determine if the Haskris system is single-phase or three-phase. Run main power to the top of the compressor contactor (we have attached a “Main Power” label to this contactor for easy identification.) Have your electrician ensure that the proper wiring is installed in the room/area in which your Haskris system will be located.

Correcting Motor Rotation in Systems Using 3-Phase Power

A licensed electrician should interchange any two wires of the three-phase power source ***at the disconnect switch*** to correct improper pump rotation or improper phase displayed by the phase monitor, if necessary. Contact Haskris for any questions.

2.5 Circulating Water Connections

Supply and Return Lines

All interconnecting hose and piping should be run at the same size as the connections to minimize external pressure drop. We suggest the use of high-pressure hose for the entire installation, or the use of copper piping for long runs. If copper piping is used, a short segment of hose should be used at each connection point to absorb vibration. Copper piping/tubing (and hose in some instances) should be insulated to prevent condensation.

Haskris recommends that an opaque, 150 psi minimum rated, reinforced EPDM hose be used between the Haskris system and the equipment being cooled, so that no light is introduced, thus minimizing biological growth. Hard piping has to be used if the system pressure is above 100 psi. Check with building requirements and contact Haskris, if you have any questions.

2.6 Building Water Recommendations

To ensure the reliable operation of water-cooled systems:

- Furnish building water to the Haskris with piping ID (inside diameter) equivalent to or larger than the connection sizes furnished by Haskris.
- Provide a minimum differential pressure of 25 psi and maximum differential pressure of 50 psi between the building water inlet and outlet.

Figure 2-1 Label is typically located at rear base of the Haskris unit.

- Maximum inlet pressure is 100 psi (6 bar), unless otherwise specified under Option (K). Be sure to check back pressure on the outlet side. A high inlet pressure alone will not ensure adequate flow. Connect building water per Figure 2-1 above.
- Required differential pressure will vary among installations, depending on the temperature of the source water and the type of condenser furnished (refer to Chart 1).
- Install a hand valve in an accessible location in the building water inlet and outlet lines. A plumbing "Y" strainer, with an 80 mesh screen at the inlet, instead of a filter, is also recommended to limit debris from entering the water regulating valve and the water-cooled condenser.
- In-line filters are not recommended. They clog easily and restrict water flow, reducing chiller cooling capacity. This leads to compressor cycling on the refrigerant pressure control, or in newer systems, requiring a manual reset of the refrigerant pressure control.

Table 2 Condenser Water Quality Information

Component	Allowable Quantity
Iron	<3 ppm
Manganese	<3 ppm
Aluminum	<0.1 ppm
Free Carbon Dioxide	5 ppm
Ammonia	2 mg/L
pH	>8
Dissolved Oxygen	<3 ppm
Sulfate to Chloride Ratio	<3:1

Automatic Water Regulating Valve

Your Haskris unit will control building water flow through the water-cooled condenser by means of a modulating, pressure-actuated water regulating valve (see Figure 2-2).

Function

This valve maintains factory set operating refrigerant pressure in the condenser. It also modulates building water flow to a minimum of usage when the refrigeration system is running, and it automatically shuts off the building water when the compressor cycles OFF.

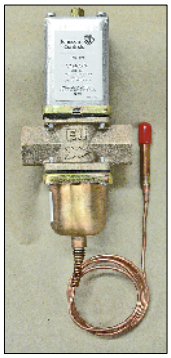

Figure 2-2 Automatic Water Regulating Valve

CAUTION! The water regulating valve can easily be damaged by water flowing in the reverse direction (see arrow on casting) or rough treatment of the capillary tube which senses refrigerant pressure. The valve should not require field adjustment; it has been adjusted and tested prior to shipment.

2.6 Building Water Recommendations (cont.)

Hot Gas Bypass

The automatic water regulating valve modulates closed when the compressor stops running, conserving water. Systems equipped with hot gas bypass [Option (G) or Option (H)] have a continuously running compressor, requiring a constant flow of building water through the water-cooled condenser.

Condenser Selection

The curved plot in Chart 1 below indicates safe water velocities per manufacturer recommendations for the two condenser types shown. The plot assumes 100% water. A shell and coil condenser is not designed to be used for water temperatures above 78°F.

Chart 1 - Building Water Flow

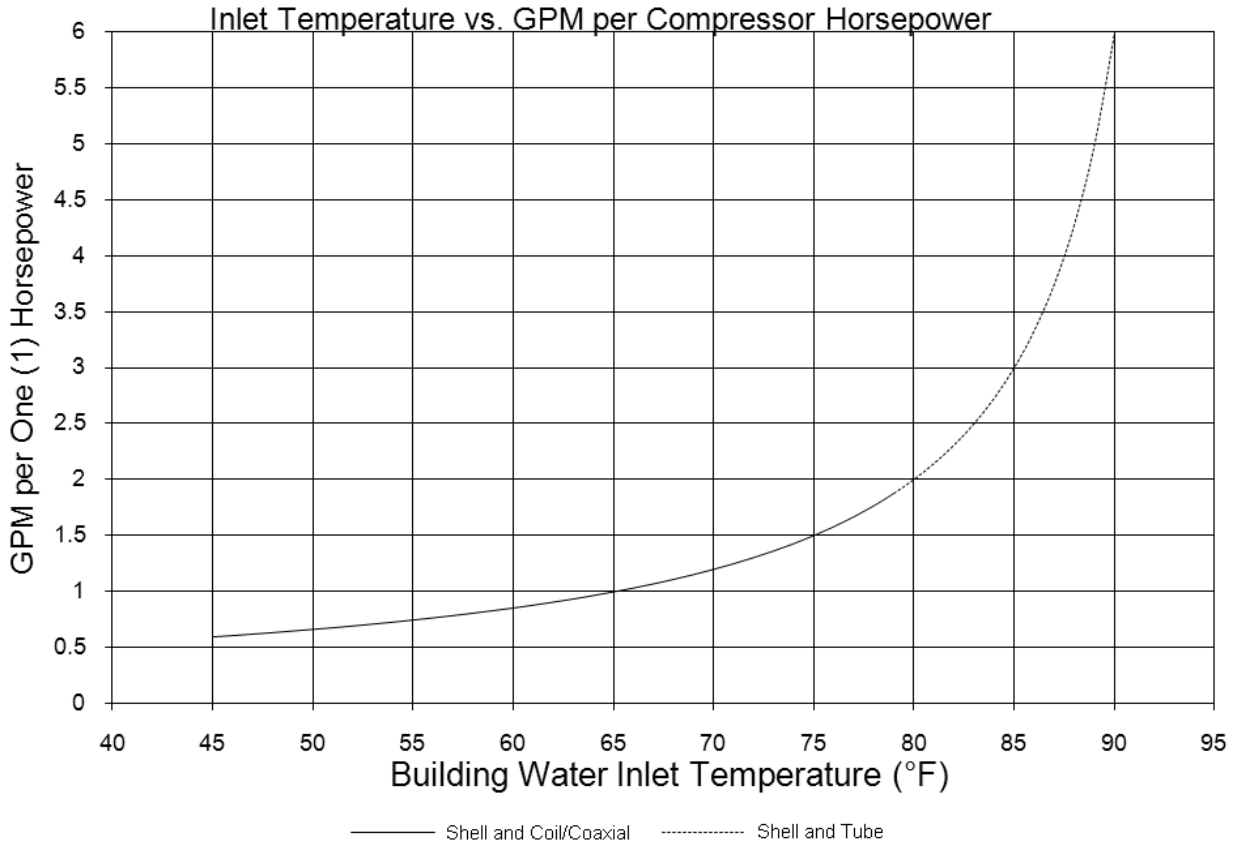

3.1 Water Tank Filling

1) Carefully remove the packing paper from the inside of the water tank.

2) Fill the tank with clean, potable (drinkable) distilled water.

3) Stop filling when the water level is just below the piping bulkhead fittings near the top of the tank and above the heat exchanger (Fig. 3-1).

Figure 3-1 Tank Fill Level

3.2 Water Pump Priming

Systems with a PD Pump

1) Lift the suction strainer out of the tank and remove it from the hose by loosening the hose clamp (Fig. 3-2).

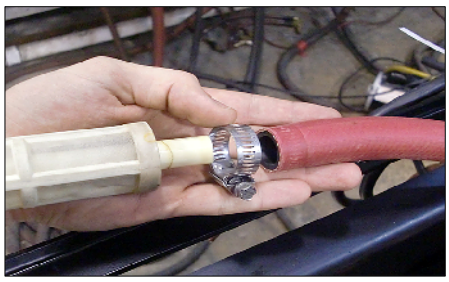

Figure 3-2 Suction Strainer Removal

2) Pour potable (drinkable) distilled water into the hose to fill the pump (Fig. 3-3).

3) When the water reaches the top of the hose, place your thumb over the end of the hose, and submerge the hose into the water. Doing this ensures the water stays inside the hose.

Figure 3-3 Priming the Pump

4) Replace the suction strainer and secure the hose clamp.

Systems with a Turbine Pump

To properly prime your Haskris turbine pump, complete the following steps:

1) Turn the power off to the chiller and disconnect its power cord from the wall.

2) With the water tank filled as described in section 3.1, locate the air vent plug on the head of the pump, as shown circled in Figure 3-4. The air vent screw opening is shown in Figure 3-5.

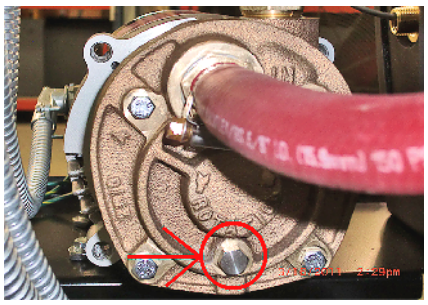

Figure 3-4 Priming Air Vent Screw

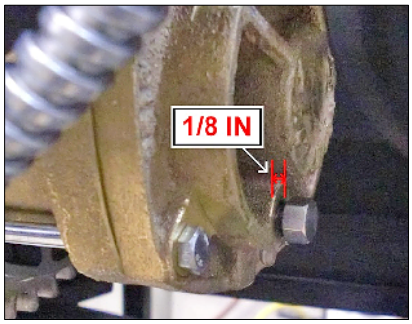

Figure 3-5 Air Vent Screw Opening

3.2 Water Pump Priming (cont.)

3) Use a 7/16” wrench to loosen (counter-clockwise) the vent plug enough to allow water to exit through the threads without vent plug removal.

4) During the priming process, a small amount of water will drip from the screw hole. This purges the air from within the pump head. To avoid spillage, place a small paper towel under the pump head (Fig. 3-6).

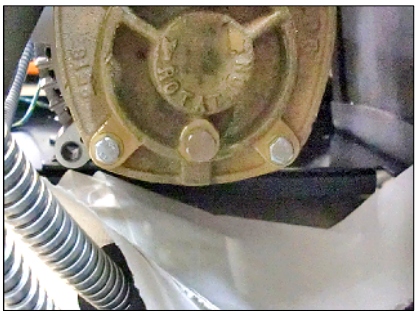

Figure 3-6 Paper Towel Placement

5) Remove the suction strainer (Fig. 3-2 previously) and hose from the tank.

6) Loosen the hose clamp with a flat head screwdriver and remove the suction strainer from the end of the hose. If suction strainer is not present proceed to step 7.

7) Raise the hose in the air and pour water into the hose (Fig. 3-3 previously).

8) Continue pouring water until there is a steady drip from the priming air vent plug and the hose is full, then securely tighten the vent plug (clockwise).

9) If applicable, replace the suction strainer on the end of the hose and securely tighten the hose clamp.

10) Replace the strainer and hose into the tank (Fig. 3-7). Proceed to step 11 if the strainer is not present.

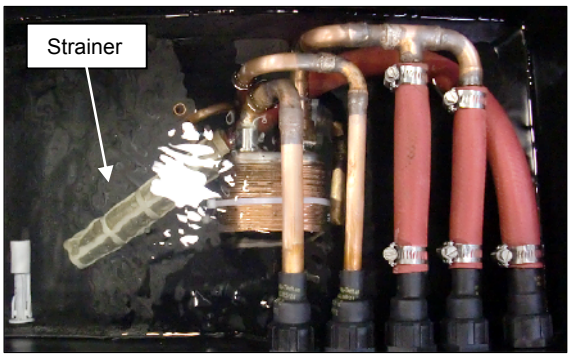

Figure 3-7 Suction Strainer Placement for R175

11) Plug the chiller power cord into the wall and reconnect power to the chiller.

12) When the pump runs, verify that there is proper flow through the system piping.

13) Add water to the tank as necessary to maintain the level above the heat exchanger and below the bulk head fittings.

14) Check for leaks.

15) Continue with the remainder of the startup procedures.

3.2 Water Pump Priming (cont.)

Systems With Primary/Standby Pumps

1) Lift the strainer out of the tank and remove it from the hose by loosening the hose clamp (Fig. 3-2 previously).

2) Pour potable (drinkable) distilled water into the hose to fill each pump (Fig. 3-3 previously).

3) When the water reaches the top of the hose, place your thumb over the end of the hose and submerge the hose in the water. Doing this ensures that the water stays inside the hose.

4) Turn pump 1 on and depress the Schraeder valve on the pump discharge until a solid stream of water emerges (Fig. 3-8). Once complete, turn on pump 2 and follow the same steps. This will allow water to fill the circuit and remove all the air from around the check valves.

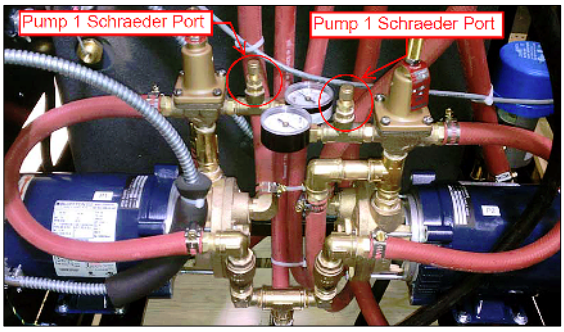

Figure 3-8 Primary/Standby Two-Pump Chiller with Schraeder Valves

3.3 Liquid Refrigerant Removal

(Refrigerated Systems Only)

Liquid refrigerant may accumulate inside the compressor during shipping, especially when during cold ambient temperatures. During start-up, it is important to remove liquid refrigerant from the compressor to prevent damage to the compressor valves. This can be accomplished by using the ON-OFF switch. For systems using a timer as the on/off mechanism, cycle between the HOLD and OFF positions.

1) Turn the system power On until the compressor starts.

2) Turn the system Off and On 3 or 4 times before switching the system On permanently.

Crankcase Heater

To keep liquid refrigerant out of the compressor when the system is shut down for an extended period of time (overnight and during the weekend), Platforms R075 through R1000 include a crankcase heater that will evaporate any liquid refrigerant in the compressor. As long as main power is supplied to the Haskris system, the crankcase heater will be energized, even if the ON-OFF switch is in the OFF position.

Platforms R025 through R050 do not require or include crankcase heaters.

3.4 Final Inspection

Water Tank Level

Once the system is ON, the water pump will fill the closed loop with water and remove all the air in the process. As the interconnecting hose and pipe fill with water, the level in the storage tank will drop. You should have an extra supply of water on hand to replenish the storage tank level as necessary.

Leaks and Line Debris

Check to make sure all external piping is leak-tight and that the system is operating satisfactorily. During initial operation the circulating water will flush debris from the closed loop and deposit it into the storage tank. If necessary, drain the tank and refill it with clean water. A convenient gravity drain has been provided on the underside of the tank for this purpose.

Inspection for Algae

Check the system after one week of operation. If algae start to form (be sure to check the pump strainer too), the system will need to be cleaned and disinfected before refilling with clean, potable (drinkable) distilled water. Please keep in mind you need the instrument manufacturer's approval before using any water additive formulated to minimize biological growth in the cooling water. Consult Section 5 of this manual (or the Haskris website) for maintenance recommendations, flushing instructions and/or recommendations on approved additives for use in Haskris systems.

4.1 Temperature Control

4.1.1 Adjusting the Supply Water Temperature

1) Match the appropriate control mechanism for your Haskris system with the pictures in Section 4.1.2, Table 4-1.

2) Note the section for adjustment instructions for the controls that match your system.

3) Turn to the appropriate section and follow the designated instructions.

NOTES:

Temperature is Pre-Set: Haskris has pre-set the supply water temperature per your specifications. On initial start-up, apply the actual heat load and wait 15-30 minutes for the temperature to stabilize.

Allowable Adjustments: The following procedures are intended for supply water temperature adjustments only. All other control parameters are factory set for optimum performance and should not be adjusted. If it appears that “tuning” is required, please contact Haskris for further information.

Adjust While System is Running: Make all water temperature adjustments while the system is running under the actual heat load.

Permissible Temperature Settings: The permissible supply water temperature range is 55 to 70°F (13 to 21°C.) If a temperature setting outside of this range is required, please contact Haskris and we will advise you of precautions and the proper procedures to follow.

Response Time for Adjustments: While each Haskris system varies, and individual design specifications may call for a rapid response in temperature adjustment, owners of systems with common configurations should allow up to 15 minutes for any temperature adjustments to take effect. This is due to the thermal mass of the system and the nature of the cooling system.

Condensation Reminder: Setting the supply water temperature below the room dew point will cause condensation to form on the surfaces of the equipment being cooled, with resultant damage. Insulate the cooling water lines if the ambient temperature in the room is below the dew point in the room. Consult a dew point chart to calculate the dew point in your environment.

4.1.2 Controller Selection

Select the controller from Table 4-1 on the next page that matches the one in your system and follow the instructions in the designated section.

4.1 Temperature Control (cont.)

Table 4-1 Selection Guide
Common Temperature Control Options

Controller	Instruction Section	Identifying Photograph(s)
Electronic Temperature Control *(Accessible A419 Thermostat)*	Section 4.1.3	
Electronic ON-OFF Controller	Section 4.1.9	
Electronic (PID) Controller (Small)	Section 4.1.8	
Electronic (PID) Controller (Large)	Section 4.1.4	
Manual Temperature Control for Non-Refrigerated Systems	Section 4.1.5	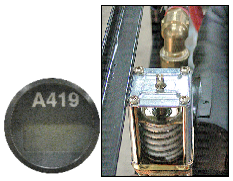
Manual Close-Temperature Control Option (G) for Refrigerated Systems	Section 4.1.6	
Electronic PID or Temperature Controller	Section 4.1.7	

4.1.3 Electronic Temperature Control
(Accessible A419 Thermostat)

Water temperature is controlled by an adjustable thermostat. It senses tank water temperature and is preset to turn the refrigeration compressor OFF at your requested set-point. The ON temperature has been preset 4°F (2°C) higher, fixing the temperature cycling differential at plus/minus 2.0°F (plus/minus 1.1°C).

To view and adjust the temperature set-point follow these steps:

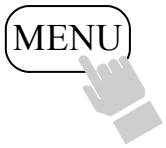

1) Press and hold the MENU button until the display changes to flashing “SP” (set-point). This will take about 2 seconds. Note: If no entries are made for 30 seconds, the control reverts back to the temperature display.

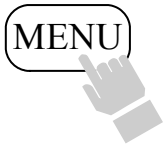

2) Press the MENU button again. The current set-point is displayed.

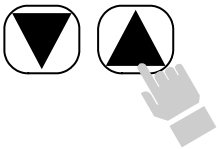

3) Press the UP or DOWN arrow buttons to adjust the temperature set-point.

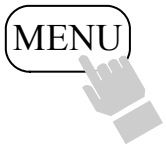

4) Press the MENU button to save the new set-point. The display then returns to indicating the actual reservoir temperature.

Note: If the MENU button is not pressed after changing the set-point (as step 4 above), the controller reverts back to the set-point value that was previously programmed.

4.1 Temperature Control (cont.)

4.1.4 Electronic (PID) Controller

Press the UP or DOWN arrow button to adjust the temperature set-point. Set-point (SV) will be displayed on the lower display. See Main Display.

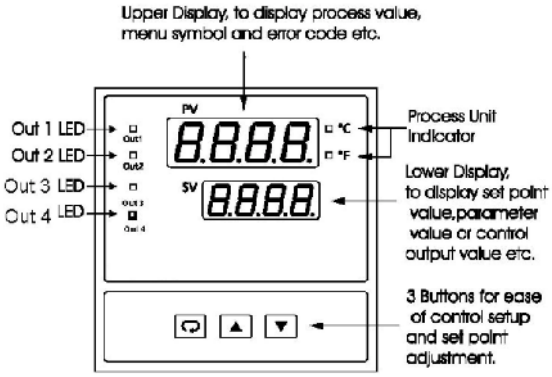

4.1.5 Manual Temperature Control

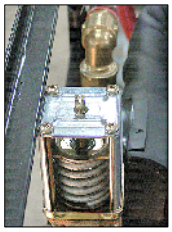

(for Non-Refrigerated Systems with Modulating Valve and Inaccessible A419 Thermostat)

Water temperature is controlled by a modulating valve installed in the cooling water circuit. This valve varies the flow of cooling water to maintain a constant supply water temperature to the equipment being cooled. When the heat load is removed, it will modulate toward a closed position.

Adjustment Procedure

1) Locate the adjustment screw of the valve which is visible through the system lid and labeled “Modulating Water Temperature Control Valve.”

2) To lower the supply water temperature, use a screwdriver to turn the adjustment screw clockwise. To raise the supply water temperature, turn the adjustment screw counterclockwise.

4.1.6 Manual Close-Temperature Control

Option (G) for Refrigerated Systems with Hot-Gas Bypass Valve and Inaccessible A419 Thermostat

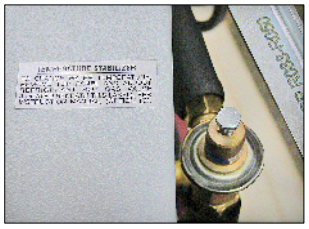

In the case of a malfunction of the bypass system, or a sharp reduction in the heat load, the freeze-protection thermostat serves as a back-up control that will cycle the compressor approximately 10°F (6°C) below the design temperature of the supply water.

If the actual heat load is less than the heat load used by Haskris to set the supply water temperature, the resultant supply water temperature will be lower; conversely, if the heat load is greater, the supply water temperature will be higher.

Adjustment Procedure

1) Loosen the lock-nut at the base of the adjusting stem of the hot gas bypass valve.

2) Turn the stem clockwise to raise, or counterclockwise to lower the supply water temperature. We suggest one-quarter turn for each 2.0°F (1.1°C) adjustment.

3) Wait at least 15 minutes to see if the desired temperature has been reached before making the next adjustment.

4.1 Temperature Control (cont.)

4.1.7 Electronic PID or Temperature Controller

Adjustment Procedure

The upper display of the control is the actual measured temperature of the supply water. This is referred to as the PV (Process Value). The lower display is the desired supply water temperature that the Haskris system will try to maintain. This is referred as the SV (Set-point Value).

1) To adjust the SV press either the up or down arrow key until the lower display indicates your desired supply water temperature.

2) Once the desired supply water temperature is reached, press to finalize the SV selection. The SV value will stop flashing when the new value is entered.

4.1.8 Electronic (PID) Controller (small)

Adjustment Procedure

The upper display of the control is the actual measured temperature of the supply water. This is referred to as the PV (Process Value). The lower display is the desired supply water temperature that the Haskris system will try to maintain. This is referred to as the SV (Set-point Value). To adjust the SV press either the up or down key until the lower display indicates your desired supply water temperature.

4.1.9 Electronic ON-OFF Controller

Water temperature is controlled by an adjustable thermostat. It senses tank water temperature and is preset to turn the refrigeration compressor OFF at the appropriate point for your application. The ON temperature has been preset 4°F (2°C) higher, fixing the temperature cycling differential at plus/minus 2.0°F (plus/minus 1.1°C).

Adjustment Procedure

1) Press and release the “SET” button. SP (Set-Point) text appears on the display.

2) Press the “SET” button again. Temperature set point value is shown on the display.

3) Modify the temperature set-point value using the UP and DOWN arrow keys.

4) Press the “SET” and “DOWN” arrow key simultaneously to quit programming, or wait one (1) minute for the TIMEOUT.

4.2 Water Pressure Bypass Valve

Your system is provided with *one* of the four types of bypass valves shown below, depending on the flow rate requirements of your system. These valves modulate and do not snap open and closed.

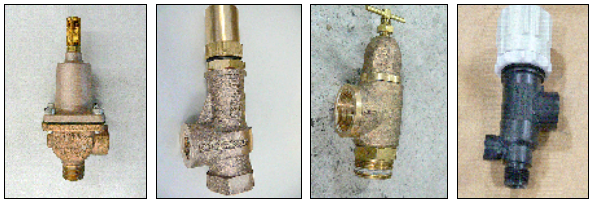

Figure 4-1 Bypass/Relief Valve Styles

Valve Functions

1) Its primary function is to divert the water pump discharge flow whenever the pump pressure reaches the bypass pressure setting. The water is diverted through the bypass line, through the cooling coil and into the storage tank. This reaction occurs when the closed-loop becomes restricted, such as when a solenoid valve on your equipment closes, or some other flow restriction develops. The bypass would also open if the pressure relief setting was not set above the required pressure to overcome the resistance to flow (pressure drop) in the closed loop.

2) As a secondary function, the valve can be used for partial-flow diversion. If the flow characteristics of the pump cause excessive pressure drop through the heat exchanger on the equipment being cooled, this valve can be adjusted to bypass some of the excess water. This reduces the flow through the equipment, thereby reducing the pressure required to complete the circuit.

Relief Valve Adjustment Procedure

The valve has been preset for a maximum pressure in order to limit the pressure of the cooling water flowing to your equipment. An adjustment screw is located under the knurled brass cap or on top of the valve.

1) Loosen the locking nut at the base of the adjustment stem.

2) Rotate the screw inward (clockwise) to increase the water pressure required to open the valve, or rotate the screw outward (counter-clockwise) to decrease the water pressure required open the valve.

NOTE!

When rotating the screw outward to decrease the water pressure, make sure you do not completely remove the screw; this prevents the valve from leaking.

3) Tighten the locknut at the base of the adjustment stem.

NOTE: To find the pressure setting of the bypass valve, restrict the flow of supply water from the Haskris system (completely pinch the hose or close the supply hand valve if supplied). The pressure gauge will then indicate the valve set-point.

As noted above, the valve does not snap open and closed. It will crack open at approximately 10-15 psi (0.7-1.0 bar) below its set-point, depending on the valve. The valve continues to open gradually, increasing the amount of bypass, as pressure approaches the valve set-point. When the set-point is reached, all of the flow from the pump is being bypassed. For this reason the valve should be set, at minimum, to 15 psi (1.0 bar) above the normal operating pressure to ensure full flow of the pump through the closed loop.

4.3 Refrigerant Sight Glass/ Moisture Indicator

(Refrigerated Systems Only)

A liquid-line sight glass/moisture indicator has been installed to help you identify when the system is low on refrigerant and to assist the refrigeration mechanic when recharging the system.

The sight glass/moisture indicator is located near the bottom of the system and is visible when the service panel is removed, as shown in Figure 4-2. When the compressor is running, bubbles flowing through the sight glass indicate that the Haskris system is low on refrigerant.

Figure 4-2 Sight Glass

Turbulence and bubbles inside the sight glass are normal immediately after the compressor turns on, and immediately after it turns off. The sight glass should be clear when the compressor is energized and running.

4.4 Refrigerant Pressure Control

(Refrigerated Systems Only)

The refrigerant pressure control is a safety device. The refrigerant pressure control de-energizes the compressor motor when refrigerant operating pressures are outside the safe limits set by Haskris. The pressure control (Fig. 4-3) can be found at the base of the Haskris system, near the front, and can usually be seen through the front grill.

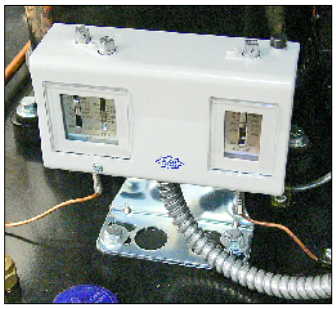

Figure 4-3 Refrigerant Pressure Control (Dual model shown)

NOTE!

Changes to the safe operating limits should only be made with refrigerant pressure gauges installed on the high and low-side of the refrigeration system by a qualified refrigeration technician.

Low Pressure Control

All refrigerated platforms include a low pressure control. This control, whether single or part of a dual control, de-energizes the refrigerant compressor when a significant amount of refrigerant has leaked out of the system, or when a restriction has occurred in the refrigeration circuit. The low pressure control also serves as an added level of freeze-protection. The low pressure control automatically resets when the refrigerant pressure increases to a safe level.

High Pressure Control

All refrigerated platforms with water-cooled condensers, air-cooled R175 and larger platforms, and platforms furnished with remote air-cooled condensers include a high-refrigerant pressure safety cutout with manual reset (all remaining platforms include an automatic reset.) The high pressure control de-energizes the refrigerant compressor when there is insufficient building water flow through a water-cooled condenser or insufficient airflow through an air-cooled condenser. The high pressure control must be manually reset after the refrigerant pressure decreases to a safe level.

4.4.1 Refrigerant Compressor Troubleshooting

If the compressor is short-cycling (turning on and off rapidly), or if the compressor will not come on at all when cooling is required, it is likely the refrigerant compressor has been safely locked out by the refrigerant pressure control. Refer to the sections below for further troubleshooting advice, or contact Haskris Co. at 847-956-6420.

Platforms with Air-Cooled Condensers
(R175 or Platforms with Remote Condensers only)

To restart the compressor:

1) Confirm that ambient air temperature is within range (see section 2.2).

2) Check that the condenser fins are clean and allow ambient air flow through the condenser.

3) Verify that the inlet to condenser is at least 8” from the wall.

4) Confirm that hot air is not being directed to the condenser inlet from another application and that water is being circulated by the pump (pressure gauge shows discharge pressure or other means)

5) Manually reset the refrigerant pressure control by pressing the black reset button on top of the dual pressure control unit.

Platforms with Water-Cooled Condensers

All Haskris platforms furnished with a water-cooled condenser include a Building Water Fault Indicator (see schematic below).

The building water fault indicator illuminates when an insufficient flow of building water through the water-cooled condenser has occurred. This safety feature de-energizes the mechanical refrigeration compressor.

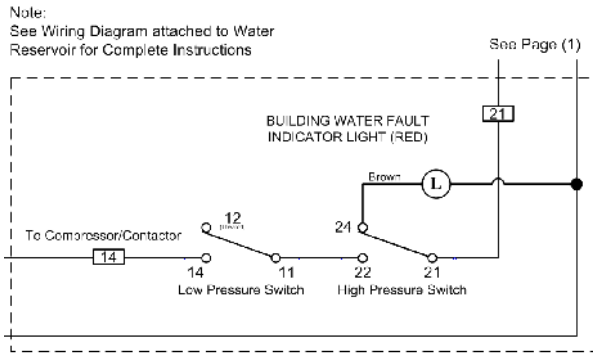

Figure 4-4 Water Fault Indicator Schematic

To Restart the compressor After a Fault

1) Investigate the source of insufficient building water flow.

Possible Sources	Action
Dirty strainer on the building water (do not use a filter)	Clean strainer and/or Contact Facilities
Unplanned building water shutdown	Contact Facilities
Imbalanced condition in a building water loop (sudden change of differential pressure and/or temperature)	Contact Facilities

2) After the insufficient flow issue is identified and resolved, press the manual reset button on top of the high refrigerant pressure safety cutout, which is located at the bottom of the chiller behind the front panel.

4.4.1 Refrigerant Compressor Troubleshooting (cont.)

2)The refrigeration compressor should restart. If the compressor will not start, there may still be a fault condition in the building water circuit. Please contact Haskris if you have difficulty resolving this fault condition.

Systems with Option (B) or (N)

If Option (B) or Option (N) is installed on your Haskris system, you may need to reset the high-water temperature safety to a temperature above that of the water in the reservoir to re-start the pump motor. Contact Haskris at 847-956-6420 if persistent building water faults occur at your location or if you have any questions about these features or require assistance.

4.5 Water Level "Full" Pilot Light

For your convenience, a pilot light has been installed on the control panel (Fig. 4-5).

NOTE!

The storage tank is sufficiently filled when the pilot light is on. When the light is off, the storage tank water is below the recommended operating level. Refill the tank according to the instructions in Section 3.2.

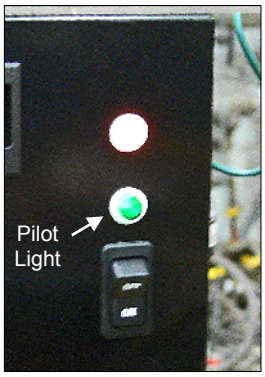

Figure 4-5 Water Level Pilot Light

Refrigerated systems with 5, 6 or 9 gallon (19, 23 or 34 liter, respectively) tanks are furnished with a liquid-level interlock relay. When the water level drops, the liquid level interlock relay opens, shutting the system down (refer to the wiring diagram located inside your Haskris system, on the tank).

4.6 Option (A) Flow Meter

Many OEM configured Haskris systems include Haskris Option (A), Flow Meter, providing a visual display of the cooling water flowing to or from the application. To determine the volumetric flow, read the graduated scale at the widest part of the float.

Remember, some of the flow can be diverted through the water pressure bypass valve. See section 4.2 Water Pressure Bypass Valve to determine if any cooling water is flowing through the bypass valve.

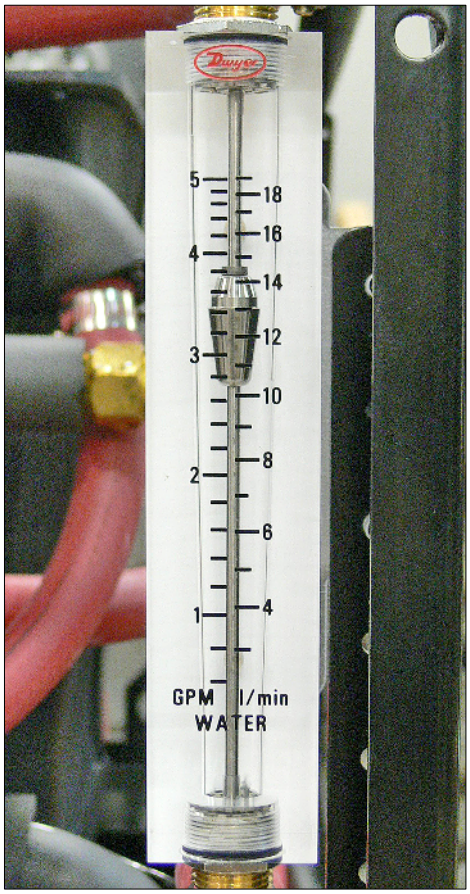

Figure 4-6 Option (A) Flow Meter

5.1 Water Storage Tank

5.1.1 Tank Inspection

Periodically inspect the tank to make sure that the water is clear and that there has been no accumulation of debris.

5.1.2 Frequency of Water Changes

The frequency of required water changes varies according to the condition of the water at your individual environment; however, Haskris recommends that the water in the tank be changed once or twice per year at a minimum.

5.1.3 Biological Growth

Haskris recommends using opaque hose, between the Haskris system and the equipment being cooled, to minimize light introduced into the system, thus minimizing biological growth.

If your system exhibits biological growth, we offer the following recommendations:

NOTE!

It is EXTREMELY important that you check with the manufacturer of the equipment being cooled to ensure that the use of any biologically inhibiting chemicals or additives is compatible with their equipment.

System Flushing

Flush the system by using one of the following 3 methods:

Method 1 - Original equipment manufacturer does NOT allow the use of chemicals in the system: Run a short hose directly from the supply to the return line in a closed loop in order to flush the Haskris system out.

Method 2 - Original equipment manufacturer allows the use of hydrogen peroxide: Add one (1) pint (0.5 liters) of 3% hydrogen peroxide per 15 gallons (57 liters) of water. Circulate the water for 20-30 minutes. Drain the system and refill with clean, potable (drinkable) distilled water.

Chemical Additives

Haskris recommends that additives are only used as a means of last resort. Various concentrations of a variety of chemicals can be used to minimize (or eliminate) biological growth on an ongoing basis.

For a list of approved additives together with instructions on how to use them, please consult the FAQ section on the Haskris website:

http://www.haskris.com/Documents/Haskris_WaterTreatment.pdf

Water Filtration

A 5-micron filter is very helpful in keeping the water recirculation system clean. Section 5.4 further describes this mechanism.

5.2 Air-Cooled Condenser

Haskris systems with air-cooled condensers draw a substantial amount of air across the condenser fins and coils. As dust and debris collect, heat transfer becomes less efficient, resulting in the loss of cooling capacity. To remove the accumulation of debris, vacuum the condenser fins thoroughly on a regular basis. A brush may be used to loosen compacted debris.

5.3 Pump Motor Lubrication

Turbine pump motors and newer Positive Displacement Pump (PDP) motors do not require lubrication. Some older motors used in conjunction with PDP models 10047, 10048 and 10049 require lubrication once per year. To lubricate, remove the plastic plug at the end of the motor and add 3-4 drops of SAE #10 motor oil. Check the motor nameplate if unsure.

5.4 Strainers and Filters

5.4.1 Nylon Suction Strainer

NOTE!

Cavitation due to improper strainer maintenance will damage the pump and is not covered under warranty.

Positive Displacement Pumps (PD pump models 102L060, 102L100, 104L215) and several T-Series Turbine Pumps use a Nylon Suction Strainer (Fig. 5-1). This strainer is located inside the water storage tank of your system and prevents debris from damaging the pump impeller.

Figure 5-1 Nylon Suction Strainer
Part Number 1040

Ordering Replacement Strainers

Replacement strainers may be purchased from Haskris. Order Haskris part number 1040 when ordering a single replacement strainer, or part number 9040 when ordering a 3-pack of strainers. Contact Haskris to confirm the strainer part number if you are unsure.

When to Clean the Strainer

After initial start-up, check the strainer on a monthly basis. The mesh should be clean. If the mesh feels slippery or “slimy”, this is an indication of biological growth. If water can not pass through the end of the strainer, the pump will cavitate and water flow will be diminished. **Cavitation due to improper strainer maintenance will damage the pump and is not covered under warranty.** Clean the strainer whenever there is a significant accumulation of debris or an indication of biological growth on the strainer.

To Replace or Clean the Strainer

To replace or clean the strainer, **place the unit power switch to the off position**, lift the strainer out of the reservoir, loosen the hose clamp, and remove the strainer from the hose. Remove debris from the mesh using a cleaning agent and water. A soft-bristled brush can be to used loosen the debris. Be careful not to tear the nylon mesh. If debris accumulates inside the strainer or if the strainer becomes damaged in some way, replace the strainer. Prime the pump per section 3.2 before reattaching the strainer to the hose in the reservoir. Tighten the hose clamp securely.

5.4.2 Supply Line Filter Option (L) (as applicable)

A supply-line filter (Fig. 5-2) is similar to a strainer, but it is located in the supply water line (either external or internal to the system frame.) This filter will help prevent debris from entering the system and can also provide significant protection against algae growth in the tank.

Figure 5-2
Supply Line
Filter

5.4.2 Supply Line Filters (cont.)

Replacing a Supply-Line Filter

Record the operating water pressure during start-up of your Haskris system, when the filter element is clean. The operating water pressure can be read by viewing the water pressure gauge (furnished). Replace the filter when the pressure increases 5-6 psi (0.3 - 0.4 bar) above the initial start-up pressure. Replace-ment filter elements may be ordered by contacting Haskris.

6.1 Standard Product Warranty

Limited Warranty: Haskris' warranty is limited to the following provisions and does not apply to claims where the product has been mishandled or used in a manner inconsistent with this instruction manual. Haskris makes no other warranty, express or implied, including all implied warranties of merchantability and fitness for a particular purpose.

Term & Conditions Provisions: Warranty extends for one (1) year from date of start-up or shipment (from Haskris), in no event longer than 18-months from the date of shipment. The warranty includes parts and on-site labor. Any warranty labor must be authorized by Haskris, in writing, prior to proceeding with the repairs.

Parts Provisions: Parts warranty does not include consumable items such as filtration elements. Replacement parts furnished during the system warranty are covered until the system warranty expires. Parts purchased after the system warranty expires will be covered for a period of 90-days. Defective parts must be returned, transportation prepaid, to Haskris Company. Normal outgoing surface transportation charges will be paid by Haskris.

Maintenance Action:	Performed By:	Date:

Sales - 001-847-956-6420 - sales@haskris.com

Service - 001-847-956-6420 - service@haskris.com

Technical Documents - www.haskris.com

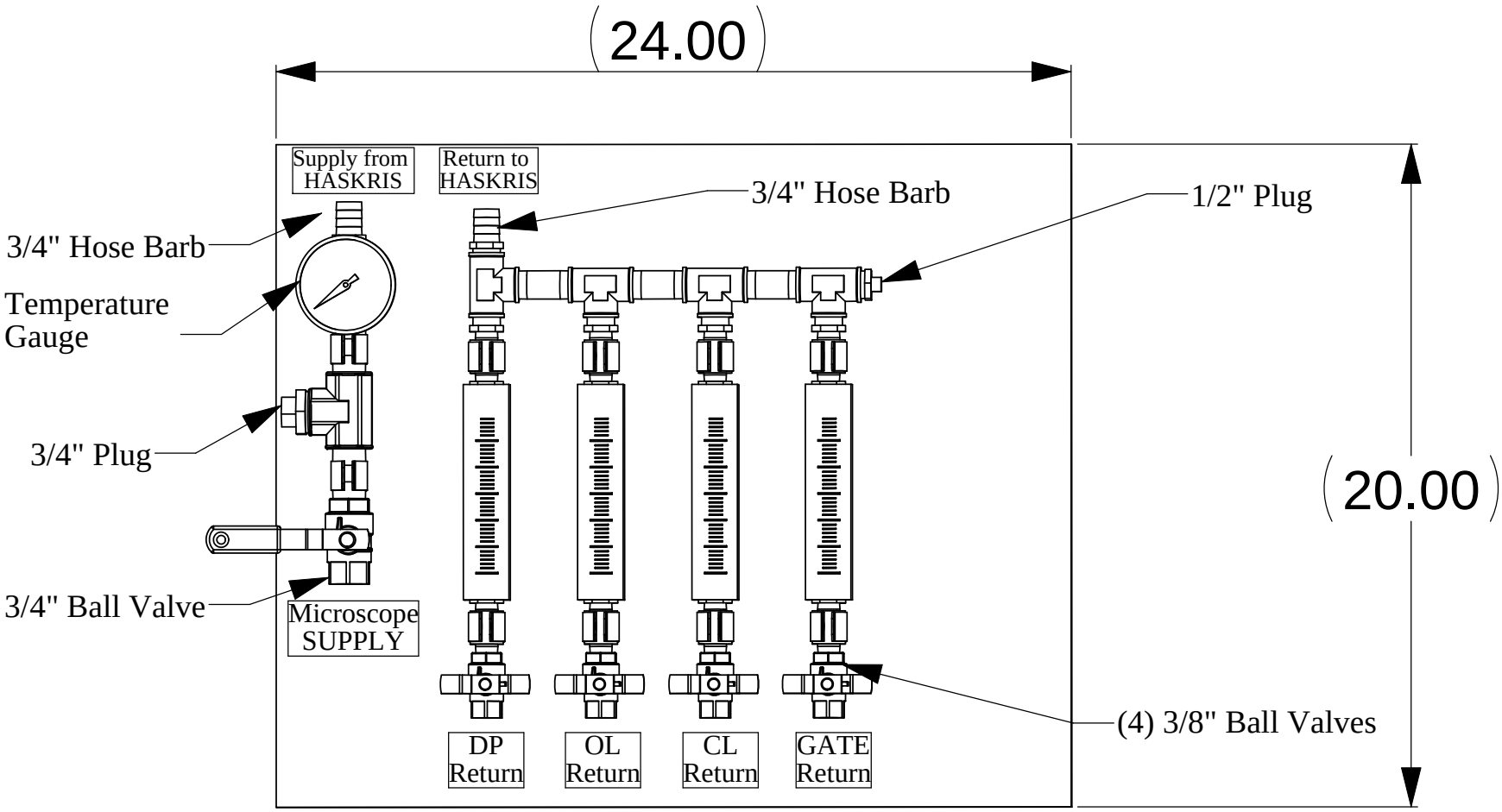

		UNLESS OTHERWISE SPECIFIED:		NAME	DATE
		DIMENSIONS ARE IN INCHES TOLERANCES: FRACTIONAL ±1/16 ANGULAR: MACH ± 1° BEND ±2° TWO PLACE DECIMAL ±.010 THREE PLACE DECIMAL ±.005	DRAWN		
			CHECKED		
			ENG APPR.		
			MFG APPR.		
		INTERPRET GEOMETRIC TOLERANCING PER:	Q.A.		
		MATERIAL	COMMENTS:		
NEXT ASSY	USED ON	FINISH			
APPLICATION		DO NOT SCALE DRAWING			

HASKRIS

TITLE:

SIZE	DWG. NO.	REV
A	K9-revA	
SCALE: 1:10	WEIGHT:	SHEET 1 OF 1

PROPRIETARY AND CONFIDENTIAL

THE INFORMATION CONTAINED IN THIS DRAWING IS THE SOLE PROPERTY OF <INSERT COMPANY NAME HERE>. ANY REPRODUCTION IN PART OR AS A WHOLE WITHOUT THE WRITTEN PERMISSION OF <INSERT COMPANY NAME HERE> IS PROHIBITED.

5 4 3 2 1

Model R175-CH(N2)(R4)S(K9) (208/230V-1Ø-60Hz)

FRONT VIEW

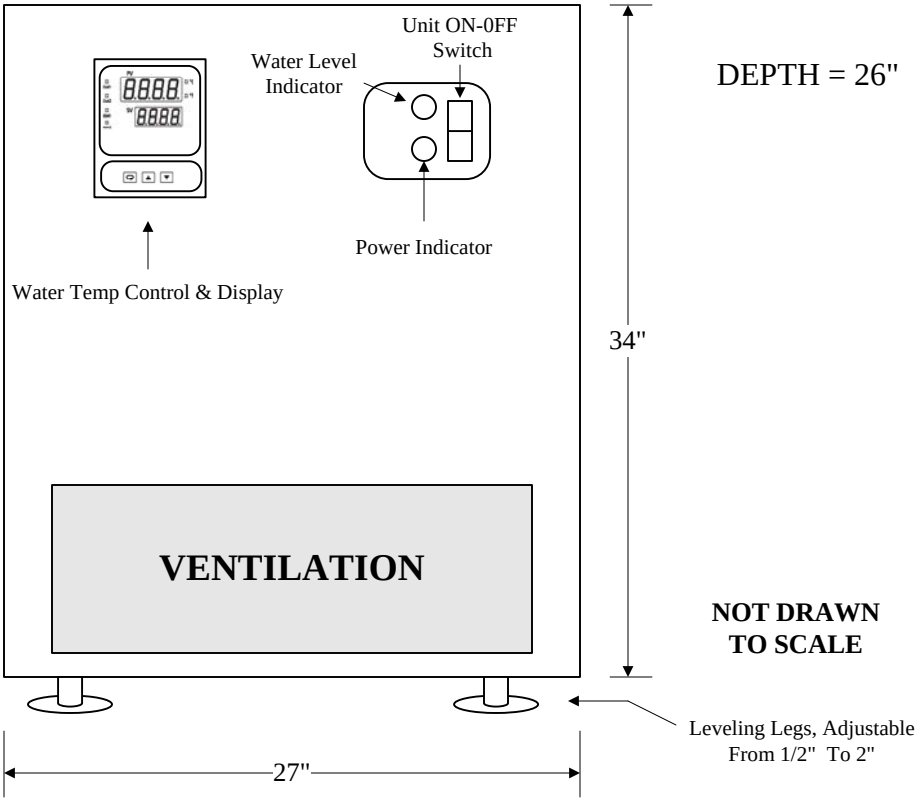

REAR VIEW

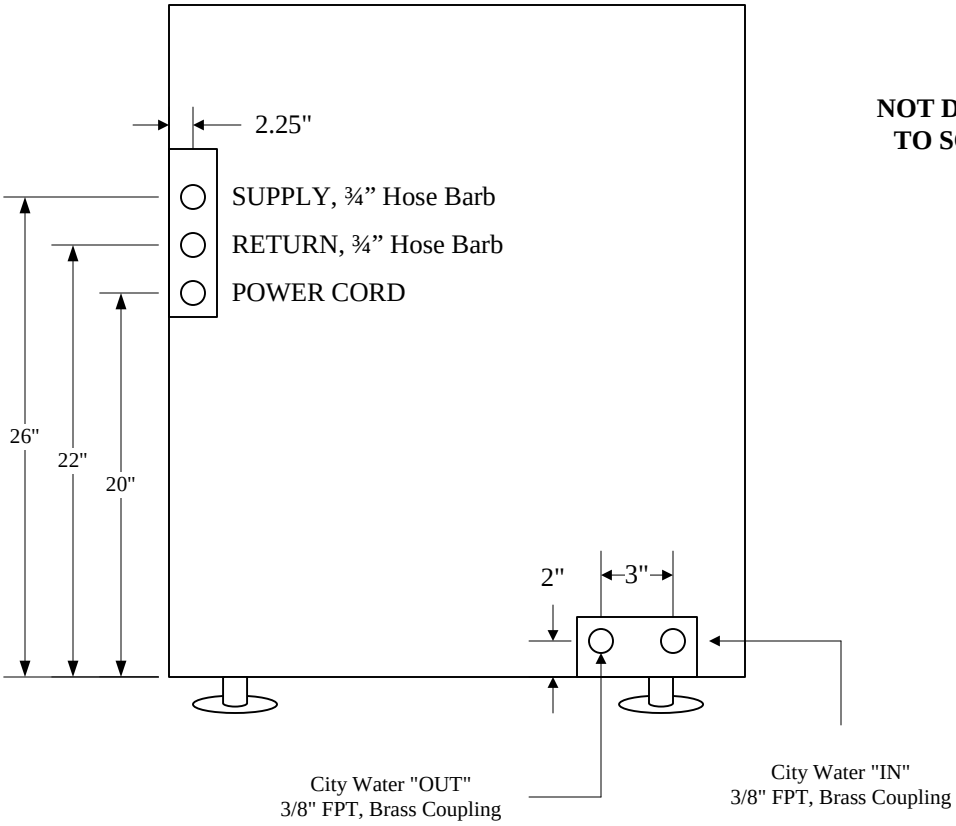

R175-CH(N2)(R4)S(K9).vsd

HASKRIS CO. MODEL R175-CH(N2)(R4)S(K9)

Installed Options

Option (C):	Water Cooled Condenser
Option (H):	Electronic Close Temperature Control
Option (N2):	High Temperature Alarm, Two Stage
Option (R4):	Reduced Pulsation Turbine Style Pump
Option (S):	Flow Switch
Option (K9):	Piping and Wiring modifications per JEOL, including remote manifold

Electrical Requirements

Power:	208/230V-1Ø-60Hz
MCA (Minimum Circuit Ampacity):	15.3 A
MOCP (Maximum Over-Current Protection):	25 A, time delay
Remote Interlock:	Furnished with 115V coil

Technical Features

Cooling Capacity (at 65F supply water temp):	22,165 Btu/hr 6,500 Watts 5,585 Kcal/hr
Water Pump Capacity:	4.0 GPM (15.1 LPM)
Water Reservoir Volume:	9.0 Gallons (34 Litres)
Temperature Stability:	Plus or minus 0.1 C
Refrigerant:	R22
Unit Weight:	400 lbs (181 Kgs)
Unit Dimensions :	27" W x 26" D x 34" H.
Coolant Required:	Clean, potable, distilled water

Condenser Water Requirements

When Water Source Is:	65F (18C)	Flow Rate Required Is:	1.8 GPM (6.8 LPM)
	75F (24C)		3.5 GPM (13.2 LPM)
	85F (29C)		5.3 GPM (20.0 LPM)

MINIMUM required pressure differential from condenser water inlet to outlet: 25 psi

MAXIMUM condenser water inlet pressure: 125 psi

* The heat load from the microscope is ultimately dissipated to the source of condenser water.

** The heat dissipated into the room is negligible.

Location

Must be installed in a clean, indoor environment.

We suggest access to the:
TOP for routine maintenance, such as changing water in the reservoir.
FRONT for visibility of controls and readouts.
ONE SIDE for convenient servicing should a spare part be required.

Security Plus
OnLine Uninterruptible Power Supply
User Instruction Manual

POWERVAR
Solutions for Power Quality®

DANGER

Danger- The danger symbol is a lightning bolt mark enclosed in a triangle which precedes the 3/16-inch high letters spelling the word “DANGER”. The danger symbol is used to indicate imminently hazardous situations, locations, and conditions which, if not avoided, WILL result in death, serious injury, and/or severe property damage.

CAUTION

Caution- The caution symbol is an exclamation mark enclosed in a triangle which precedes the 3/16-inch high letters spelling the word “CAUTION”. The caution symbol is used to indicate potentially hazardous situations and conditions which, if not avoided may result in injury. Equipment damage may also occur.

WARNING

Warning- The warning symbol is an exclamation mark in a triangle which precedes the 3/16-inch high letters spelling the word “WARNING”. The warning symbol is used to indicate potentially hazardous situations and conditions which, if not avoided COULD result in serious injury or death. Severe property damage COULD also occur.

ATTENTION

Attention warnings- The attention warning symbol is an exclamation mark enclosed in a triangle which precedes the 3/16-inch high letters spelling the word “ATTENTION”. The Attention warning symbol is used to indicate situations and conditions that can cause operator injury and/or equipment damage.

Other warning symbols may appear along with the *Danger* and *Caution* symbol and are used to specify special hazards. These warnings describe particular areas where special care and/or procedures are required in order to prevent serious injury and possible death:

Electrical warnings- The electrical warning symbol is a lightning bolt mark enclosed in a triangle. The Electrical warning symbol is used to indicate high voltage locations and conditions may cause serious injury or death if the proper p

Explosion warnings- The explosion warning symbol is an explosion mark enclosed in a triangle. The Explosion warning symbol is used to indicate locations and conditions where molten, exploding parts may cause serious injury or death if the proper precautions are not observed

Protective earth (Ground)

N

Connection point for the neutral conductor on PERMANENTLY INSTALLED EQUIPMENT

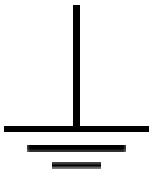

Earth Ground

NOTE TO USERS

To ensure correct operation of the UPS, please read this instruction manual carefully. Please keep this manual handy for future reference.

This UPS has dangerously high voltages on both its Input and output connections. Contact with these voltages may be life threatening. Please follow the operating instructions carefully. Please give close attention to the warnings in this manual and those posted on the UPS. There are no user serviceable parts inside the UPS. Disassembly and/or maintenance should only be done by an authorized professional service technician.

IMPORTANT INFORMATION FOR USERS OF THIS UNINTERRUPTIBLE POWER SUPPLY

1. Before operating the UPS or connecting any load equipment, please ensure the UPS is connected to a properly grounded electrical supply.
2. This UPS has dangerously high voltages on both its input and output connections. Contact with these voltages may be life threatening.
3. Please do not disassemble the covers. There is a risk of electric shock.
4. In an emergency, immediately turn off the circuit breaker for the circuit supplying power to the UPS. Also immediately turn off the battery circuit breaker.
5. This UPS has two power sources. One is the circuit supplying the UPS with input power. The other is the UPS battery. Prior to any maintenance, both of these power sources must be disconnected to ensure that the UPS is de-energized. If only the input power is disconnected, the UPS can still operate from the battery, and hazardous voltages may still exist.
6. To prevent damage or a safety hazard, keep the UPS away from open flame and any other devices that may cause sparks.
7. Do not open or damage individual battery cases as spillage of caustic electrolyte may occur resulting in danger to life, safety, and the environment.
8. The charging characteristics of UPS batteries vary by both brand and type. For this reason, replacement batteries should be of the same brand and type as those specified by the manufacturer. Using batteries other than the brand and type specified by the manufacturer may affect the performance of the UPS. Before installing batteries of different brand or type, please consult with the manufacturer.
9. The UPS has an internal EMI filter for purposes of enhancing electromagnetic compatibility with the input mains supply. This filter produces leakage current to earth on the input mains. When selecting a circuit breaker for the branch circuit supplying power to the UPS, ensure that the breaker selected is not an ELCB type circuit breaker that detects earth leakage current.
10. Please contact the manufacturer or an authorized distributor for any assistance with troubleshooting.

11. The UPS should only be serviced or maintained by a factory authorized service technician.
12. This UPS meets FCC Class A electromagnetic compatibility requirements.
13. Depleted batteries must be disposed of in a proper manner. Contact your local recycling or hazardous waste center or the UPS manufacturer for instructions concerning proper disposal.

INSTRUCTIONS IMPORTANTES CONCERNANT LA SÉCURITÉ

CONSERVER CES INSTRUCTIONS Cette notice contient des instructions importantes concernant la sécurté

ATTENTION Un battery puet présenter un risque de choc électrique, de brûlure par transfert d' énergie.

ATTENTION L'élimination des batteries est règlementèe. Consultar les codes locaux à cet effet

CONTENTS

1.0 Overview
1.1 Primary Functions and Operating Characteristics 7
1.2 Precautions 7
1.3 Performance Specifications 8

2.0 Structure and Basic Principles
2.1 General Structure 23
2.1.1 Security Plus Front Panel and Rear Panel Structure 23
2.1.2 Security Plus Display/Controls Operation 24
2.1.3 Security Plus Terminal Connection Block Illustration (2-6kVA) 28
2.1.4 Security Plus Terminal Connection Block Illustration (8-15kVA) ... 31
2.1.5 RS232 Communications 34
2.1.6 Communication Port Maintenance.. ..... .34
2.2 Basic Principles 34

3.0 Equipment Installation
3.1 Site and Environment Requirements 36
3.1.1 Site Requirements 36
3.1.2 Environment Requirements 36
3.2 Procedures of Dismantling Containers 36
3.3 Installation of UPS 39

4.0 Equipment Use and Maintenance
4.1 Preparations for Start-up 40
4.2 Routine UPS Start-up Sequence 40
4.3 Routine UPS Shutdown 40
4.4 Important Battery Issues 40
4.5 Frequent Trouble Causes 41
4.6 Troubleshooting 43
4.6.1 Overview 43
4.6.2 Troubleshooting Steps 43

5.0 Battery Tray Replacement
5.1 Precautions 45
5.1.1 Battery Tray Replacement (2-6kVA) 46
5.1.2 Battery Tray Replacement (8-10kVA) 47

6.0 Packing, Transportation and Storage
6.1 Packing 49
6.2 Transportation 49
6.3 Storage 49
6.4 Fuse Replacements 49

7.0 Mechanical Characteristics
7.1 Unit Dimensions/Weights 50
7.2 Shipping Dimensions/Weights 50

8.0 Warranty
8.1 Basic Warranty 51
8.2 Limitations 51

1.0 Overview

The Security Plus UPS is a high frequency, double conversion (true online) intelligent UPS for use with file servers, enterprise servers, microcomputers, telecommunication systems, data centers, laboratory instrumentation, and other microprocessor-based equipment that requires high quality, conditioned uninterruptible power. It is designed for use in telecom, IT, LAN, banking and financial, or almost any application where the performance of computer systems is mission critical. The Security Plus UPS is designed for connection to a single-phase alternating current input and provides power output loads requiring single-phase alternating current power.

1.1 Primary Functions and Operating Characteristics

1. Intelligent RS232 communication - Using the available RS232 standard data interface or USB port and UPS power management software, you take advantage of three communications functions: (1) The connected host computer can supervise UPS operation and control electric parameters, (2) Remote control of power ON and OFF functions can be accomplished, (3) with an available internal SNMP network adapter inserted in the internal card SNMP option card slot, the UPS is discoverable by a network.
2. High input power factor and low input THDI – This UPS uses an advanced active power factor correction (PFC) technology, which improves the input power factor and makes the UPS friendlier to the input mains supply.
3. High performance to price ratio – This UPS uses high frequency pulse width modulation (PWM) technology to ensure high efficiency, reduced size and weight, and improved operational reliability.
4. Dependable self-protection functions – This UPS provides dependable self-protection functions such as output over-voltage protection, battery low voltage protection, and input over-voltage protection. These self-protection features improve reliability and adaptability to a variety of electronic applications and installation environments.
5. Wide input voltage window – This UPS has a wide input voltage operating window, which ensures that even in the presence of unusually low or high input voltage, the UPS will continue to supply high quality dependable power to the connected load without discharging its battery. This reduces battery discharge cycles and results in increased battery life.

1.2 Precautions

Please be careful to observe the following general safety precautions during operation or maintenance

1. There are no user serviceable parts inside this UPS. Please don't remove the covers. This system can only be maintained or repaired by trained authorized service technicians.

2. To improve electromagnetic compatibility (EMC), this UPS has an input EMI filter, which produces potentially dangerous leakage current to ground. Ensure the UPS is connected to a properly grounded input electrical source.

3. Install this UPS indoors in an environment that is temperature and humidity controlled.
4. Install this UPS in a dust-free environment.
5. This UPS has two sources of power. Before maintenance is performed, turn off the branch circuit breaker powering the UPS and turn off all battery switches.
6. Even with the AC input power supply turned off, the UPS's internal battery still represents a potentially dangerous source of high voltage electrical power.
7. If the battery circuit has not been disconnected from the AC input, dangerous voltage potential still exists between the battery terminal and the ground terminal.
8. UPS batteries represent a high voltage source and a potential hazard to personal safety. Please pay attention to proper safety precautions and use insulated tools during installation.
9. UPS batteries contain corrosive and caustic chemicals. Improper handling of batteries may lead to the unintended release or leakage of these substances. Please handle batteries carefully.
10. Condensation may occur when the UPS is moved from a low temperature, low humidity environment to a warm humid environment. Condensation may cause UPS damage or hazardous electrical shock. To ensure the safety of both the UPS and the personnel around it, make sure that the UPS is installed only after it has fully acclimated to its installation environment. This UPS is not intended to be operated in an environment of either low temperature or high humidity.
11. DC voltage is still present on the battery fuses even with the UPS turned off. The battery trays must be removed before servicing UPS.

1.3 Performance Specifications

The major specifications of the Security Plus UPS are shown in the individual specification sheets on the following pages.

Note: Specifications are subject to change without notice.

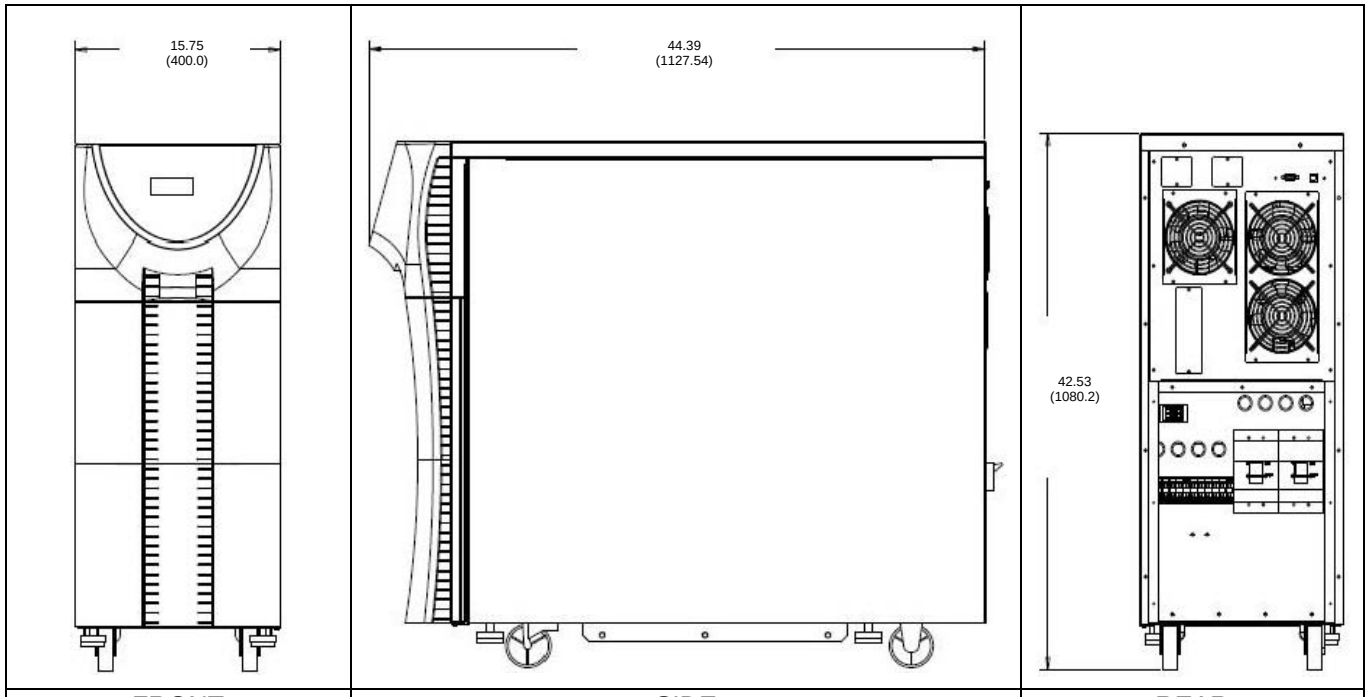

FRONT	SIDE	REAR

	Model	ABCDEF12.0-22				ABCDEF15.0-22
	Topology	True On line, Double-Conversion, IGBT Design, Internal Isolation Transformer				
INPUT	Voltage (VAC)	200	208	220	230	240
	Voltage Range (VAC)	140-230	146-239	154-253	161-264	168-276
	Voltage Tolerance	+ 15% ~ -30% before switching to batteries				
	Frequency (Hz)	50/60				
	Frequency Tolerance	42 Hz to 69 Hz before switching to batteries				
	Input PF	> 0.95				
	Input Current THD	< 5.0%				
	Input Connection	Hardwired Standard; Line Cord Optional (Consult factory)				
	Input Capacity	13793W				17241W
OUTPUT	Capacity	12000 VA / 10800W				15000 VA / 13500W
	Voltage (VAC)	200	120 208 240	220	230	120 208 240
	Voltage Regulation	± 3.0% Max, ± 1.0% Normal				
	Output Voltage THD	< 3.0%				
	Power Factor	0.9				
	Step Load Response	± 4.0% for 50% step load change ± 6.0% for 100% step load change Return to ± 3.0% of nominal within 3 cycles				
	Crest Factor	3:1				
	Frequency (Hz)	50 or 60				
	Frequency Regulation	± 0.1Hz				
	Overload	125% for 2 minutes 150% for 30 seconds 300% for 500ms				
	Efficiency	AC-AC >87.0% DC-AC >85.0%				
	Common Mode Noise	< 0.5 VRMS				
	Output Connection	Hardwired Standard; Output Receptacles Optional (Consult factory)				

BYPASS	Input Voltage (VAC)	200	208	220	230	240
	Output Voltage (VAC)	200	120 208 240	220	230	120 208 240
	Transformer Voltage Regulation	± 3.0%				
	Overload	125% for 10 minutes 150% for 500ms 1000% for 1 cycle				
	Efficiency	> 95.0%				
BATTERY	Voltage (VDC)	288.0, nominal 327.6, float				
	Battery	12V, 34W flame retardant High Rate, Sealed Lead-Acid				
	Quantity	24				
	Charge Current (ADC)	2.5				
	Backup Time (min)	> 5.0				
	Recharge Time	8 hours to 90%				
ENVIRONMENT	Temperature (°C)	0 to 40, operating -20 to 60, transit				
	Altitude (m)	2,000, operating 12,000, transit				
	Humidity	5.0% to 90.0%, non condensing				
	Audible (dBA)	55-60 @ 1m from front of unit				
	Heat Dissipation (BTU/hr)	4239				
AGENCIES	EMC	FCC Part 15J Class A EN 55022 Class A/ CISPR 22 EN 50091-2 IEC 61000-3-2				
	Safety Agencies	UL1778 4th Ed. cUL to CSA22.2 No.107.1 IEC62040, w/CB report and certificate IEC61000-4-2, Electrostatic Discharge IEC61000-4-3, Radiated Electromagnetic Field Immunity IEC61000-4-4, Electrical Fast Transient/ Burst Immunity IEC61000-4-5, Surge Immunity IEC61000-4-6, Immunity to Conducted Radio Frequency Disturbances IEC61000-4-8, Power Frequency Magnetic Field Immunity IEC61000-4-11, Voltage Dips, Short Interruptions, and Voltage Variations				
	RoHS	All units are RoHS compliant				
OTHER	Communication	RS-232 USB DB-9 Dry Contacts Internal SNMP Adapter (optional)				
	Unit Weight	719.0lbs/ 326.1kg (12kVA) 739.0lbs/335.2kg (15kVA)				
	Shipping Weight	807.0lbs. / 366.0 kg (12kVA) 827.0lbs/ 375.1kg (15kVA)				
	Plug & Receptacle*	*Hardwire unit is standard. Plug & receptacle is optional. Contact factory for part numbers.				

Warranty/Support: POWERVAR warrants the electronics and transformers used in its uninterruptible power managers to be free from defects in materials and workmanship for a period of three years from the date of shipment. Batteries are warranted for a period of two years from the date of shipment for standby use; 90 days for cyclic use. For North American service or support on any POWERVAR product, please contact POWERVAR Technical Support at (800) 369-7179 (in Illinois call (847-596-7000). For service and support in EMEA, contact POWERVAR, Ltd. in the United Kingdom at +44 (0) 1793 553980. Or visit the POWERVAR website at **www.powervar.com**.

Battery Life Disclaimer: Powervar's standard battery warranty applies only to UPS and UPM products which are continuously connected to AC mains power, except during utility power outages. Products which are regularly and intentionally disconnected from AC mains power will experience battery discharge/charge cycles potentially far more numerous than those for which the battery was designed. As a result, products used in such applications will experience substantially reduced battery life. For that reason, Powervar's standard battery warranty does not apply for applications in which the UPS or UPM product is regularly and intentionally disconnected from AC mains power. Powervar UPS and UPM products used in such applications shall receive a 90 day warranty on batteries.

POWERVAR, Inc. - 1450 Lakeside Drive, Waukegan, IL 60085

POWERVAR, Ltd. - Unit 5 Birch, Kembrey Park, Swindon, Wiltshire, UK SN2 8UU

Both the input and output connections of this UPS exhibit dangerous high voltage, which represents a hazard to personal life or safety. Please read this manual carefully prior to installation, operation, and use. Please pay close attention to any caution labels and statements. Only trained, authorized service personnel should be allowed to remove UPS covers or perform maintenance tasks.

2.0 Structure and Basic Principles

2.1 General Structure

2.1.1 Security Plus Front Panel and Rear Panel Structure

The operator panel layout of the Security Plus UPS is illustrated in Fig. 2-1 and Table 2-1.

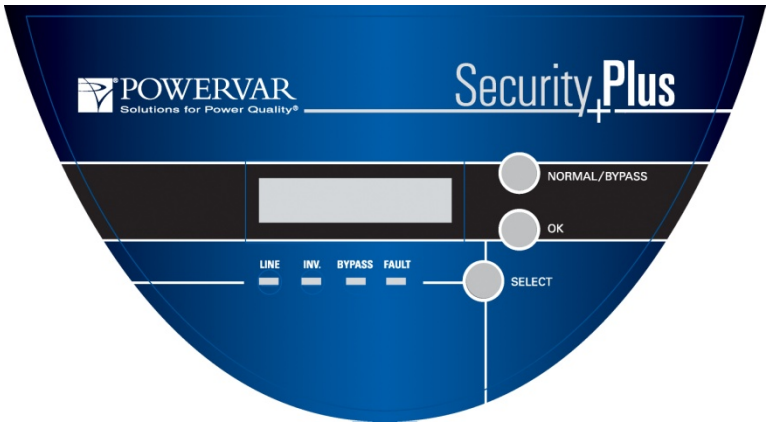

Figure 2-1

Item	Function
LCD Display Window	Displays status/programming information about UPS
Normal/Bypass Button	Turns UPS inverter on and off (when off UPS is in bypass)
OK Button	Press to confirm selection of a function
Select Button	Used to select or navigate through the UPS menu
Line LED Indicator	**ON** - main supply normal; **OFF**—no main supply;
Inverter LED Indicator	**ON** - Inverter On; **OFF**—Inverter Off
Bypass LED Indicator	**ON** - Indicates UPS is in bypass mode **BLINKING** - Bypass voltage is out of range. Bypass transfer is prohibited.
Fault LED Indicator	**ON** - UPS is in fault mode; **OFF**- UPS normal or turned off

Table 2-1

2.1.2 Security Plus Display/Controls Operation

The menu visible in the LCD display of the Security Plus UPS is illustrated in Fig. 2-2 and 2-3. The various LCD displays are accessed using the front panel controls of the UPS as follows:

Function Button Explanation

The **NORMAL/BYPASS** button is used to start and stop the inverter. When the inverter is stopped, the UPS will be in bypass.

The **SELECT** button is used to scroll through various display screens and must be pressed for 3 seconds to change UPS programming modes.

The **OK** button is only functional when in the programming mode (Settings Menu)

Display Content and Corresponding Operation

Default Mode

After startup, the LCD displays a message showing the UPS name and model number.

This message will display for 8 seconds unless the **SELECT** button is pushed. After either 8 seconds or if the **SELECT** button is pushed, the UPS display changes to either the "OPERATION MODE" display (i.e. NORM, BYP, BATT) or the "FAULT" display (if the UPS has detected a fault condition). In the absence of a UPS fault condition, the "OPERATION MODE" display is the default display.

UPS Parameters Mode

When the UPS is operating normally, pressing the "SELECT" button will allow switching to the UPS parameter displays.

When in the UPS Parameters mode, if no operation is performed for 30 seconds, the Parameters mode will be cancelled and the UPS display will return to the default "OPERATION MODE" display.

The parameter displays are as follows:

1. Operation Mode
2. Output voltage display
3. Input voltage display
4. Input frequency display
5. Output frequency display
6. Output load percentage display
7. Battery voltage display
8. Battery percentage charge display
9. UPS state one display
10. UPS state two display

While in the Parameters mode, pressing the "SELECT" button for 3 seconds will cause the UPS to enter the UPS Settings Mode. Refer to Figure 2.3 for the Parameter Setting Menu in the UPS Settings Mode.

Figure 2.2 – Display Verbiage

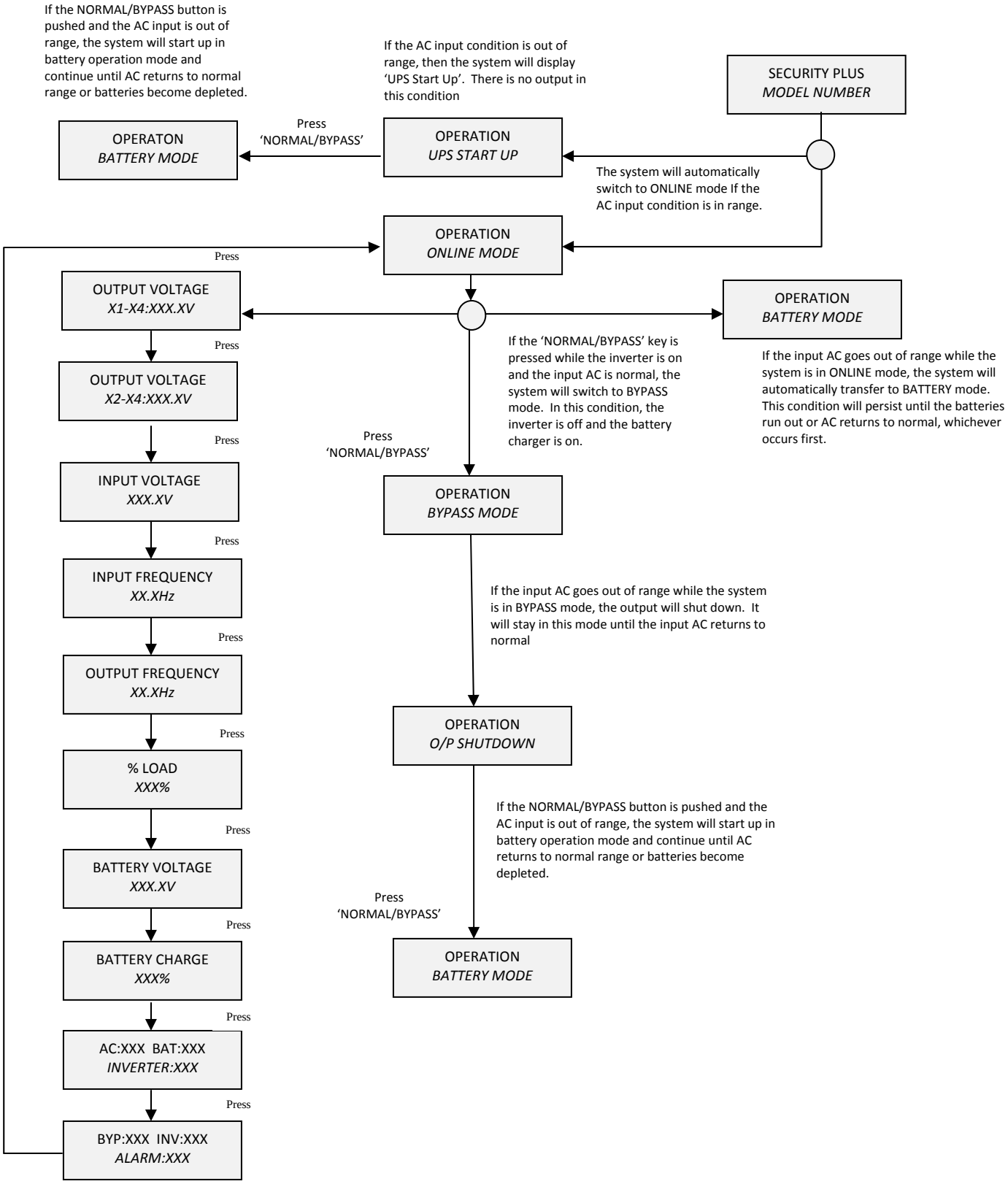

Figure 2.3 – Parameters Setting Menu

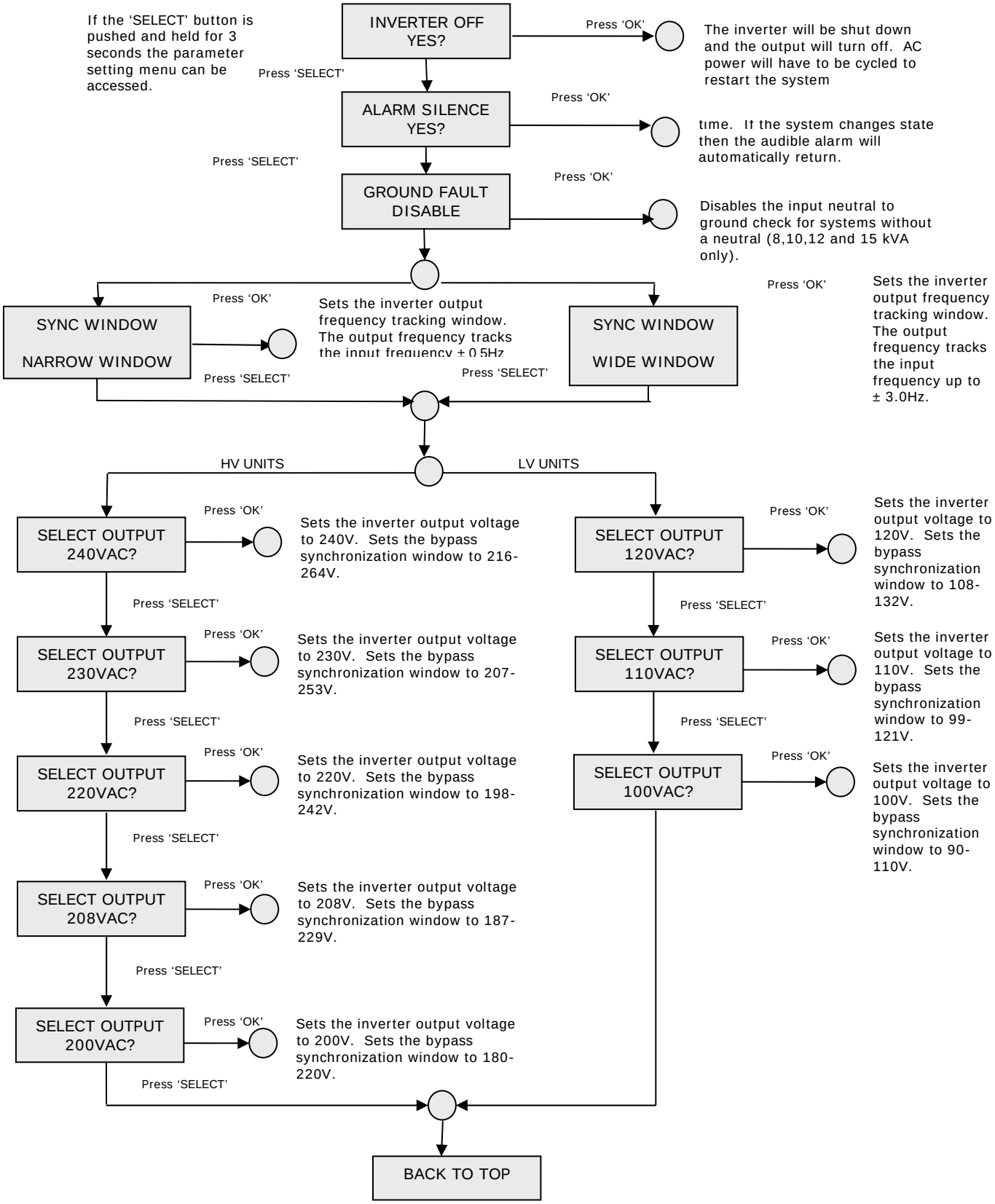

Settings Pages

HIGH VOLTAGE

1) Inverter Off Setting
2) Audible Alarm Enable/Disable
3) Frequency Window
4) 240V Output Setting
5) 230V Output Setting
6) 220V Output Setting
7) 208V Output Setting
8) 200V Output Setting

LOW VOLTAGE

1) Inverter Off Setting
2) Audible Alarm Enable/Disable
3) Frequency Window
4) 120V Output Setting
5) 110V Output Setting
6) 100V Output Setting

If the UPS enters a FAULT condition, it will switch to the fault display. All the fault condition displays are shown below:

1) Inverter fault
2) DC bus protection fault
3) Output short circuit fault
4) Overload protection fault (appears when UPS times out on overload and transfers to bypass)
5) Low battery voltage protection fault
6) Overload fault (appears when system is in inverter mode and detects an overload)
7) Over temperature protection fault
8) Fan fault

Item	Description	Item	Description
1	Operator Panel	6	Connection terminal block (not visible on units equipped with receptacle panel)
2	Air inlet panels	7	RS232 Interface
3	Dial panel	8	USB Interface
4	Optional SNMP Interface	9	Hot swappable cooling fans
5	Connection point for rear receptacle panel	10	Main supply and battery switches (circuit breakers)

Table 2-2

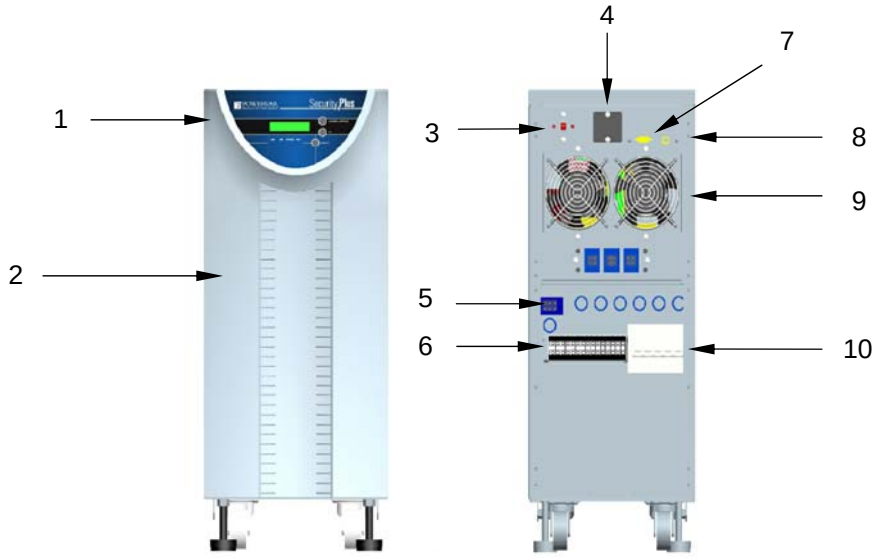

Figure 2-4

The front and rear panel layout of the Security Plus UPS is illustrated in Fig. 2-4 and Table 2-2.

2.1.4 Security Plus Terminal Connection Block Illustration (8-15kVA)

All models are factory configured for 50 or 60Hz operation. For the 8-15kVA, the input wires are directly connected to the AC input circuit breaker.

The wire connection (from left to right) of the terminal connection block on the rear is shown below:

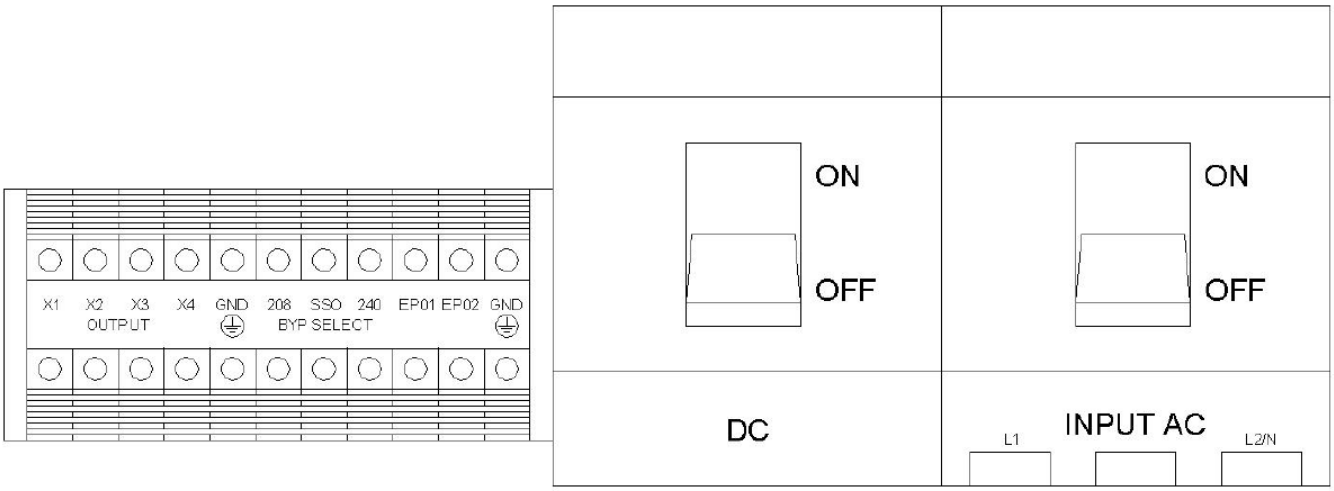

Figure 2-5D

For North American applications, UPS models may be configured for an input voltage of 208 or 240 volts at 60 Hz. Output voltages for these models are available at 120, 208 and 240 volts at 60 Hz. See the table below to connect to the terminal block in Figure 2-5D to achieve the desired input and output voltage configurations.

NORTH AMERICAN CONNECTIONS									
VOLTAGE RATING	INPUT		OUTPUT						BYPASS JUMPER
	VOLTAGE	FREQ	VOLTAGE				NEUTRAL	FREQ	
	L1 – L2/N		X1-X4	X1-X3	X3-X4	X2-X4			
208	208	60	240	120	120	208	X3	60	208-SSO
240	240	60	240	120	120	208	X3	60	240-SSO

NOTE: The neutral to ground connection must be properly connected for a 50 or 60 Hz configuration.

For international applications, UPS models may be configured for an input voltage of 200, 220, 230 or 240 volts at 50 Hz. Output voltage for these models matches the input voltage at 50 Hz. See the table below to connect to the terminal block in Figure 2-5B to achieve the desired input and output voltage configurations.

INTERNATIONAL CONNECTIONS									
VOLTAGE RATING	INPUT		OUTPUT						BYPASS JUMPER
	VOLTAGE	FREQ	VOLTAGE				NEUTRAL	FREQ	
	L1 – L2/N		X1-X4	X1-X3	X3-X4	X2-X4			
200	200	50Hz	--	--	--	200	X4	50Hz	208-SSO
220	220	50Hz	220	--	--	--	X4	50Hz	240-SSO
230	230	50Hz	230	--	--	--	X4	50Hz	240-SSO
240	240	50Hz	240	--	--	--	X4	50Hz	240-SSO

For field wired units, refer to table 2-4C for the proper conductor size and torque requirements. Only copper conductors are to be used for field wiring connections. The conductors should be rated at least 75ºC or greater. The conductor recommendations listed in the chart below are intended for installations in North America. For international installations, please refer to the local and national electrical codes and standards.

RATING	INPUT CONDUCTOR (AWG)		TORQUE (in-lbs)	OUTPUT CONDUCTOR (AWG)		TORQUE (in-lbs)	GROUND (AWG)		TORQUE (in-lbs)
	MIN	MAX		MIN	MAX		MIN	MAX	
8.0kVA	4.0	1.0	62	6.0	4.0	25	6.0	4.0	25
10.0kVA	3.0	1.0	62	6.0	4.0	25	6.0	4.0	25
12.0kVA	2.0	1.0	62	4.0	4.0	25	2.0	2.0	50
15.0kVA	1.0	1.0	62	4.0	4.0	25	2.0	2.0	50

TABLE 2-4C – 8-15kVA CONDUCTOR SIZE AND TORQUE SPECIFICATIONS

Figure 2-7 represents the wiring connections of the 8-10kVA units

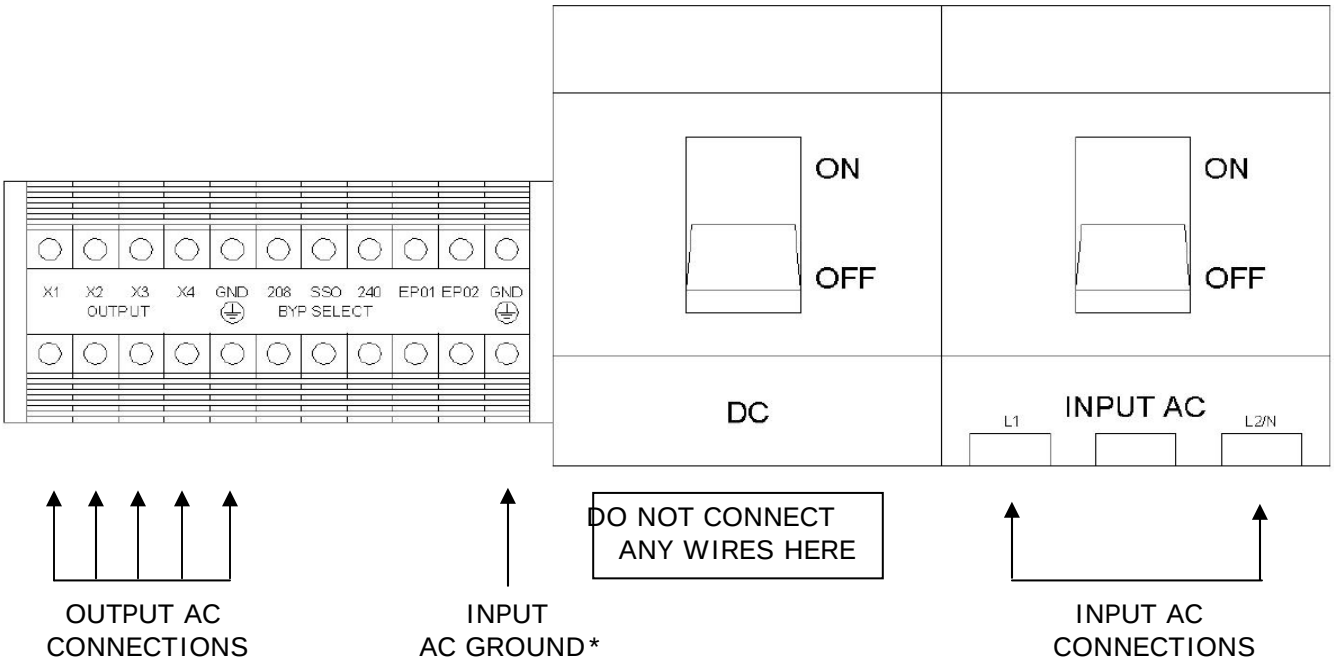

Figure 2-7

- For 12.0 and 15.0kVA all GROUND connections are made directly on the supplied GND terminal attached to the chassis.

All POWERVAR Hardwired Security Plus UPS system's mains INPUT must be protected by proper sized branch circuit breakers in the building installation. The recommended branch circuit ratings at full rated load are listed below:

ABCDEF2000-11	35 AMP
ABCDEF3000-11	45 AMP

	200-208V	220-240V
ABCDEF2000-22	20 AMP	15 AMP
ABCDEF3000-22	25 AMP	20 AMP
ABCDEF4000-22	35 AMP	25 AMP
ABCDEF5200-22	40 AMP	30 AMP
ABCDEF6000-22	45 AMP	35 AMP
ABCDEF8000-22	60 AMP	45 AMP
ABCDEF10.0-22	80 AMP	60 AMP
ABCDEF12.0-22	90 AMP	70 AMP
ABCDEF15.0-22	110 AMP	80 AMP

Refer to local and national electric codes for proper installation guidelines. The breaker recommendations listed in the chart above are intended for installations in North America. For international installations, please refer to the local and national electrical codes and standards.

All Powervar Hardwired Security Plus UPS system's OUTPUT must be protected by proper sized AC disconnect device. The recommended disconnect device ratings at full rated load are listed below:

ABCDEF2000-11	20 AMP
ABCDEF2000-22	10 AMP
ABCDEF3000-11	30 AMP
ABCDEF3000-22	15 AMP
ABCDEF4000-22	20 AMP
ABCDEF5200-22	25 AMP
ABCDEF6000-22	30 AMP
ABCDEF8000-22	50 AMP
ABCDEF10.0-22	65 AMP
ABCDEF12.0-22	80 AMP
ABCDEF15.0-22	100 AMP

2.1.5 RS232 Communications

The pin-out and signals configuration of the RS232 interface is illustrated in Table 2-5

Maximum current carrying capacity of the switch contacts is 3A / 30VDC.

RS232 Pin #	Signal Description
1	Not used
2	Transmit data (TXD)
3	Receive date (RXD)
4	AC fail (normally open)
5	Common
6	Battery low (normally open)
7	AC fail (normally closed)
8	Output, AC fail signal (high to low signal)

Table 2-5

2.1.6 Communication Ports Maintenance

The USB communication port on the back panel of the UPS system is designed to communicate with a computer or server. Only connect to this USB port if you intend to use POWERVAR's monitoring software from a computer or server near the UPS system. The RS232 port is designed to communicate with a computer or server for the same monitoring capabilities. You should only connect to the RS232 port of a computer or server. The remote contact interface port is provided as a set of solid state relay switch contacts. The switches are available through a DB9 male connector on the rear of the UPS. The chart above shows the pin assignment for each signal. The EPO (emergency power off) contact is a normally closed 125 VAC circuit. When wiring to the EPO a properly sized switch must be used. Contact POWERVAR with any questions

2.2 Basic Principles

When commercial power is normal, UPS input power is routed via the power factor corrected AC to DC chopper circuit. The chopper circuit increases the voltage to ±380V stabilized DC voltage, which supplies DC/AC inverter. The inverter changes the DC power back into regulated, conditioned, sinewave AC power, which is connected to the load equipment via a low impedance isolation transformer. At the same time, the battery is kept charged by a battery charger. When commercial power is lost the battery supplies power to the DC buss for use by the inverter. This assures continuous "no break" power for the connected load. In the event of an inverter overload or inverter fault, a solid state static bypass switch automatically connects input power directly to the primary of the output isolation transformer.

UPS operational modes are illustrated in Figures 2-8, 2-9, and 2-10.

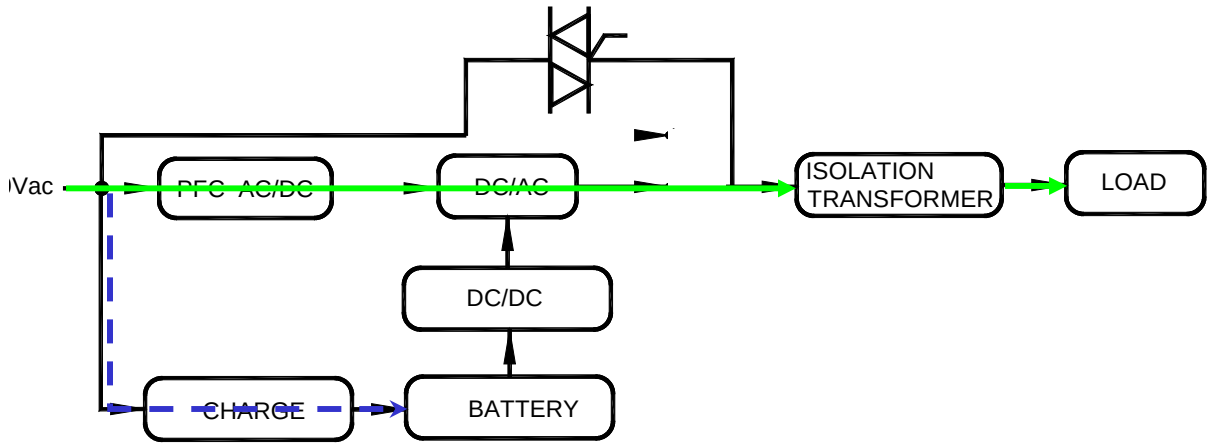

Figure 2-8—Normal Operation Mode

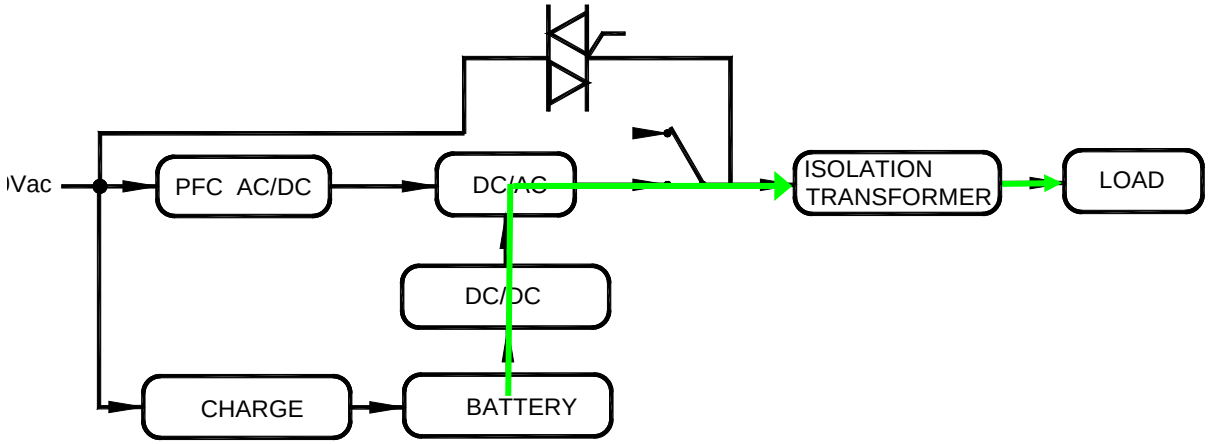

Figure 2-9—Battery Operation Mode

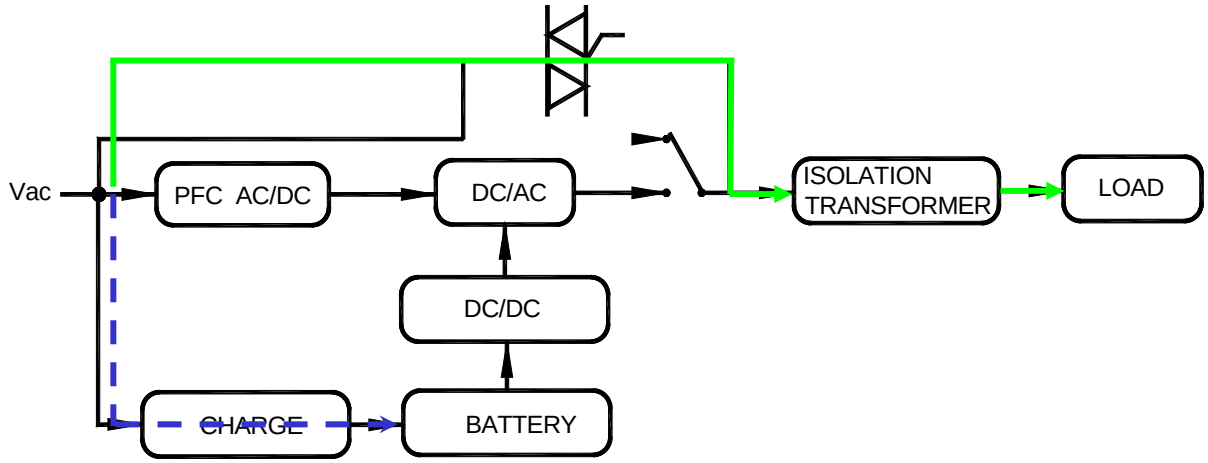

Figure 2-10—Bypass Operation Mode

3.0 Equipment Installation

3.1 Site and Environment Requirements

Before beginning installation of the UPS, the environment where the UPS is to be installed must meet reasonable standards for safe and normal operation as defined in this section. If the installation site conditions do not meet the minimum requirements of safe equipment operation, corresponding changes to the site conditions should be made. Install the equipment only after meeting the conditions of safe and normal equipment operation.

3.1.1 Site Requirements

1. The conditions at the installation site should agree with these guidelines to ensure safe and normal equipment operation.
2. The equipment room must be equipped with appropriate fire prevention and detection devices.
3. The branch electrical circuit supplying power to the UPS should be a dedicated circuit with no other loads connected to it. The circuit should have its own dedicated circuit breaker and (if plug connected) its own dedicated input power receptacle.
4. Do not store flammable or explosive materials in the same room with the UPS.
5. The UPS must be properly grounded to its power supply. The voltage between neutral wire and safety ground on the commercial power input cannot exceed 5V.
6. Ensure that all construction in the installation area is completed prior to installing the UPS. Ensure that the UPS is installed on a hard surfaced floor and the installation site is tidy, dry, and dust-free.
7. The UPS is not supplied with input over-current protection. Reference local and national electric codes for proper input circuit breaker sizing.

3.1.2 Environmental Requirements

Ambient temperature: 0^0 C to $+40^0$ C

Relative humidity: 0% RH to 95% RH, non-condensing

Cooling mode: Forced air cooling

Orientation: Install upright with no more than 5º departure from the vertical plane.

3.2 Procedures for Dismantling Containers

After the equipment is delivered to the installation site, the UPS should be carefully unpacked from the shipping container. Use Figure 3-2 on the next page along with the accompanying un-packaging instructions to remove the UPS from the shipping container. Check the items you have received against the shipping list to ensure you have received all necessary items. Carefully inspect the shipment for any hidden damage. If damage is noted, please contact the freight carrier and request an inspection of the shipping container.

If items are missing from your shipment or if the shipment is not in agreement with your order, contact your distributor or the manufacturer as appropriate.

Note: Do not dispose of any packing materials until the UPS has been inspected, installed, and verified for proper operation.

Security Plus Unpacking Instructions
For 8-15kVA Models

The UPS is packed in a heavy duty cardboard carton. The carton is securely attached to a heavy duty shipping pallet. The packing materials may be retained for use in shipping the UPS to another location. Should you find it necessary to do so, please observe the correct orientation of the UPS when packing. The side faces of the carton are printed with appropriate packing notices as well as the equipment model number.

Unpacking the UPS requires simple tools such as a screwdriver and an adjustable wrench. To remove the UPS from the shipping container and packing materials, follow these simple steps while referring to Figures 3-3 below.

9) On each side of the cardboard carton there are two bolts (four bolts total) which attach the cardboard carton to the shipping pallet. Remove these four bolts and save them, if necessary, for re-use later.
10) With help from an assistant, raise the cardboard carton straight up from the pallet until it is clear of the unit packaging and ramp.
11) The plywood assembly inside of the cardboard carton is a ramp for rolling the UPS off the shipping pallet. Remove the plywood ramp and set it to one side.
12) Remove any foam packing/cushioning material and save for re-use.
13) Remove the protective plastic cover from the UPS.
14) The UPS is attached to the shipping pallet with two shipping brackets – one on each side of the UPS. Using an adjustable wrench or socket set, remove the two bolts that attach the bracket to the UPS. Remove the two bolts that attach the bracket to the shipping pallet. These bolts should be set aside to secure the ramp to the pallet. Repeat for the other side of the UPS.
15) The UPS has four leveling feet. Be sure to check that the levelers are up against the bottom of the UPS to ensure the UPS rests completely on its four casters.
16) Attach the ramp as shown in Figure 3-3. The bolts used to attach the shipping brackets should be used to secure the ramp to the pallet. **CAUTION: The ramp brackets must align with the holes in the pallet and be secured by the bolts for SAFETY.** With the help from an assistant, carefully roll the UPS off the pallet and down the ramp to the floor of your facility. The UPS may now be easily moved on its casters to the installation location.

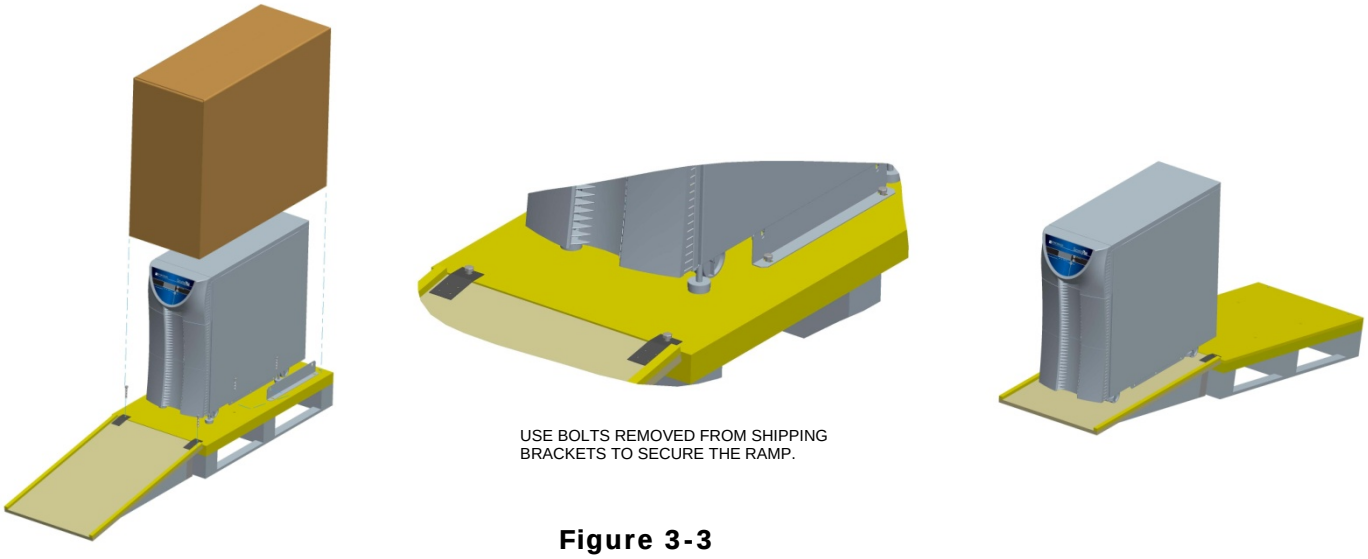

Figure 3-3

3.3 Installation of UPS

For convenient operation, maintenance, and cooling of the equipment, there should be at least 30cm to 50cm (approximately 12” to 20”) of free space around the UPS enclosure and 50cm (approximately 20”) above the UPS enclosure. Be careful that vent openings and UPS fans are kept clear and free of obstructions to ensure good interior ventilation. Ensuring unobstructed flow of cooling air will also improve battery reliability as the battery’s service life will be maximized when the battery is used under normal temperature (20^0 C). It is always preferable to have the UPS installed in an air-conditioned environment. Follow all precautions for installation and use of the UPS.

1. Place UPS on a smooth and level floor. Allow no more than 5^0 departure from vertical to ensure the UPS cannot tip over resulting in injury or damage.
2. Ensure good ventilation by observing the recommended spacing requirements at the back sides and top of the unit.
3. Avoid installing the UPS in direct sunlight.
4. Protect the UPS from humidity and moisture.
5. Never store corrosive, flammable, or explosive substances in the room with the UPS.
6. Do not place articles on or around the UPS. Ensure that ventilation slots and openings are not blocked.
7. Do not allow people to sit on the UPS.
8. The mounting brackets are not seismic; the UPS system should be mounted in place to the building structure flooring prior to operation.
9. To secure the base of the UPS to the flooring, bond the mounting brackets to each side of the UPS base and flooring using the screws provided.

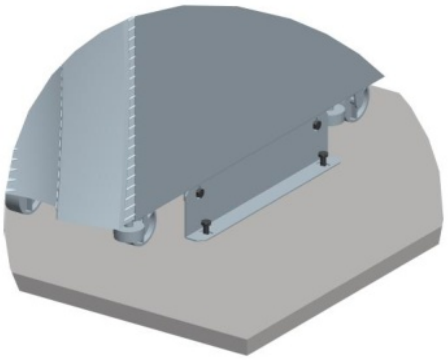

USE FOUR M8 OR 5/16 BOLTS TO SECURE THE TWO MOUNTING BRACKETS TO FLOOR.

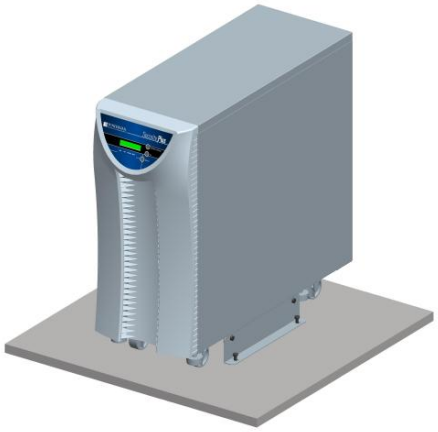

4.0 Equipment Use and Maintenance

4.1 Preparation for Start-up

To ensure proper operation of the UPS, please confirm the following before use:

1. Correct installation of input and output wiring connections.
2. Proper bypass input voltage selection has been made on main terminal connection block at rear of the UPS
3. Input voltage matches the configuration selected in #2 above.
4. The battery circuit breaker on the rear of the UPS is in the “OFF” position.
5. Confirm that computers, instrumentation or other connected loads are turned off

Do not connect loads with high, non-linear current demands (such as laser printers) to the UPS. Do not connect loads with AC motors (such as vacuum cleaners) to the UPS.

4.2 Routine UPS Startup Sequence

After confirming all the above, you are ready to start the UPS.

1. Turn the main input circuit breaker on the back of the UPS to the **ON** position.
2. Turn the battery circuit breaker to the **ON** position.
3. The line indicator light will turn on when AC is applied. After a short delay the **INV** light will turn on if the AC input is within specification. The UPS is now operating normally and is capable of supplying uninterruptible power.
4. Start the connected loads in sequence with highest power loads being started first and lower power loads being started last.

4.3 Routine UPS Shutdown

1. Press the **NORMAL/BYPASS** button on the UPS panel to stop the UPS inverter. After stopping the inverter, the UPS will be in bypass mode.
2. Turn off the main circuit breaker.
3. Turn off the battery circuit breaker.
4. To once again start the UPS, follow the instructions for routine start-up as already discussed.

4.4 Important Battery Issues

If the UPS has been disconnected for a long period, it should be charged for at least four hours before operation can resume. While it is possible to use the UPS during this charging period, it is important to keep in mind that if a power outage occurs, battery runtime may be quite short.

As long as the UPS is connected to a live power source and the UPS input circuit breaker and battery circuit breaker is turned on, the UPS battery will be kept in a charged state.

1. Batteries of different capacity, type, and brand should not be used together. The manufacturer has approved only the type, capacity, and brand of battery originally shipped with the UPS. Please consult the UPS manufacturer before replacing batteries with any batteries not meeting these specifications.
2. When cleaning the outside of the UPS use only a soft cloth and clear water. Do not use oily substances, solvents, or abrasive cleaners, etc.
3. The UPS should be kept away from ignition sources as well as all electrical equipment that may cause sparks.
4. Be careful not to store flammable, explosive, or corrosive substances in the same area as the UPS or any add-on battery cabinets.
5. If the UPS is routinely disconnected for long periods, be sure to regularly connect the UPS and charge the battery to prevent battery damage as the result of self-discharging.

4.5 Frequent Trouble Causes

If the UPS fails to work properly after installation and start-up, please don't automatically assume that a UPS failure has occurred. Please refer to the following steps to try to identify a possible cause.

Problem 1

Main supply and output are normal after start-up but the alarm buzzer is sounding intermittently.

Possible cause: Unstable AC power input as a result of poor input connections at a breaker, wall receptacle, or UPS terminal block.

Solution: Check all input power connections.

Problem 2

After UPS is started, the output voltage is normal, but the UPS is in bypass mode (**BYPASS** light illuminated).

Possible cause: Too much load is connected to the UPS.

Solution: Remove or turn off connected loads in increments until the **BYPASS** light is extinguished. If UPS is overloaded, it may be necessary to install an additional UPS or one with a higher capacity rating.

(Note: Some bypass operations are caused as a result of starting up high inrush loads. In such cases, bypass operation will be temporary, and the UPS will return to normal operation as soon as load inrush current subsides.)

Problem 3

UPS displays and UPS output are normal after start-up. However, the output stops as soon as load is connected to it.

Possible cause #1: UPS is experiencing a severe overload or a circuit short circuit on the output.

Solution: Reduce the load to an adequate amount, or check loads to locate a short circuit. In many cases, short circuits are caused by shorted output adapters or damaged load equipment.

Possible cause #2: Failure to follow the proper load start-up sequence.

Solution: Restart the UPS with no output loads turned on. Then power on the largest loads first and then smallest loads last.

Problem 4

The UPS works properly after start-up, and automatically shuts off after a certain period of time.

Possible cause: The UPS is running on battery (either not powered by AC input or not connected to AC input) and the battery is not fully charged.

Solution: Immediately turn off all switches, and restart the UPS. Verify that AC power is present to the UPS input and that the UPS is operating normally. Charge the battery for a minimum of four hours (preferably to full capacity) before returning to use. Note: Long-period low voltage of the battery will shorten the service life of the battery.

Long term low voltage of the battery will shorten its service life.

Problem 5

After working for a certain period, with a normal input display, the buzzer gives intermittent buzzing and displays battery low voltage simultaneously.

Possible cause: Input power supply has very low voltage causing the UPS work from its battery. When the battery runs low, a low voltage battery condition occurs and the UPS enters into protection status.

Solution: Determine cause of very low input voltage.

Problem 6

UPS is started and working. When a power outage occurs, the UPS fails to output power.

Possible cause: The battery is not connected to the UPS, the battery circuit breaker is open (turn off), or the battery itself is severely damaged.

Solution: Verify that the UPS battery is properly connected, the battery circuit breaker is closed (turned on) and that the battery itself is not damaged or defective.

4.6 Troubleshooting

4.6.1 Overview

In the event of UPS failure, first inspect the UPS and the area around it to determine if there are any obvious reasons for malfunction. Check for external factors such as high temperature or humidity. Check to make sure that the UPS ventilation slots and holes are not obstructed. Carefully observe any messages that may appear in the display window on the front panel of the UPS.

Only simple troubleshooting suggestions are provided here. If you cannot arrive at a clear diagnosis of the problem using the information here or if the information given here is not sufficient to solve your problem, please contact your distributor or the manufacturer for assistance and repair.

4.6.2 Troubleshooting Steps

Problem: Buzzer gives long buzzing, fault light is on, UPS is powered through bypass, and inverter fails.

Possible cause 1: Output overload or short circuit results in UPS automatic shutdown protection.

Solution: Locate and remove source of overload or short circuit

Possible cause 2: Driver or power transistor failure

Solution: Contact distributor or manufacturer

Possible cause 3: Master control board failure.

Solution: Contact distributor or manufacturer

Possible cause 4: UPS Over-temperature protection

Solution: Turn off all loads. Allow UPS to cool down and restart UPS according to routine start-up instructions.

Problem: UPS works properly when power supply is O.K., but it fails to function during power failure.

Possible cause 1: Battery circuit breaker is open (Off)

Solution: Close (turn on) battery circuit breaker

Possible cause 2: Battery failure

Possible cause 3: Battery charger malfunction

Possible cause 4: Poor contact between battery connecting wires or connecting terminals.

Solution: Contact distributor or manufacturer

Problem: Intermittent buzzing of the buzzer when UPS input is normal.

Possible cause: Abnormal input voltage that exceeds the UPS' acceptable input voltage range for the mains power supply.

Solution: Contact electrician to verify state of input voltage to UPS

Problem: UPS works well when computer is in operation. After power failure, UPS works properly but the connected load crashes.

Possible cause: Neutral to ground voltage at UPS input is too high.

Solution: Contact electrician to correct excessive input neutral to ground voltage.

Problem: All of panel indicator lamps are off.

Possible cause: Poor connection or malfunction of display control panel.

Solution: Contact distributor or manufacturer.

5.0 Battery Tray Replacement

5.1 Precautions

Servicing of batteries should be performed or supervised by personnel knowledgeable about batteries and the required precautions. (Please contact Powervar for Battery Replacement)

When replacing batteries, replace with the same type and number of batteries or battery packs.

CAUTION: Risk of explosion if battery is replaced by incorrect type.
Dispose of used batteries according to the instructions.

CAUTION: Do not dispose of batteries in a fire. The batteries may explode.

CAUTION: Do not open or mutilate batteries. Released electrolytes are harmful to the skin and eyes. It may be toxic.

CAUTION: A battery can present a risk of electrical shock and high short-circuit current. The following precautions should be observed when working on batteries:

a) Remove watches, rings, or other metal objects.
b) Use tools with insulted handles.
c) Wear rubber gloves and boots.
d) Do not lay tools or metal parts on top of the batteries.
e) Disconnect charging source prior to connecting or disconnecting battery terminals.
f) Determine if the battery is inadvertently grounded. If inadvertently grounded, remove source from ground. Contact with any part of a grounded battery can result in electrical shock. The likelihood of such shock can be reduced if such grounds are removed during installation and maintenance (applicable to equipment and remote battery supplies not have a grounded supply circuit).

5.1.2 Battery Tray Replacement (8-15kVA)

Reference Fig. 5-3 for the following steps:

1. Flip the DC circuit breaker on the rear panel of the UPS to the ***OFF*** position.
2. Open the lower front door of the UPS.
3. With a screwdriver, remove the metal front panel.

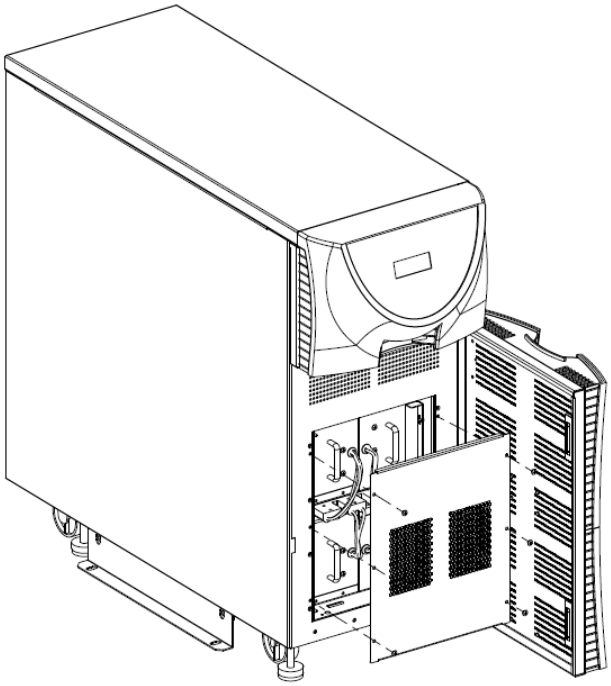

Fig. 5-3

CAUTION: Battery connectors extend past the front of the battery trays. Examine all battery connections prior to removing the front cover panel.

Reference Fig. 5-4 for the following steps:

1. Remove the battery retaining brackets.
2. Unplug the desired battery tray connector from the front of the unit.
3. Lift the front of the tray and pull the tray out straight.
4. Lift the rear of the tray to remove the tray from the battery compartment.
5. Repeat steps 2-4 for additional battery trays.
6. Slide the new POWERVAR battery trays into the empty slots.
7. Make sure the trays are secure and re-connect the battery tray connectors in the front of the unit.
8. Replace the metal bars on the unit.
9. Secure these components back in place with appropriate hardware.
10. Flip the DC circuit breaker on the rear panel of the UPS to the ***ON*** position.

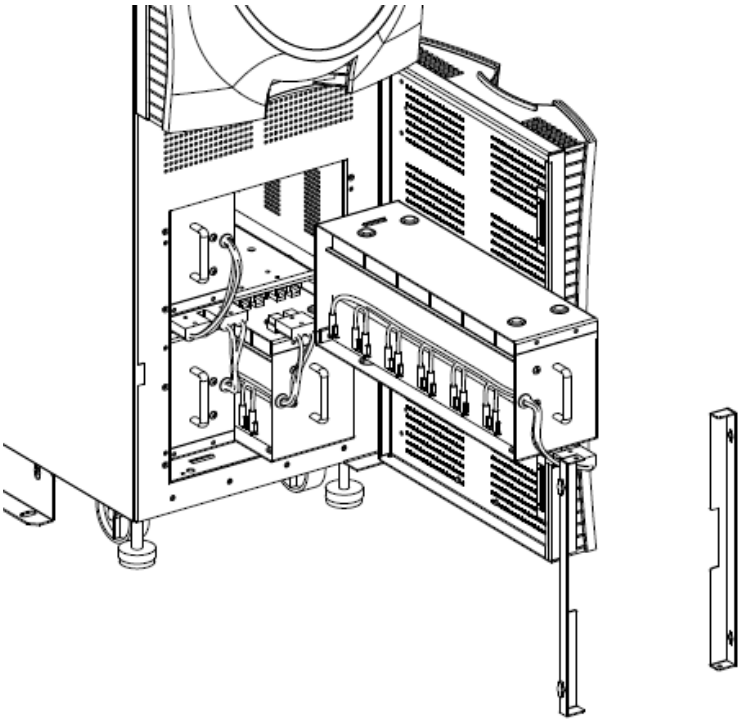

Fig. 5-4

CAUTION: Battery cables are located in between the battery trays. Examine all battery connections to ensure that there are no loose or damaged connections prior to connecting battery trays.

CAUTION: Battery connectors extend past the front of the battery trays. Examine all battery connectors to ensure that there is clearance between the connections and the cover plate before installing cover panels.

6.0 Packing, Transportation and Storage

6.1 Packing

The original shipping container for the UPS consists of a heavy duty inner cardboard carton inside a larger plywood shipping container both of which are securely fastened to a shipping pallet. Should you find it necessary to ship the UPS for service or installation, you should attempt to re-use this original packaging material along with the shipping brackets that originally accompanied the UPS. Follow these simple steps to prepare the UPS for shipment. (Consult Fig. 3-2 on page 26 for visual guidance.)

1. Place the UPS on the shipping pallet.
2. Attach a metal shipping bracket to each side of the UPS frame at the lower edge of the UPS near the shipping pallet. There are two bolt holes in the UPS frame on each side of the UPS for attaching the shipping bracket.
3. Bolt the shipping brackets to the shipping pallet on each side of the UPS by passing bolts through both holes of the shipping bracket and through the shipping pallet on both sides of the UPS. Secure these bolts with flat washers, lock washers, and nuts.
4. Cover the UPS with the protective plastic bag.
5. Place the foam shipping inserts in appropriate places on the UPS and then slide the heavy cardboard container over the UPS.
6. Place the plywood ramp on top of the cardboard container.
7. Place the outer plywood shipping container over the UPS and cardboard inner container, and secure the plywood shipping container to the shipping pallet using two screws on each side of the pallet.

6.2 Transportation

Handle the UPS with care. Avoid violent impact or dropping of the shipping carton. During transportation, be careful to observe packing and shipping notices printed on the sides of the shipping carton. Do not stack

6.3 Storage

The UPS should always be stored in a dry location. Do not expose it to moisture or rain. Be careful to observe storage notices printed on the side of the shipping carton. Store it where the ambient temperature is between 0^0 C and 55^0 C and relative humidity is between 20% and 80%. No harmful gases, corrosive chemicals, flammable or explosive materials should be kept in the storage area with the UPS. The storage environment must be free from strong mechanical vibration, impact, and intense magnetic fields. If not otherwise specified, the storage period of the UPS under the required conditions of this clause is 6 months. During long-term storage, charge the storage battery every 3 months to prevent battery damage due to self discharge.

6.4 Fuse Replacements

The servicing of any fuses in a Security Plus UPS system should be performed by an authorized and qualified service technician. When replacing a fuse, it is imperative that the replacement fuse is the same type and rating. Charger PCB fuses: F1, F2: are a 250V, 5.0 amp fuse. The control PCB fuse is a 125V, 0.25 amp fuse. In the 2kVA and 4kVA UPS systems; the Power PCB uses a 250V, 2.0 amp fuse in F1, a 250V, 20.0 amp fuse in F2, and a 250V, 15.0 amp fuse (Littelfuse 314 Series) in F4 and F5. In the 3kVA, 5.2kVA, and 6kVA UPS systems; the Power PCB uses a 250V, 2.0 amp fuse in F1, a 250V, 25.0 amp fuse in F2, and a 250V, 20.0 amp fuse (Littelfuse 314 Series) in F4 and F5.

7.0 Mechanical Characteristics

7.1 Unit Dimensions/Weights

Model	Height in/mm	Width in/mm	Depth in/mm	Unit Weight lbs/kg
ABCDEF2000-11	29.0/735.5	11.8/299.72	31.7/804.8	215/97
ABCDEF2000-22	29.0/735.5	11.8/299.72	31.7/804.8	221/100
ABCDEF3000-11	29.0/735.5	11.8/299.72	31.7/804.8	294/132
ABCDEF3000-22	29.0/735.5	11.8/299.72	31.7/804.8	300/135
ABCDEF4000-22	29.0/735.5	11.8/299.72	31.7/804.8	317/143
ABCDEF5200-22	29.0/735.5	11.8/299.72	31.7/804.8	348/157
ABCDEF6000-22	29.0/735.5	11.8/299.72	31.7/804.8	348/157
ABCDEF8000-22	35.5/850.0	13.8/349.76	38.6/980.6	449.0/203.7
ABCDEF10.0-22	35.5/850.0	13.8/349.76	38.6/980.6	449.0/203.7
ABCDEF12.0-22	42.3/1080.2	15.75/400.0	44.39/1127.54	719.0/326.1
ABCDEF15.0-22	42.3/1080.2	15.75/400.0	44.39/1127.54	739.0/335.2

7.2 Shipping Dimensions/Weights

Model	Height in/mm	Width in/mm	Depth in/mm	Shipping Weight lbs/kg
ABCDEF2000-11	41.0/1041.4	23.25/590.55	38.5/977.9	310/139
ABCDEF2000-22	41.0/1041.4	23.25/590.55	38.5/977.9	316/142
ABCDEF3000-11	41.0/1041.4	23.25/590.55	38.5/977.9	389/175
ABCDEF3000-22	41.0/1041.4	23.25/590.55	38.5/977.9	395/178
ABCDEF4000-22	41.0/1041.4	23.25/590.55	38.5/977.9	412/185
ABCDEF5200-22	41.0/1041.4	23.25/590.55	38.5/977.9	443/200
ABCDEF6000-22	41.0/1041.4	23.25/590.55	38.5/977.9	443/200
ABCDEF8000-22	56.5/1435.1	25.25/641.35	45.25/1149.35	641.5/291
ABCDEF10.0-22	56.5/1435.1	25.25/641.35	45.25/1149.35	641.5/291
ABCDEF12.0-22	60.2/1530.0	20.1/510.0	48.4/1230.0	807.0/366.0
ABCDEF-15.0-22	60.2/1530.0	20.1/510.0	48.4/1230.0	807.0/366.0

8.0 Warranty

8.1 Basic Warranty

Security Plus Series products (hereafter referred to as “Product”) are warranted to be free from defects in material and workmanship for **three (3) years** from date of shipment from POWERVAR, on the chassis & electronic components and **two (2) years** from date of shipment from POWERVAR on the batteries. This warranty is limited to repairing, replacing, or refurbishing, at POWERVAR’s option, any defective component, circuit board or module within the Product. For Products 3 kVA and below located anywhere, this warranty is limited to POWERVAR depot service. For Products above 3 kVA located in the continental United States, United Kingdom or Germany, this warranty will include, at POWERVAR’s sole discretion, on-site service or POWERVAR depot service. For locations other than those specified herein, this warranty is limited to POWERVAR depot service. See the Limitations of Warranty section below for additional limitations & exclusions.

8.2 Limitations

This limited warranty does not cover any losses or damage resulting from shipment to or from the Customer, or from improper installation, improper application, inappropriate environment, abuse, neglect, unauthorized modifications, adjustments, or repair of the Product. Additionally, any costs related to installation or de-installation of the Product for the purpose of replacement or servicing will be the Customers sole responsibility. POWERVAR makes no warranties, expressed or implied, of merchantability, fitness for a particular purpose, performance, condition, capacity, or otherwise. POWERVAR is not liable for incidental or consequential damages, monetary loss, loss of sales, or loss of business resulting from the failure or malfunction of the Product. Warranty is void on Product where evidence of tampering exists. Improper long-term storage may damage the UPS batteries and invalidate the battery warranty. Disconnecting a UPS from its AC utility power source for an extended period of time results in lost battery charge. To keep the batteries fully charged and maximize the life of the batteries, connect the UPS to an AC power source while it is in storage. If this is not possible, the UPS must be connected to a power source for 24 hours at least once every 4 months, or every 2 months if the ambient temperature is more than 30°C (86°F). Additionally, POWERVAR’s warranty on batteries applies only to Products that are continuously connected to AC mains power, except during utility power outages. Products that are regularly and intentionally disconnected from AC mains power will experience battery discharge/charge cycles that are potentially far more numerous than those for which the battery was designed. As a result, Products used in such applications will experience substantially reduced battery life.

Therefore, POWERVAR’s standard warranty term does not apply in these cases and is supplanted by a **90 day** warranty from time of shipment from POWERVAR. The warranty provided by POWERVAR provides for the replacement of the battery or battery systems in the event that the batteries do not meet the performance specifications as determined by POWERVAR exclusively. All warranty services will be performed during POWERVAR normal, non-holiday business hours (Monday through Friday, 8:00 AM – 5:00 PM CST). Any service required by Customer to be performed outside of normal business hours will be subject to POWERVAR’s prevailing labor rates.

North American address:

1450 Lakeside Drive
Waukegan, IL 60085
Toll Free: (800) 369-7179
Inside Illinois: (847) 596-7000
Fax: (847) 596-7100

International address:

Unit 5, Birch-Kembrey Park
Swindon, Wilts SN2 8UU UK
(PH#) +44 1793 553980
(FAX) +44 1793 535350

www.powervar.com

POWERVAR Solutions for Power Quality® *Waukegan, IL*	**INSTRUCTIONS For PDU**	Procedure: 99021-55R	
		Issue Date: 2-4-13	Page 1 of 1
		Revision: 2.0	
		Responsible: Operations	

Figure 1
Remove 4 cover screws

NOTE:
Bring input from output of ABCDEF10.0-2S only.
Using 4 awg wire
In 1 ½ knockout you have 5 wires
(X1, X2, X3, X4 AND GND)
In ¾ knockout you have only 1 wire
(Isolated ground only)

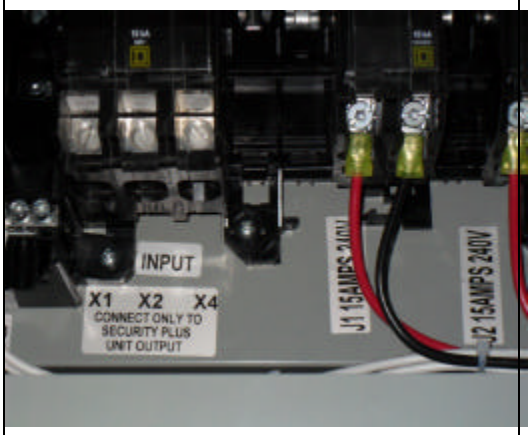

Figure 2
Connect X1 from unit to X1 on PDU
Connect X2 from unit to X2 on PDU
Connect X4 from unit to X4 on PDU

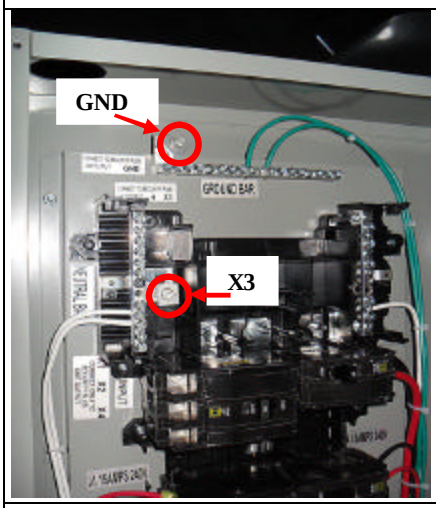

Figure 3
Connect X3 from unit to X3 (Neutral) on PDU
Connect GND from unit to GND on PDU

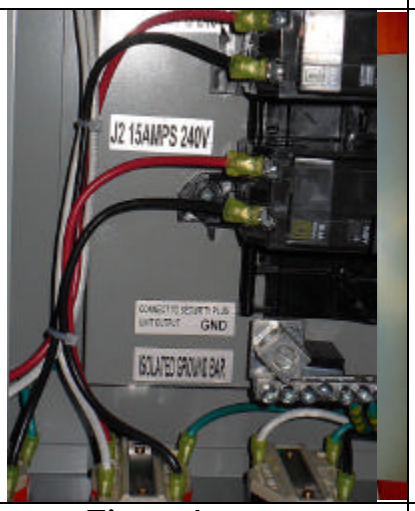

Figure 4

Connect GND from unit to ISOLATED Ground bar on PDU

Figure 5
Replace cover with 4 screws

Written By: V. Kolnik	Approved By: B. Kraemer

CONTROLLED DOCUMENT

POWERVAR – SECURITY PLUS SERIES
DETAILED UPS SPECIFICATION
(12kVA – 15kVA)

12kVA, 15kVA – POWERVAR Isolated On-Line UPS Specifications

Index

1.0 General Description
2.0 Models
3.0 Mechanical Characteristics
4.0 Environmental and Safety Agency
5.0 Input
6.0 Output - Inverter Operation
7.0 Static Bypass Switch (Internal)
8.0 Batteries & Charging
9.0 Low-Impedance Isolation Transformer
10.0 Indicators
11.0 User Interfaces
12.0 Connections
13.0 Additional Options
14.0 Computer Platforms Supported
15.0 Simplified System Electrical Schematic (200/208/220/230/240 VAC System)
16.0 Output Receptacle Panel Connector

12kVA, 15kVA – POWERVAR Isolated On-Line UPS Specifications

1.0 General Description

The following specification describes a UPS with the following characteristics:

1.1 Microprocessor controlled
1.2 On-line
1.3 Output isolation with regulation
1.4 Double conversion
1.5 Automatic battery charger
1.6 Serial and dry-contact user interface
1.7 Self-diagnostic capabilities
1.8 User selectable options configurable via DIP switches or front panel display
1.9 LCD display for system status
1.10 Hot swappable user replaceable batteries
1.11 Frequency conversion (60Hz in / 50Hz out or 50Hz in / 60Hz out)
1.12 Static by-pass

2.0 Models

2.1 High voltage models

2.1.1 200/208/220/230/240 VAC, 50/60HZ

2.1.2 VA/Watts Ratings: 12kVA/10.8kW; 15kVA/13.5kW

2.2 The input voltage shall match the output voltage when configured.

3.0 Mechanical Characteristics

3.1 Size

3.1.1 12kVA/15kVA – – H=44.53”(1080.2) W=15.75”(400) D=44.39”(1127.54)

3.2 Unit Weight

3.2.1 12kVA – 719 lbs. (326.1kg)

3.2.2 15kVA – 739 lbs. (335.2 kg)

3.3 Printed Circuit Board (PCB)

3.3.1 All PCB’s shall be Double Sided/2 Layer minimum
3.3.2 All connection to the PCBA shall be locking, and polarized, except for fast-on connections, which should be kept to a minimum

3.3.3 The assembly shall comply with IPC Class 2 standards

3.3.4 All large components shall be glued to the board with RTV (silicon)

3.4 Fans
3.4.1 Fans shall be designed for easy removal by field service personal from the top of the unit
3.4.2 Fans used in the system should be the same fan in order to reduce spare parts of different fans

3.4.3 Fans shall have fault detection circuitry

4.0 Environmental and Safety Agency

4.1 Temperature

4.1.1 Operating: 0°C to 40°C (32°F to 104°F)

4.1.2 Transit & Storage: -20°C to 60°C (-4°F to 140°F)

4.1.3 Heat sink Over Temperature:

4.1.3.1 If the INVERTER heat sink temperature exceeds 85°C (±5°C), then the system shall transfer to bypass. The system will stay in bypass until the heat sink temperature drops below 70°C (±5°C), and then will transfer back to the inverter. If bypass is not available, the inverter shall shut down, until the temperature drops below 85°C, and the system is turned on again via the front panel switch.

4.2 Altitude

4.2.1 Operating: 2,000 meters (6,500 ft.) above sea level, de-rate 3% above 2,000 meters

4.2.2 Transit: 12,000 meters (40,000ft.)

4.3 Humidity

4.3.1 5%-90% non condensing

4.4 Audible Noise

4.4.1 60dBA@1 meter, from the front of the unit

4.5 EMC

4.5.1 High Voltage:

4.5.1.1 FCC Part 15 J Class A (5dB Margin minimum at all frequencies)

4.5.1.2 EN 55022 Class A/CISPR 22 (5dB Margin minimum at all frequencies)

4.5.1.3 EN 50091-2

4.5.1.4 IEC 61000-3-2

4.6 Safety Agencies

4.6.1 High Voltage:

4.6.1.1 UL1778

4.6.1.2 CSA22.2 No. 107.1

4.6.1.3 IEC 62040, w/CB Report and Certificate

4.6.1.4 CE Marking

4.6.2 All units RoHS compliant

5.0 Input

5.1 Nominal Input

5.1.1 Voltage (Set by Front Panel Display):

5.1.1.1 High Voltage Models

5.1.1.1.1 200/208/220/230/240 VAC

5.1.2 Voltage range :

5.1.2.1 -30% to +15% of selected input voltage

5.1.2.1.1 System shall not transfer to batteries within this range

5.1.2.1.2 System shall be capable of 100% load operation in this range

5.1.2.2 < 6% Hysterisis, under all full load conditions.

5.2 Input Power factor:

5.2.1 Greater than 0.95 (IGBT design preferred)

5.3 Input Current THD:

5.3.1

	25% R-Load	50% R-Load	75% R-Load	100% R-Load
-30%	12.0%	8.0%	5.0%	5.0%
NOM	12.0%	8.0%	5.0%	5.0%
+15%	12.0%	8.0%	5.0%	5.0%

5.3.2 High voltage units must comply with IEC 61000-3-2

5.3.3 Must comply under 100% Resistive Load and while charging the batteries with full charging current

5.4 Frequency:

5.4.2 Manual 50/60Hz selectable

5.4.2.1 Output frequency

A. Narrow Window - ±0.5Hz; 0.1Hz hysteresis; lock frequency to selection outside of window

B. Wide Window - ±3.0Hz; 0.1Hz hysteresis; lock frequency to selection outside of window

5.4.2.2 Manual frequency conversion: input frequency range = 45Hz to 65Hz

5.5 Frequency Tolerance:

5.5.1 ±5 Hz. (before switching to batteries)

5.5.2 ±3 Hz line synchronizes.

5.6 Protection:

5.6.1 Re-settable circuit breaker

5.7 Input connector type:

5.7.1 Hardwire, terminal block for 1Ph input with L1, N, GND.

5.8 Input Current Limit:

5.8.1 150% of nominal input current

5.9 Inrush current:

5.9.1 Less than 6X of rated input current

6.0 Output – Inverter Operation

6.1 Waveform:

6.1.1 Pure sine wave

6.2 Voltage:

6.2.1 High Voltage Models:

6.2.1.1 200/208/220/230/240 VAC (See Section 16)

6.3 Inverter voltage is selected when the input is selected by the front panel display, as the input and output voltage shall match.

6.4 Voltage THD:

6.4.1 Less than 3%THD @ full resistive load

6.5 Voltage Regulation:

6.5.1 ±3% of nominal on output terminal block, under any line or load condition

6.6 Voltage Transient (Step Load) Response:

6.6.1 ± 4% of nominal for a 50% step load change (50% to 100% or 100% to 50%)

6.6.2 ± 6% of nominal for a 100% step load change (0% to 100% or 100% to 0%)

6.7 Voltage Recovery Time:

6.7.1 Return to ±3% of nominal within 3 cycles

6.8 Crest Factor:

6.8.1 3:1 (Peak Current / RMS Current)

6.9 Frequency:

6.9.1 Normal Mode (AC In – AC Out) User selectable by dip switch

6.9.1.1 Normal (Default)

6.9.1.1.1 50/60Hz ±3 Hz

6.9.1.2 Free Running

6.9.1.2.1 50/60 Hz ±0.1 Hz

6.9.2 Battery Mode (DC In – AC Out)

6.9.2.1 50/60Hz ±0.1 Hz

6.10 Overload:

6.10.1 125% for 2 min

6.10.2 150% for 30 Seconds

6.10.3 300% for 500ms (inverter mode), transfer to bypass

6.11 Efficiency:

6.11.1 AC to AC -- Greater than 85% (Input terminal block to output terminal block, include output xfmr)

6.11.2 DC to AC – Greater Than 87% (Battery to Output Terminal Block, includes output xfmr)

6.12 Under output short circuit, the system shall be transferred to bypass, if the bypass is available to clear the fault, the system shall transfer back to inverter.

6.13 Slew rate:

6.13.1 Less than 0.5Hz per second

6.14 Input Back-feed protection:

6.14.1 UPS shall comply with UL 1778 and IEC 62040

6.15 The inverter must function with the following types of loads:

6.15.1 Resistive

6.15.2 Inductive to 0.6 PF

6.15.3 Capacitive to 0.6 PF

6.15.4 Switched Mode Power Supplies without PFC

6.16 The inverter should be designed as a Half Bridge utilizing IGBT's. This should support all the loads listed in 6.15

7.0 Static Bypass Switch (Internal)

7.1 The static bypass switch shall be used to transfer the critical load from UPS supplied power to mains supplied power without interruption.

7.2 The static bypass switch shall be a solid state device rated for 100% continuous duty. It shall not have any mechanical current carrying components.

7.3 The static bypass shall be protected by a semi-conductor fuse. The I^2T of the fuse shall be greater than the I^2T of the SCR to ensure that the fuse will blow before the SCR will fail. The fuse will also need to be sized to handle the overloads without opening.

7.4 The UPS will automatically transfer uninterrupted to bypass mode under the following conditions:

§ Inverter overload exceeds the UPS maximum ratings

§ Inverter failure

§ Batteries are depleted, and bypass is available

7.4.1 If the bypass line is as below, than the transfer shall be inhibited. The BYP LED will blink to indicate that the bypass is unavailable and the output will shut down.

§ Bypass frequency is greater than ±5 Hz

§ Bypass voltage is greater than ±10% of the set nominal voltage

7.5 Manual Transfer:

7.5.1 The system will transfer to bypass without interruption:

§ Bypass frequency is less than or equal to ±5 Hz

§ Bypass voltage is within ±10% of the set nominal voltage

7.5.2 The system will not transfer to bypass if the above conditions are not met. The system shall stay in inverter mode until the conditions are met and the BYP button is pressed again.

7.6 Overload:

7.6.1 125% for 10 minutes

7.6.2 150% for 500ms

7.6.3 1000% for 1 cycle

8.0 Batteries & Charging

8.1 General:

8.1.1 The batteries shall be VRLA

8.1.2 The batteries shall be replaceable while the system is on, without interruption to output (Hot Swappable)

8.2 Backup time:

8.2.1 5 minutes on internal batteries

8.2.2 30 minutes additional, with each added battery cabinet

8.3 Battery Voltage:

8.3.1 The battery string nominal voltage will be 288 VDC (24 Batteries)

8.3.2 Each battery in the string will be a 12V type, with 6 cells

8.4 Battery MFG and Type:

8.4.1 12kVA Models – CSB HR1234WFR/ HR1251WFR or equivalent approved by PVI

8.4.2 15kVA Models – CSB HR1234WFR/ HR1251WFR or equivalent

approved by PVI

8.4.5 Batteries must have flame retardant cases

8.5 Charging Current:

8.5.1 2.5 ADC

8.6 Float Voltage and Temperature Compensation:

8.6.1 The float voltage shall be 2.275V/Cell (327.6 VDC)
8.6.2 The system shall monitor the temperature at the battery compartment. The thermistor shall be as close to the battery case as possible.
8.6.3 If the battery temperature exceeds 35°C, then compensation to the float charge shall be adjusted by the following formula, and the float voltage shall be decreased:

§ -3.0mV/°C/Cell

8.7 Low Battery Shutdown:

8.7.1 The unit shall shut down when the batteries reach 1.67V/Cell
8.7.2 The system shall maintain a full sine wave, without flat topping, under full linear load, down to 1.67V/Cell
8.7.3 The system shall have the capability of having the unit Automatically or Manually Restart upon AC being restored after a low battery shutdown. This shall be settable through the front panel

8.8 Over-temperature Protection:
8.8.1 The battery charger shall be disabled, and charging to the battery shall stop if the battery temperature exceeds 50°C. The charger can enable itself again when the temperature drops to 45°C.
8.8.2 If the temperature is exceeded, a continuous audible alarm and an alarm on the display shall be sent. The alarm can be silenced from the display.
8.8.3 The charger must operate normally in a 40°C external ambient. Proper cooling must be given to the battery compartment

8.9 Reverse Batteries:
8.9.1 The system will have reverse battery protection, which shall be recoverable by replacing a fuse. All components, other than the fuse shall remain in working condition.

8.10 Over-Voltage Protection:
8.10.1 If the battery voltage exceeds 334.0 VDC, the charger shall be turned off, and an alarm sent.

8.11 External Battery Cabinets:
8.11.1 The external battery cabinets will have its own charger, which will get AC power from the UPS.

8.12 Batteries must be mechanically disengaged for safe transport per DOT regulation via external jumper

8.13 System must be supplied with a DC breaker with a method of shunt trip for computer room applications.

9.0 Low-Impedance Isolation Transformer

9.1 General:

9.1.1 Transformer efficiency shall be greater than 95%, only if we meet section 6.11.1

9.1.2 The input impedance shall be less than 4%, all winding combinations

9.1.3 The transformer shall have less than 3% voltage regulation

9.1.4 The transformer shall be UL recognized under OBJY2, UL Class H (180°C) or greater

9.1.5 The transformer shall be constructed with copper wire only.

9.2 Let Through Voltage:

9.2.1 Normal Mode – less than 10 Vpk

9.2.2 Common Mode – less than 0.5 Vpk

10.0 Indicators

10.1 Front panel will have LCD display for the following:

10.1.1 Input Frequency (Hz)

10.1.2 Output Frequency (Hz)

10.1.3 Input voltage (VAC)

10.1.4 Output Voltage (VAC)

10.1.5 % LOAD

10.1.6 Alarm (Overload, Low Battery)

10.1.7 Battery Status (VDC, % remaining)

10.1.8 Unit Status (Normal/Inverter, Bypass, Backup)

10.1.9 Fault

- Input over voltage
- Output over voltage
- DC over voltage
- Output over current
- Overheat
- Output under voltage
- DC under voltage

10.2 Intermittent Audible alarm for:

10.2.1 Input Power Failure/Battery Discharging

10.2.2 Frequency out of range

10.2.3 Overload <110%

10.2.4 Delete

10.2.5 Battery failure

10.2.6 General Fault

10.3 Continuous alarm for

10.3.1 Overload >110%

10.3.2 Low Battery

10.3.3 UPS failure

10.4 Push button for Alarm silence/reset/test through Front Panel Display

10.5 Emergency Power Off (EPO) connector TBD located on rear panel. (EPO must turn off entire unit.)

10.6 EPO shall trip input and battery circuit breakers.

10.7 EPO should turn off inverter and battery charger.

11.0 User Interface (Separate Serial Communication Protocol to be developed)

11.1 DB-9 female connection for serial communications/simulated dry contacts

Pin 1: Not used.

Pin 2: Output, RS232 Transmit data.

Pin 3: Output, RS232 Receive data, and UPS shutdown command.

Pin 4: Output, simulated contact closure for AC fail, normally open pin.

Pin 5: Common Ground

Pin 6: Output, Simulated contact closure for low battery warning, normally open pin.

Pin 7: Output, Simulated contact closure for AC fail, normally closed pin.

Pin 8: Output, AC fail signal (high to low signal)

Pin 9: NC

11.2 USB connector for communications to a PC.

12.0 Connections

12.1 Terminal block for hardwire connection to distribution (Breaker panel)

13.0 Additional Options

13.1 SNMP Ethernet adapter (Internal).

13.2 Software for unattended shutdown, control, and data logging.

14.0 Computer Platforms Supported

14.1 Windows XX, Linux, Unix, and Solaris.

12kVA, 15kVA – POWERVAR Isolated On-Line UPS Specifications

15.0 Simplified System Electrical Schematic (200/208/220/230/240 VAC System)

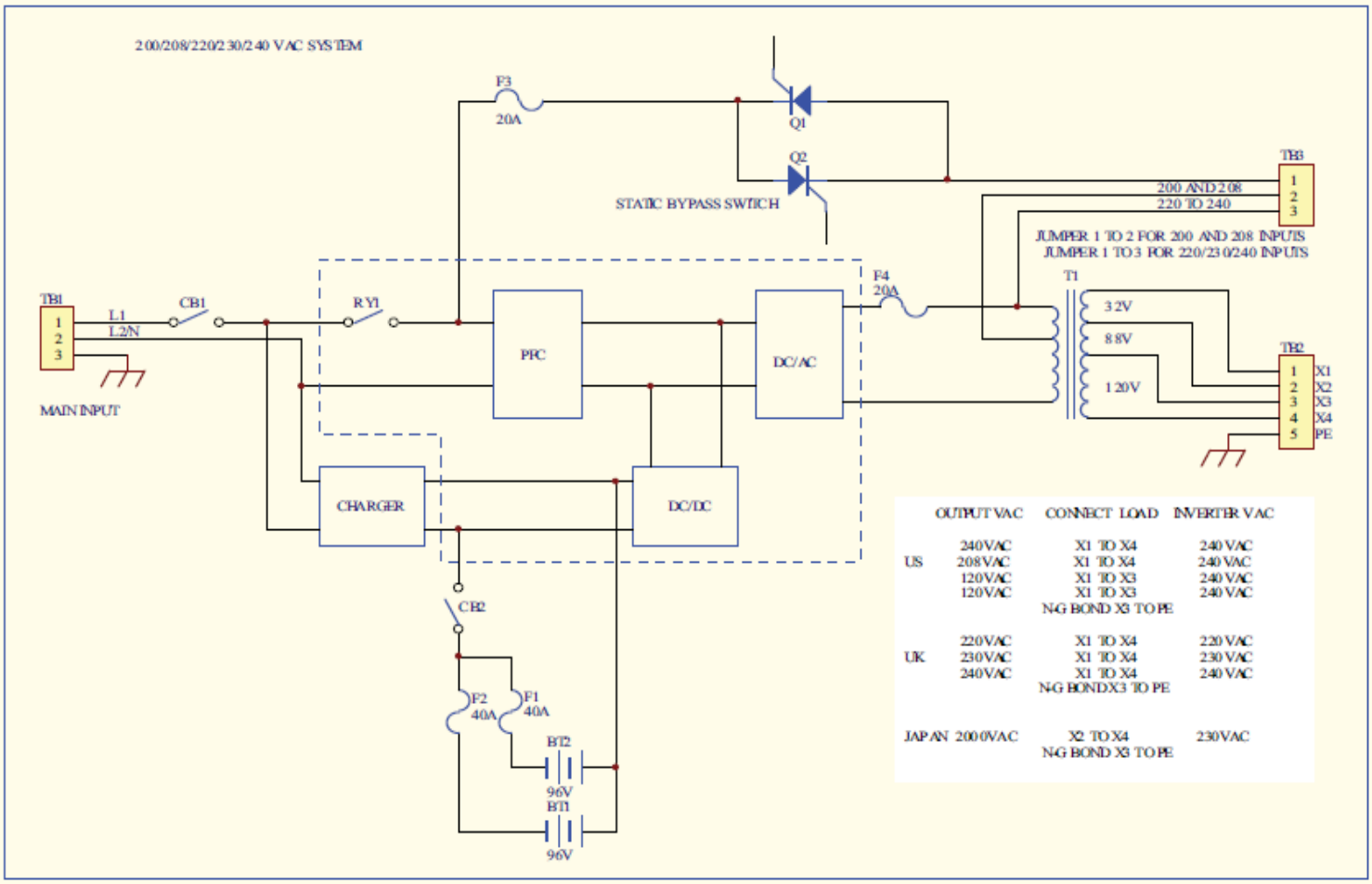

16.0 Output Receptacle Panel Connector

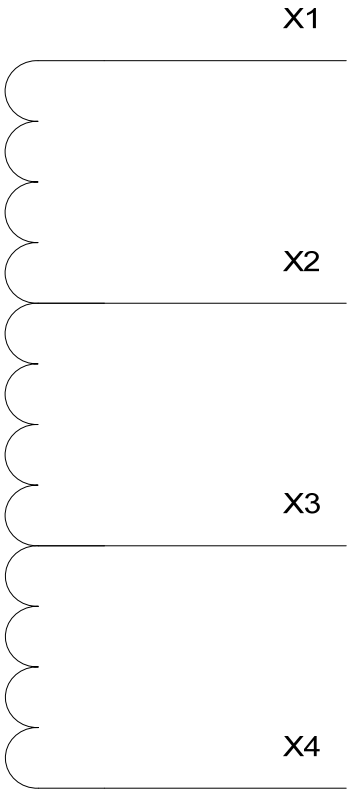

HIGH VOLTAGE
TRANSFORMER

HIGH VOLTAGE
X1-X4 220/ 230/ 240
X2-X4 200/ 208
X1-X3 120
X4-X3 120

X1	X2	X4
X1	X3	X4

HIGH VOLTAGE
RECEPTACLE PANEL
PIN-OUT

POWERVAR
Solutions for Power Quality®

SPECIFICATIONS

FRONT **SIDE** **REAR**

	Model	ABCDEF15.0-22				
	Topology	True On-Line, Double Conversion, IGBT Design, Internal Isolation Transformer				
INPUT	Voltage (VAC)	200	208	220	230	240
	Voltage Range (VAC)	140-230	146-239	154-253	161-264	168-276
	Voltage Tolerance	+15% ~ -30% before switching to batteries				
	Frequency (Hz)	50/60				
	Frequency Tolerance	42Hz to 69Hz before switching to batteries				
	Input PF	>0.95				
	Input Current THD	< 5.0%				
	Input Connection	Hardwired Standard; 2 wire + GROUND				
	Input Capacity	16141VA/ 16141W				
OUTPUT	Capacity	15000VA/13500W				
	Voltage (VAC)	200	120/208/240	220	230	120/208/240
	Voltage Regulation	±3.0% Max; ±1.0% Normal				
	Output Voltage THD	<3.0%				
	Power Factor	0.9				
	Step Load Response	±4.0% for 50% step load change ±6.0% for 100% step load change Return to ±3.0% of nominal within 3 cycles				
	Crest Factor	3:1				
	Frequency (Hz)	50 or 60				
	Frequency Regulation	±0.1Hz				
	Overload	125% for 2 minutes 150% for 30 seconds 300% for 500ms				
	Efficiency	AC-AC >87.0% DC-AC >85.0%				
	Common Mode Noise	< 0.5Vrms				
	Output Connection	Hardwired Standard; Output Receptacles Optional (Consult factory)				
BYPASS	Input Voltage (VAC)	200	208	220	230	240
	Output Voltage (VAC)	200	120/208/240	220	230	120/208/240
	Transformer Voltage Regulation	±3.0%				
	Overload	125% for 10 minutes 150% for 500ms 1000% for 1 cycle				
	Efficiency	>95.0%				

BATTERY	Voltage (VDC)	288.0, nominal 327.6, float
	Battery	12V, 51W flame retardant High Rate, Sealed Lead-Acid
	Quantity	24
	Charge Current (ADC)	2.5
	Backup Time (min)	>5.0
	Recharge Time	8 Hours to 90%
ENVIRONMENT	Temperature (°C)	0 to 40, operating -20 to 60, transit
	Altitude (m)	2,000, operating 12,000, transit
	Humidity	5.0% to 90.0%, non condensing
	Audible (dBA)	55-60 @ 1m from front of unit
	Heat Dissipation (BTU/hr)	6334
AGENCIES	EMC	FCC Part 15J Class A EN 55022 Class A/ CISPR 22 EN 50091-2 IEC 61000-3-2
	Safety Agencies	UL1778, 4th Ed. cUL to CSA22.2 No.107.1 IEC62040, w/CB report and certificate CE IEC61000-4-2, Electrostatic Discharge IEC61000-4-3, Radiated Electromagnetic Field Immunity IEC61000-4-4, Electrical Fast Transient/ Burst Immunity IEC61000-4-5, Surge Immunity IEC61000-4-6, Immunity to Conducted Radio Frequency Disturbances IEC61000-4-8, Power Frequency Magnetic Field Immunity IEC61000-4-11, Voltage Dips, Short Interruptions, and Voltage Variations
	RoHS	All units are RoHS compliant
OTHER	Communication	RS-232 USB DB-9 Dry Contacts Internal SNMP Adapter (option)
	Unit Weight	739.0 lbs./ 335.2kg
	Shipping Weight	827.0 lbs./ 375.1kg

*Hardwire unit is standard. Receptacle panel is optional. Contact factory for part numbers.

NOISE REJECTION-ISOLATION: With unit under power and an ANSI/IEEE C62.41Cat. A pulse applied either normal or common mode at the input, the noise output voltage will be less than 10V normal mode and less than 0.5V common mode in all four quadrants (CM-NM, NM-NM, CM-CM, NM-CM).
SURGE VOLTAGE WITHSTAND CAPABILITY: Tested under power to ANSI/IEEE C62.41 Cat. A & B (formerly IEEE587-1980). Cat. A - 6000V @ 200 amps, 0.5 usec risetime, 100 kHZ decay, Cat. B - 6000V @ 500 amps, 0.5 usec risetime, 100 kHZ decay.

Compatible External (Extended Run) Battery Cabinets:
Model: D28848-22 Description: 2 String x 24 (48 Batt) Extended Run Battery Cabinet

ABCDEF15.0-22 TYPICAL RUN-TIMES (MINs)				
	25% (3375 W)	50% (6750 W)	75% (10125 W)	100% (13500 W)
Internal Batteries Only	25	13	7	5
Internal + 1) D28848-22	120	50	30	22
Internal + 2) D28848-22	230	100	60	45
Internal + 3) D28848-22	350	150	100	70
Internal + 4) D28848-22	500	220	130	90
Internal + 5) D28848-22	650	275	170	110

Notes: Run-Times are based on new fully charged batteries at 25 deg C ambient.

Battery Life Disclaimer: POWERVAR's standard battery warranty applies only to UPS and UPM products which are continuously connected to AC mains power, except during utility power outages. Products which are regularly and intentionally disconnected from AC mains power will experience battery discharge/charge cycles potentially far more numerous than those for which the battery was designed. As a result, products used in such applications will experience substantially reduced battery life. For that reason, POWERVAR's standard battery warranty does not apply for applications in which the UPS or UPM product is regularly and intentionally disconnected from AC mains power. POWERVAR UPS and UPM products used in such applications shall receive a 90 day warranty on batteries.

Warranty/Support: POWERVAR warrants the electronics and transformers used in its uninterruptible power supplies to be free from defects in materials and workmanship for a period of three years from the date of shipment. Batteries are warranted for a period of two years from the date of shipment for standby use; 90 days for cyclic use. For North American service or support on any POWERVAR product, please contact POWERVAR Technical Support at (800) 369-7179 (in Illinois call (847-596-7000). For service and support in EMEA, contact POWERVAR, Ltd. in the United Kingdom at +44 (0) 1793 553980. Or visit the POWERVAR website at **www.powervar.com**.

POWERVAR, Inc. - 1450 Lakeside Drive, Waukegan, IL 60085

General Decision Number: WA120030 06/01/2012 WA30

Superseded General Decision Number: WA20100045

State: Washington

Construction Type: Building

County: Benton County in Washington.

BUILDING CONSTRUCTION PROJECTS (does not include single family homes or apartments up to and including 4 stories).

Modification Number	Publication Date
0	01/06/2012
1	01/27/2012
2	04/06/2012
3	04/13/2012
4	06/01/2012

ASBE0082-001 08/02/2011

	Rates	Fringes
ASBESTOS WORKER/HEAT & FROST INSULATOR	$ 31.42	15.65

BRWA0001-002 06/01/2009

	Rates	Fringes
BRICKLAYER	$ 26.81	12.31

CARP9003-003 09/01/2009

	Rates	Fringes
CARPENTER (Including Cabinet Installation, Drywall Hanging and Form Work)	$ 27.73	10.56

ZONE PAY:

ZONE 1	0-45 MILES	FREE
ZONE 2	46-65 MILES	$2.00/PER HOUR
ZONE 3	66-100 MILES	$3.00/PER HOUR
ZONE 4	OVER 100 MILES	$4.50/PER HOUR

DISPATCH POINTS:
PASCO (515 N. Neel Street) or Main Post Office of established residence of employee (Whichever is closest to the worksite).

SPOKANE (127 E. AUGUSTA AVE.) or Main Post Office of established residence of employee (Whichever is closest to the worksite).

WENATCHEE (27 N. CHELAN) or Main Post Office of established residence of employee (Whichever is closest to the worksite).

COEUR D' ALENE (1839 N. GOVERNMENT WAY) or Main Post Office of established residence of employee (Whichever is closest to the worksite).

MOSCOW (302 N. JACKSON) or Main Post Office of established residence of employee (Whichever is closest to the worksite).

ELEC0112-014 06/01/2011

	Rates	Fringes
ELECTRICIAN	$ 35.90	3%+14.63

ELEC0112-015 06/01/2010

	Rates	Fringes
ELECTRICIAN (Low Voltage Wiring Only)	$ 24.67	8.48

ENGI0370-017 06/01/2011

	Rates	Fringes
Power equipment operators:		
GROUP 1	$ 24.76	12.05
GROUP 2	$ 25.08	12.05
GROUP 3	$ 25.69	12.05
GROUP 4	$ 25.85	12.05
GROUP 5	$ 26.01	12.05
GROUP 6	$ 26.29	12.05
GROUP 7	$ 26.56	12.05
GROUP 8	$ 27.66	12.05

ZONE DIFFERENTIAL (Add to Zone 1 rate): Zone 2 - $2.00

Zone 1: Within 45 mile radius of Spokane, Pasco, Washington; Lewiston, Idaho

Zone 2: Outside 45 mile radius of Spokane, Pasco, Washington; Lewiston, Idaho

POWER EQUIPMENT OPERATORS CLASSIFICATIONS

GROUP 1: Compactor; Drill Oiler; Rollers, all types on

subgrade, including seal and chip coatings

GROUP 2: Fork Lift

GROUP 3: Bulldozer (up to D-6 or equivalent)

GROUP 4: Drills (churn, core, calyx or diamond); Oiler; Loaders (overhead & front-end, under 4 yds. R/T); Vacuum Drill (reverse circulation drill under 8 inch bit)

GROUP 5: Backhoe (Under 45,000 gw); Trackhoe/Excavator (hoe Ram) (under 3/4 yd.); Cranes (25 tons & under), Drilling Equipment(8 inch bit & over) (Robbins, reverse circulation & similar)

GROUP 6: Asphalt Roller; Backhoe (45,000 gw and over to 110,000 gw); Trackhoe/Excavator (Hoe Ram) (3/4 yd. to 3 yd.); Compactor (self-propelled with blade); Cranes (over 25 tons, to and including 45 tons), Bulldozer, 834 R/T & similar; Loader Operator (front-end & overhead, 4 yds. incl. 8 yds.); Scrapers, all, rubber-tired; Screed Operator

GROUP 7: Backhoe (Over 110,000); Trackhoe/Excavator (Hoe Ram) (3 yds & over); Cranes (over 45 tons to but not including 85 tons); Loaders (overhead & front-end, over 8 yds. to 10 yds.); Rubber-tired Scrapers (multiple engine with three or more scrapers); Blade

GROUP 8: Cranes (85 tons and over, and all climbing, overhead,rail and tower); Loaders (overhead and front-end, 10 yards and over)

BOOM PAY: (All Cranes, Including Tower)
180 ft to 250 ft $ .50 over scale
Over 250 ft $ .80 over scale

NOTE:
In computing the length of the boom on Tower Cranes, they shall be measured from the base of the Tower to the point of the boom.

HAZMAT:
Anyone working on HAZMAT jobs, working with supplied air shall receive $1.00 an hour above classification.

IRON0014-012 01/01/2012

	Rates	Fringes
IRONWORKER (Ornamental, Reinforcing and Structural).....	$ 31.35	20.10

LABO0238-014 06/01/2011

Rates Fringes

LABORER: Mason Tender - Brick...$ 23.95 9.95

LABO0238-021 06/01/2011

Rates Fringes

LABORER
GROUP 1.....$ 21.31 10.00
GROUP 2.....$ 23.41 10.00
GROUP 3.....$ 23.68 10.00
GROUP 4.....$ 23.95 10.00

Zone Differential (Add to Zone 1 rates): Zone 2 - $2.00

BASE POINTS: Pasco
Zone 1: 0-45 radius miles from the main post office.
Zone 2: 45 radius miles and over from the main post office

LABORERS CLASSIFICATIONS

GROUP 1: Flagman

GROUP 2: Common or General Laborer; Form-Stripping

GROUP 3: Chipping Guns; Concrete Saw; Pipelayer

GROUP 4: Grade Checker; Gunite; Vibrating Plate

PAIN0054-004 06/01/2008

Rates Fringes

DRYWALL FINISHER/TAPER.....$ 22.78 8.88

PLAS0072-008 06/01/2011

Rates Fringes

CEMENT MASON/CONCRETE FINISHER...$ 25.01 11.32

Zone Differential (Add to Zone 1 rates): Zone 2 - $2.00

BASE POINTS: Spokane, Pasco, Lewiston, Wenatchee

Zone 1: 0 - 45 radius miles from the main post office

Zone 2: 45 radius miles from the main post office

PLUM0598-013 06/01/2011

Rates Fringes

PLUMBER.....$ 45.85 22.39

PLUM0598-015 06/01/2011

Rates Fringes

PIPEFITTER.....$ 45.85 22.39

---

* ROOF0189-011 07/01/2011

Rates Fringes

ROOFER (Includes Roof Tear
Off, Waterproofing, and
Installation of Metal Roofs).....$ 23.69 10.02

SFWA0699-005 04/01/2012

Rates Fringes

SPRINKLER FITTER (Fire
Sprinklers).....$ 28.93 19.60

SHEE0066-019 08/01/2011

Rates Fringes

Sheet Metal Worker (Including
HVAC Duct).....$ 27.51 16.90

SUWA2009-018 05/22/2009

Rates Fringes

FLOOR LAYER: Carpet and Vinyl....$ 19.90 4.83

INSULATOR - BATT.....$ 13.58 0.21

LABORER: Handheld Drill.....$ 17.17 5.36

LABORER: Irrigation.....$ 11.58 0.00

LABORER: Landscape.....$ 11.48 0.00

LABORER: Mason Tender -
Cement/Concrete.....$ 9.00 0.00

METAL BUILDING ERECTOR.....$ 12.23 3.86

OPERATOR: Bobcat/Skid
Steer/Skid Loader.....$ 16.86 0.00

OPERATOR: Concrete Pumper.....$ 22.30 5.27

OPERATOR: Mechanic.....$ 24.33 4.33

PAINTER: Brush Only.....$ 14.50 0.50

PAINTER: Roller.....$ 22.62 0.25

PAINTER: Spray.....$ 22.47 0.00

TILE SETTER.....$ 13.50 0.00

TRUCK DRIVER: Semi-Trailer
Truck.....$ 20.59 5.56

TEAM0760-006 06/01/2009

	Rates	Fringes
Truck drivers: (ANYONE WORKING ON HAZMAT JOBS SEE FOOTNOTE A BELOW)		
ZONE 1:		
GROUP 3	$ 24.37	10.86
GROUP 4	$ 24.70	10.86
GROUP 5	$ 24.81	10.86
GROUP 6	$ 24.97	10.86
GROUP 7	$ 25.51	10.86
GROUP 8	$ 25.83	10.86

Zone Differential (Add to Zone 1 rate: Zone 1 - $2.00)

BASE POINTS: Spokane, Moses Lake, Pasco, Lewiston

Zone 1: 0-45 radius miles from the main post office
Zone 2: Outside a 45 mile radius from the main post office

TRUCK DRIVERS CLASSIFICATIONS

GROUP 3: Trucks, side, end, bottom and articulated end dump (3 yards to and including 6 yds.)

GROUP 4: Trucks, side, end, bottom and articulated end dump (over 6 yds. to & including 12 yds.)

GROUP 5: Trucks, side, end, bottom and articulated end dump (over 12 yds. to & including 20 yds.)

GROUP 6: Trucks, side, end, bottom and articulated end dump (over 20 yds. to & including 40 yds.)

GROUP 7: Truck, side, end, bottom and articulated end dump (over 40 yds. to & including 100 yds.)

GROUP 8: Trucks, side, end, bottom and articulated end dump (over 100 yds.)

FOOTNOTE A - Anyone working on a HAZMAT job, where HAZMAT cerfification is required, shall be compensated as a premium, in addition to the classification working in as follows:

LEVEL C-D: - $.50 PER HOUR - This level may use an air purifying respirator or additional protective clothing.

LEVEL A-B: - $1.00 PER HOUR - Uses supplied air in conjunction with a chemical splash suit or fully encapsulated suit with a self-contained breathing apparatus.

Employees shall be paid Hazmat pay in increments of four(4) and eight(8) hours.

WELDERS - Receive rate prescribed for craft performing operation to which welding is incidental.

==========

Unlisted classifications needed for work not included within the scope of the classifications listed may be added after award only as provided in the labor standards contract clauses (29CFR 5.5 (a) (1) (ii)).

The body of each wage determination lists the classification and wage rates that have been found to be prevailing for the cited type(s) of construction in the area covered by the wage determination. The classifications are listed in alphabetical order of "identifiers" that indicate whether the particular rate is union or non-union.

Union Identifiers

An identifier enclosed in dotted lines beginning with characters other than "SU" denotes that the union classification and rate have found to be prevailing for that classification. Example: PLUM0198-005 07/01/2011. The first four letters , PLUM, indicate the international union and the four-digit number, 0198, that follows indicates the local union number or district council number where applicable , i.e., Plumbers Local 0198. The next number, 005 in the example, is an internal number used in processing the wage determination. The date, 07/01/2011, following these characters is the effective date of the most current negotiated rate/collective bargaining agreement which would be July 1, 2011 in the above example.

Union prevailing wage rates will be updated to reflect any changes in the collective bargaining agreements governing the rate.

Non-Union Identifiers

Classifications listed under an "SU" identifier were derived from survey data by computing average rates and are not union rates; however, the data used in computing these rates may include both union and non-union data. Example: SULA2004-007 5/13/2010. SU indicates the rates are not union rates, LA indicates the State of Louisiana; 2004 is the year of the survey; and 007 is an internal number used in producing the wage determination. A 1993 or later date, 5/13/2010, indicates the classifications and rates under that identifier were issued as a General Wage Determination on that date.

Survey wage rates will remain in effect and will not change until a new survey is conducted.

WAGE DETERMINATION APPEALS PROCESS

1.) Has there been an initial decision in the matter? This can be:

* an existing published wage determination
* a survey underlying a wage determination
* a Wage and Hour Division letter setting forth a position on a wage determination matter
* a conformance (additional classification and rate) ruling

On survey related matters, initial contact, including requests for summaries of surveys, should be with the Wage and Hour Regional Office for the area in which the survey was conducted because those Regional Offices have responsibility for the Davis-Bacon survey program. If the response from this initial contact is not satisfactory, then the process described in 2.) and 3.) should be followed.

With regard to any other matter not yet ripe for the formal process described here, initial contact should be with the Branch of Construction Wage Determinations. Write to:

Branch of Construction Wage Determinations
Wage and Hour Division
U.S. Department of Labor
200 Constitution Avenue, N.W.
Washington, DC 20210

2.) If the answer to the question in 1.) is yes, then an

interested party (those affected by the action) can request review and reconsideration from the Wage and Hour Administrator (See 29 CFR Part 1.8 and 29 CFR Part 7). Write to:

Wage and Hour Administrator
U.S. Department of Labor
200 Constitution Avenue, N.W.
Washington, DC 20210

The request should be accompanied by a full statement of the interested party's position and by any information (wage payment data, project description, area practice material, etc.) that the requestor considers relevant to the issue.

3.) If the decision of the Administrator is not favorable, an interested party may appeal directly to the Administrative Review Board (formerly the Wage Appeals Board). Write to:

Administrative Review Board
U.S. Department of Labor
200 Constitution Avenue, N.W.
Washington, DC 20210

4.) All decisions by the Administrative Review Board are final.

==========

END OF GENERAL DECISION