Pacific Northwest
NATIONAL LABORATORY
Proudly Operated by Battelle Since 1965

Invitation for Bid
305227
Table of Contents
EMSL Fall Protection Install

Invitation For Bid
Instructions to Bidders
Representations and Certifications

Part I – The Schedule

Section A.	Solicitation, Offer and Award
Section B.	Supplies or Services
Section C.	Description of the Work
Section D.	Packaging and Marking
Section E.	Inspection and Acceptance
Section F.	Period of Performance
Section G.	Contract Administration
Section H.	Special Provisions

Part II – Contract Clauses

Section I. General Provisions Fixed Price Construction Contracts

3113b – ES&H Clauses

QA 171, 183, 360

Part III – Attachments Section J

Attached Documents:

1. SOW/Div. 1/General Requirements
2. Project Drawings (Including Engineering Change Notices)
3. Project Job Planning Package (JPP)
4. Project Workplace Exposure Assessment (WEA)
5. Representations and Certifications
6. Davis-Bacon Wage Determination
7. Hanford Site Stabilization Agreement (HSSA)

Forms On-line at: http://www.pnnl.gov/contracts/contractdocuments.aspx

1. Acceptance of Completed Work
2. Bid Bond – SF 24
3. Certificate of Liability Insurance – ACORD 25
4. Certified Payroll – WH-347
5. Construction Badge Request
6. Contract Daily Report
7. Contract Release
8. Injury/Illness Report
9. Invoice Template
10. OSHA Record Keeping
11. Payment Bond – SF 25a
12. Performance Bond – SF 25
13. Recycling Submittal Form
14. Request for Information
15. Statement and Acknowledgement - SF1413
16. Submittal Request

Pacific Northwest
NATIONAL LABORATORY
Proudly Operated by Battelle Since 1965

Invitation For Bid
305227

EMSL Fall Protection Install

Battelle Memorial Institute, Pacific Northwest Division (Battelle) in connection with Battelle's Operation and Maintenance of the U.S. Department of Energy's Pacific Northwest National Laboratory (PNNL) at Richland, Washington under Contract number DE-AC05-76RL01830 is pleased to invite bids for the ***EMSL Fall Protection Install*** to be installed under this Invitation For Bid (IFB).

IFB Number:	**305227**
Title:	***EMSL Fall Protection Install***
Location:	3335, Innovation Blvd, Richland, WA 99352
Issue Date:	July 10, 2015
Closing Date/Bid Opening:	Thursday July 23, 2015, 1:00 PM PDT, BSF Room 1016 (McClintock)
NAICS Code:	**236220 (Commercial & Institutional Building Construction)**
Restriction:	Small Business
Contract Type:	Firm Fixed Price
Basis of Award:	Sealed Bid
Contractor Qualification Requirements:	***Prime Contractor* shall be pre-qualified** prior to *contract award*; likewise, ***Subcontractors to a Prime* Contractor** performing work **shall be prequalified** prior to *starting work.* Note - An Experience Modification Rate (EMR) of less than or equal to 0.9 for Prime Contractor (1.0 for Subcontractors) and no willful OSHA/State Labor & Industries Citations over the past three years is needed to meet the pre-qualification requirement. To apply for pre-qualification, see: https://ebs.pnl.gov/.
Price Range:	Less than $25,000
Duration / Completion:	Final completion no later than 8/31/2015
Prebid Meeting / Job Walk:	**The *MANDATORY* Prebid Meeting** will be conducted at **1:00 PM, Thursday, July 16, 2015,** at the EMSL Lobby; 3335 Innovation Blvd, Richland, WA 99352. Badges Are Required.
Contract Specialist:	**Name:** Garrett Hyatt **Office Phone:** 509-371-7591 **Email Address:** garrett.hyatt@pnnl.gov

1. SYNOPSIS

Contractor shall furnish all the labor, supervision, sub-contractors, equipment and materials required to install 8 ea. safety tie-off anchors as per this Statement of Work, General Requirements, Dwg. #: S 1-201 /Sht. I/Rev. 0., Job Planning Package (JPP), Work Exposure Assessment (WEA) and other attached Contract Documents.

2. INQUIRIES & SUBMISSION OF BIDS

2.1. All inquiries shall be submitted in writing by mail or email.

2.2. Bids and modifications shall be submitted in sealed envelopes or packages.

2.3. Bids shall contain the following completed documents:

- Solicitation, Offer & Award Form
- Representations & Certifications
- Certificate of Liability Insurance
- Copy of Bidder's Washington State Contractor's License
- Bid Bond
- Prime and all subcontractors must flow down HSSA. Provide documentation.

2.4. Failure to submit **all** of the above required documents with your bid shall cause your bid to be determined non-responsive.

3. COMMUNICATIONS

3.1. **Submission of Bids**.

3.1.1. Bids shall be received on or before the due date at the following Battelle address:

Battelle Memorial Institute, Pacific Northwest Division
Attention: Garrett Hyatt (RE: IFB Number: 305227)
902 Battelle Boulevard, Mail Stop: J2-05
Richland, Washington 99352

Or,

Sealed Bids may be hand delivered to the public bid opening, to be held on the closing date, July 23, 2015, at 1:00 PM PDT in the BSF, McClintock Conference Room No. 1016, *badges are not required.*

3.1.2. Bids and bid modifications shall be submitted in sealed envelopes or packages.

3.1.3. Telegraphic, Facsimile, and Electronic bids will NOT be accepted.

3.2. **Inquiries:** All inquiries, whether by phone, fax, or written shall be addressed to:

Battelle Memorial Institute, Pacific Northwest Division
Attention: Garrett Hyatt (RE: IFB Number: 305227)
902 Battelle Boulevard, Mail Stop: J2-05
Richland, Washington 99352

Phone Numbers, Fax Number, and Email Address for the Contract Specialist are on Page 1.

3.3. **Requests for Clarification / Interpretation:** If the Bidder finds discrepancies, omissions, or is in doubt as to the true meaning of any part of the contract documents, *Bidder MUST submit a WRITTEN request* for clarification or interpretation using Request for Information (RFI) form at http://www.pnnl.gov/contracts/contractdocuments.aspx and address it to the Contract Specialist listed on Page 1, *no later than 1:00 p.m. PST; 07/20/2015*. Submittals *may not be considered if submitted after this time*.

Regards,

Garrett V. Hyatt

Sr. Contracting Professional

Invitation For Bid # 305227 Instructions to Bidders

EMSL Fall Protection Install

Table of Contents

1. NAICS Classification: 236220 1
2. Commencement, Prosecution, and Completion of Work [Adapted from FAR 52.211- 10 (Apr 1984)] 1
3. Bid Guarantee [Adapted from FAR 52.228-1 (Sept 1996)] 2
4. Contractor Prequalification — Construction 2
5. Amendments to Invitations for Bids [Adapted from FAR 52.214-3 (Dec 1989)] 2
6. False Statements in Bids [Adapted from 52.214-4 (Apr 1984)] 3
7. Submission of Bids [Adapted from FAR 52.214-5 (Mar 1997)] 3
8. Explanation to Prospective Bidders [Adapted from FAR 52.214-6 (Apr 1984)] 3
9. Late Submissions, Modifications, and Withdrawals of Bids [Adapted from FAR 52.214-7 (Nov 1999)] 4
10. Period for Acceptance of Bids [Adapted from FAR 52.214-15 (Apr 1984)] 5
11. Preparation of Bids—Construction [Adapted from FAR 52.214-18 (Apr 1984)] 5
12. Contract Award—Sealed Bidding—Construction [Adapted from FAR 52.214-19 (Aug 1996)] 6
13. Pricing Conditions [Adapted from FAR 52.214-34 & 35 (Apr 1991)] 6
14. Site Investigation and Conditions Affecting the Work [Adapted from FAR 52.236-3 (Apr 1984)] 7
15. Flow-down of Contract Clauses 7
16. PNNL Contractor Environmental Safety and Health (CESH) Documents 8

1. NAICS Classification: 236220

NAICS is the abbreviation for “North American Industry Classification System”. NAICS was developed by the U.S., Canada, and Mexico in a joint effort to provide new comparability in statistics about business activity across North America. NAICS assigns codes to all economic activity within twenty broad sectors and is accepted and used by the Small Business Association (SBA) in determining size standards where eligibility as a small business is a factor or a consideration.

2. Commencement, Prosecution, and Completion of Work [Adapted from FAR 52.211-10 (Apr 1984)]

The Contractor shall be required to (a) commence Work under this Contract within **five (5) calendar days** after the date the Contractor receives the Notice to Proceed, (b) prosecute the Work diligently, and (c) complete the entire Work ready for use not later than 08/31/2015. It is anticipated that the successful contractor will receive the Award on or around July 31, 2015.

3. Bid Guarantee [Adapted from FAR 52.228-1 (Sept 1996)]

(a) Failure to furnish a bid guarantee in the proper form and amount, by the time set for opening of bids, may be cause for rejection of the bid.
(b) The Bidder shall furnish a bid guarantee in the form of a firm commitment, *e.g.,* bid bond supported by good and sufficient surety or sureties acceptable to Battelle, postal money order, certified check, cashier's check, or irrevocable letter of credit. Battelle will return bid guarantees, other than bid bonds—
(a) To unsuccessful Bidders as soon as practicable after the opening of bids; and
(b) To the successful Bidder upon execution of Contractual documents and bonds (including any necessary coinsurance or reinsurance agreements), as required by the bid as accepted.
(c) The amount of the bid guarantee shall be **20% percent of the bid price or $3,000,000**, whichever is less.
(d) If the successful Bidder, upon acceptance of its bid by Battelle within the period specified for acceptance, fails to execute all Contractual documents or furnish executed bond(s) within 10 days after receipt of the forms by the Bidder, Battelle may terminate the Contract for default.
(e) In the event the Contract is terminated for default, the Bidder is liable for any cost of acquiring the Work that exceeds the amount of its bid, and the bid guarantee is available to offset the difference.

4. Contractor Prequalification — Construction

(a) Contractors must meet Battelle's minimum qualification requirements to be eligible to Contract with Battelle directly as a Prime Contractor, or participate as a Subcontractor to a Prime Contractor performing Work on-site. Battelle's Prime Contractor and Subcontractor qualification requirements are posted on our Acquisition website at https://ebs.pnnl.gov. Any required supporting documents should be attached electronically and submitted with the completed Qualification Statements. Contractors will be notified by email of the acceptability of their qualifications.

(b) Bids will be solicited and accepted from pre-qualified sources ONLY.

(c) Prior to performing any awarded Contract Work on-site, each Subcontractor to the Prime Contractor must be accepted as meeting Battelle's qualification requirements.

5. Amendments to Invitations for Bids [Adapted from FAR 52.214-3 (Dec 1989)]

(a) If this solicitation is amended, then all terms and conditions which are not modified remain unchanged.

(b) Bidders shall acknowledge receipt of any amendment to this solicitation by

(1) signing and returning the amendment,

(2) identifying the amendment number and date in the space provided for this purpose on the form for submitting a bid,

(3) letter or telegram, or

(4) facsimile, if facsimile bids are authorized in the solicitation. Battelle must receive the acknowledgment by the time and at the place specified for receipt of bids.

6. False Statements in Bids [Adapted from 52.214-4 (Apr 1984)]

Bidders must provide full, accurate, and complete information as required by this solicitation and its attachments. The penalty for making false statements in bids is prescribed in 18 U.S.C. 1001.

7. Submission of Bids [Adapted from FAR 52.214-5 (Mar 1997)]

(a) Bids and bid modifications shall be submitted in sealed envelopes or packages (unless submitted by electronic means)—

(1) Addressed to the office specified in the solicitation; and

(2) Showing the time and date specified for receipt, the solicitation number, and the name and address of the Bidder.

(b) Bidders using commercial carrier services shall ensure that the bid is addressed and marked on the outermost envelope or wrapper as prescribed in paragraphs (a)(1) and (2) of this provision when delivered to the office specified in the solicitation.

(c) Telegraphic bids will not be considered unless authorized by the solicitation; however, bids may be modified or withdrawn by written or telegraphic notice.

(d) Facsimile bids, modifications, or withdrawals, will not be considered unless authorized by the solicitation.

(e) Bids submitted by electronic commerce shall be considered only if the electronic commerce method was specifically stipulated or permitted by the solicitation.

8. Explanation to Prospective Bidders [Adapted from FAR 52.214-6 (Apr 1984)]

Any prospective Bidder desiring an explanation or interpretation of the solicitation, drawings, specifications, etc., must request it in writing soon enough to allow a reply to reach all prospective Bidders before the submission of their bids. Oral explanations or instructions given before the award of a Contract will not be binding. Any information given a prospective Bidder concerning a solicitation will be furnished promptly to all other prospective Bidders as an amendment to the solicitation, if that information is necessary in submitting bids or if the lack of it would be prejudicial to other prospective Bidders.

9. Late Submissions, Modifications, and Withdrawals of Bids [Adapted from FAR 52.214-7 (Nov 1999)]

(a) Bidders are responsible for submitting bids, and any modifications or withdrawals, so as to reach the Battelle office designated in the invitation for bids (IFB) by the time specified in the IFB. If no time is specified in the IFB, the time for receipt is 10:00 a.m., local time, for the designated Battelle office on the date that bids are due.

(b)(1) Any bid, modification, or withdrawal received at the Battelle office designated in the IFB after the exact time specified for receipt of bids is “late” and will not be considered unless it is received before award is made, the Contract Specialist determines that accepting the late bid would not unduly delay the acquisition; and—

(i) If it was transmitted through an electronic commerce method authorized by the IFB, it was received at the initial point of entry to the Battelle infrastructure not later than 5:00 p.m. one Working day prior to the date specified for receipt of bids; or

(ii) There is acceptable evidence to establish that it was received at the Battelle installation designated for receipt of bids and was under Battelle’s control prior to the time set for receipt of bids.

(2) However, a late modification of an otherwise successful bid that makes its terms more favorable to Battelle will be considered at any time it is received and may be accepted.

(c) Acceptable evidence to establish the time of receipt at the Battelle installation includes the time/date stamp of that installation on the bid wrapper, other documentary evidence of receipt maintained by the installation, or oral testimony or statements of Battelle personnel.

(d) If an emergency or unanticipated event interrupts normal Battelle processes so that bids cannot be received at the Battelle office designated for receipt of bids by the exact time specified in the IFB and urgent Battelle requirements preclude amendment of the

IFB, the time specified for receipt of bids will be deemed to be extended to the same time of day specified in the solicitation on the first Work day on which normal Battelle processes resume.

(e) Bids may be withdrawn by written notice received at any time before the exact time set for receipt of bids. If the IFB authorizes facsimile bids, bids may be withdrawn via facsimile received at any time before the exact time set for receipt of bids, subject to the conditions specified in the Instruction to Bidders entitled "Facsimile Bids." A bid may be withdrawn in person by a Bidder or its authorized representative if, before the exact time set for receipt of bids, the identity of the person requesting withdrawal is established and the person signs a receipt for the bid.

10. Period for Acceptance of Bids [Adapted from FAR 52.214-15 (Apr 1984)]

In compliance with the solicitation, the Bidder agrees, if this bid is accepted within **90 calendar days** from the date specified in the solicitation for receipt of bids, to furnish any or all items upon which prices are bid at the price set opposite each item, delivered at the designated point(s), within the time specified in the Schedule.

11. Preparation of Bids—Construction [Adapted from FAR 52.214-18 (Apr 1984)]

(a) **Bids must be—**

(1) Submitted on the forms furnished by Battelle or on copies of those forms, and
(2) Manually signed. The person signing a bid must initial each erasure or change appearing on any bid form.

(b) The bid form may require Bidders to submit bid prices for one or more items on various bases, including—

(1) Lump sum bidding;
(2) Alternate prices;
(3) Units of construction; or
(4) Any combination of paragraphs (b)(1) through (b)(3) of this provision.

(c) If the solicitation requires bidding on all items, failure to do so will disqualify the bid. If bidding on all items is not required, Bidders should insert the words "no bid" in the space provided for any item on which no price is submitted.

(d) Alternate bids will not be considered unless this solicitation authorizes their submission.

(e) **Additional Proposal Requirements—**

(1) **Bid Guarantee:** *– is required.*

(2) **Representations and Certifications:** Bidder shall complete and submit company representations and certifications.
(3) **Insurance:** Bidder shall submit verification of possession of the insurance coverage listed in the General Provisions.
(4) **Permits and Licenses:** Bidder shall submit the Certificate of License number, which grants them the authority to Work as a Contractor in the State, County and/or Municipality where the Work is to be performed. If Bidder does not have such license or certificate, a copy of the application for it must be submitted with an estimate of time required to obtain it.
(5) **HSSA/Davis Bacon:** General and Subs must flow down the HSSA for this project. Provide Documentation

12. Contract Award—Sealed Bidding—Construction **[Adapted from FAR 52.214-19 (Aug 1996)]**

(a) Battelle will evaluate bids in response to this solicitation without discussions and will award a Contract to the responsible Bidder whose bid, conforming to the solicitation, will be most advantageous to Battelle, considering only price and the price-related factors specified elsewhere in the solicitation.

(b) Battelle may reject any or all bids, and waive informalities or minor irregularities in bids received.

(c) Battelle may accept any item or combination of items, unless doing so is precluded by a restrictive limitation in the solicitation or the bid.

(d) Battelle may reject a bid as non-responsive if the prices bid are materially unbalanced between line items or sub-line items. A bid is materially unbalanced when it is based on prices significantly less than cost for some Work and prices which are significantly overstated in relation to cost for other Work, and if there is a reasonable doubt that the bid will result in the lowest overall cost to Battelle even though it may be the low evaluated bid, or if it is so unbalanced as to be tantamount to allowing an advance payment.

13. Pricing Conditions **[Adapted from FAR 52.214-34 & 35 (Apr 1991)]**

(a) Offers submitted in response to this solicitation shall be in the English language. Offers received in other than English shall be rejected.

(b) Offers submitted in response to this solicitation shall be in terms of U.S. dollars. Offers received in other than U.S. dollars shall be rejected.

(c) All pricing must be firm for the duration of this Contract.

(d) The quoted price(s) must include all costs to for materials, labor, equipment, testing and any and all items of expense, fees, taxes, duties, overhead and profit for full and complete performance of the Work.

14. Site Investigation and Conditions Affecting the Work [Adapted from FAR 52.236-3 (Apr 1984)]

(a) The Contractor must take steps reasonably necessary to ascertain the nature and location of the Work, and to investigate and satisfy itself as to the general and local conditions which can affect the Work or its cost, including but not limited to—

(1) Conditions bearing upon transportation, disposal, handling, and storage of materials;
(2) The availability of labor, water, electric power, and roads;
(3) Uncertainties of weather, river stages, tides, or similar physical conditions at the site;
(4) The conformation and conditions of the ground; and
(5) The character of equipment and facilities needed preliminary to and during Work performance.

The Contractor must also satisfy itself as to the character, quality, and quantity of surface and subsurface materials or obstacles to be encountered insofar as this information is reasonably ascertainable from an inspection of the site, including all exploratory Work done by Battelle, as well as from the drawings and specifications made a part of this Contract. Any failure of the Contractor to take the actions described and acknowledged in this paragraph will not relieve the Contractor from responsibility for estimating properly the difficulty and cost of successfully performing the Work, or for proceeding to successfully perform the Work without additional expense to Battelle.

(b) Battelle assumes no responsibility for any conclusions or interpretations made by the Contractor based on the information made available by Battelle. Nor does Battelle assume responsibility for any understanding reached or representation made concerning conditions which can affect the Work by any of its officers or agents before the execution of this Contract, unless that understanding or representation is expressly stated in this Contract.

15. Flow-down of Contract Clauses

(a) Any Contract resulting from this solicitation, by and between Battelle and Contractor (including all subcontractors and suppliers), for services in connection with Battelle's Management, Operation and Maintenance of the U.S. Department of Energy's Pacific Northwest Laboratory (PNNL) at Richland, Washington, under Contract DE-AC05-76RL01830 is subject to the terms and conditions of the General Provisions set forth in

this solicitation. Contractor shall flow-down all terms and conditions in this solicitation in all its lower-tier subcontracts and supplier purchase orders. Clauses made inapplicable by the value, stated conditions, or type of Contract are self-deleting.

(b) The Contractor and its subcontractors at any tier are required to submit a fully executed SF 1413, Statement and Acknowledgment, upon award of each subcontract involving labor to acknowledge that the following clauses of the Contract have been included:

1. **Contract Work Hours and Safety Standards Act – Overtime Compensation – Construction**
2. **Davis-Bacon Act**
3. **Withholding of Funds**
4. **Payrolls and Basic Records**
5. **Apprentices and Trainees**
6. **Compliance with Copeland Act Requirements**
7. **Subcontracts (Labor Standards)**
8. **Contract Termination – Debarment**
9. **Disputes Concerning Labor Standards**
10. **Certification of Eligibility**
11. **Hanford Site Stabilization Agreement (HSSA)**

16. PNNL Contractor Environmental Safety and Health (CESH) Documents

CESH documents, including the CESH Manual, the Hoisting and Rigging Manual and miscellaneous CESH forms can be accessed online at http://www.pnnl.gov/contracts/Forms.aspx?area=Procurement.

Pacific Northwest
NATIONAL LABORATORY
Proudly Operated by **Battelle** *Since 1965*

REPRESENTATIONS AND CERTIFICATIONS

For the Pacific Northwest National Laboratory
Operated by Battelle Memorial Institute

Battelle Memorial Institute has executed and is engaged in the performance of Prime Contract DE-AC05-76RL01830 with the United States Department of Energy (DOE), for the management, operation, and maintenance of the Pacific Northwest National Laboratory (PNNL) in Richland, Washington. The following representations and certifications must be completed, and this form must be signed and returned with the Offeror's proposal.

Name and DUNS Number

Individual/Company Name _____

"Doing Business As" (DBA) _____

DUNS Number _____

Taxpayer Identification *(cl. 405 - Oct 1998)*

A. Definitions

"Common Parent," as used in this solicitation provision, means that corporation entity owns or controls an affiliated group of corporation that files its Federal income tax returns on a consolidated basis, and of which the offeror is a member.

"Taxpayer Identification Number (TIN)," as used in this provision, means the number required by the Internal Revenue Service (IRS) to be used by the offeror in reporting income tax and other returns. The TIN may be either a Social Security Number or an Employee Identification Number.

B. All offerors must submit the information required in Paragraphs D through F of this provision to comply with debt collection requirements of 31 U.S.C. 7701(c) and 3325(d), reporting requirements of 26 U.S.C. 6041, 6041A, and 6050M and implementing regulations issued by the IRS. If the resulting contract is subject to the reporting requirements described in Federal Acquisition Regulation (FAR) 4.904, the failure or refusal by the offeror to furnish the information may result in a 31 percent reduction of payments otherwise due under the contract.

C. The TIN may be used by the Government to collect and report on any delinquent amounts arising out of the offeror's relationship with the government (31 U.S.C. 7701(c)(3)). If the resulting contract is subject to the payment reporting requirements described in FAR 4.904, the TIN provided hereunder may be matched with IRS records to verify the accuracy of the offeror's TIN.

D. *Taxpayer Identification Number (TIN)*

- ☐ TIN: _____
- ☐ TIN has been applied for.
- ☐ TIN is not required because _____
- ☐ Offeror is a nonresident alien, foreign corporation, or foreign partnership that does not have income effectively connected with the conduct of trade or business in the United States and does not have an office or place of business or a fiscal paying agent in the United States.
- ☐ Offeror is an agency or instrumentality of a foreign government
- ☐ Offeror is an agency or instrumentality of a Federal Government
- ☐ Other. State basis. _____

E. *Type of Organization*

- ☐ Sole proprietorship
- ☐ Partnership
- ☐ Corporate entity (not tax-exempt)
- ☐ Corporate entity (tax-exempt)
- ☐ Government entity (Federal, State, or local)
- ☐ Foreign government
- ☐ International organization per 26 CFR 1.6049-4
- ☐ Other _____

F. *Common Parent*

- ☐ Offeror is not owned or controlled by a common parent as defined in paragraph (a) of this provision.
- ☐ Name and TIN of common parent: Name _____ TIN _____

☐ Offeror, its parent company, or subsidiaries, is/has been owned or controlled by a foreign entity. If so, provide the following information:

Name of Parent Company _____

Main Office Address _____

_____

G. *Other*

☐ Foreign organization is headquarter in _____ (country)

☐ Company ☐ is, ☐ is not publicly traded

Small Business Program Representations *(cl. 407 - Oct 2011)*

(Applicable if any performance will be inside the United States or its outlying areas.)

A. 1. The North American Industry Classification System (NAICS) code for this acquisition is 236220.

2. The small business size standard is _____.

3. The small business size standard for a concern which submits an offer in its own name, other than on a construction or service contract, but which proposes to furnish a product which it did not itself manufacture, is 500 employees.

B. *Representations.*

1. The offeror represents as part of its offer that it ☐ is, ☐ is not a small business concern.

(Complete 2-8 below, as applicable, only if the offeror represented itself as a small business concern in paragraph B.1. of this provision.)

2. The offeror represents, for general statistical purposes, that it ☐ is, ☐ is not, a small disadvantaged business concern as defined in 13 CFR 124.1002. *(If so, also complete the Small Disadvantaged Business Status representation, below.)*

3. The offeror represents as part of its offer that it ☐ is, ☐ is not a women-owned small business concern.

4. [*Complete only if the offeror represented itself as a women-owned small business concern in Paragraph B.3. of this provision.*] Women-owned small business (WOSB) concern eligible under the WOSB Program.

The offeror represents as part of its offer that—

a. It ☐ is, ☐ is not a WOSB concern eligible under the WOSB Program, has provided all the required documents to the WOSB Repository, and no change in circumstances or adverse decisions have been issued that affects its eligibility; and

b. It ☐ is, ☐ is not a joint venture that complies with the requirements of 13 CFR part 127, and the representation in Paragraph B.4.a. of this provision is accurate in reference to the WOSB concern or concerns that are participating in the joint venture. [*The offeror shall enter the name or names of the WOSB concern or concerns that are participating in the joint venture:*

_____.] *Each WOSB concern participating in the joint venture shall submit a separate signed copy of the WOSB representation.*

5. [*Complete only if the offeror represented itself as a women-owned small business concern eligible under the WOSB Program in Paragraph B.4. of this provision.*] Economically disadvantaged women-owned small business (EDWOSB) concern. The offeror represents as part of its offer that—

a. It ☐ is, ☐ is not an EDWOSB concern eligible under the WOSB Program, has provided all the required documents to the WOSB Repository, and no change in circumstances or adverse decisions have been issued that affects its eligibility; and

b. It ☐ is, ☐ is not a joint venture that complies with the requirements of 13 CFR part 127, and the representation in Paragraph B.5.a. of this provision is accurate in reference to the EDWOSB concern or concerns that are participating in the joint venture. [*The offeror shall enter the name or names of the EDWOSB concern or concerns that are participating in the joint venture:*

_____.] *Each EDWOSB concern participating in the joint venture shall submit a separate signed copy of the EDWOSB representation.*

6. The offeror represents as part of its offer that it ☐ is, ☐ is not a veteran-owned small business concern.

7. The offeror represents as part of its offer that it ☐ is, ☐ is not a service-disabled veteran-owned small business concern.

8. The offeror represents, as part of its offer, that—

   a. It ☐ is, ☐ is not a HUBZone small business concern listed, on the date of this representation, on the List of Qualified HUBZone Small Business Concerns maintained by the Small Business Administration, and no material change in ownership and control, principal office, or HUBZone employee percentage have occurred since it was in accordance with 13 CFR part 126; and

   b. It ☐ is, ☐ is not a HUBZone joint venture that complies with the requirements of 13 CFR part 126, and the representation in paragraph B.6.a. of this provision is accurate for the HUBZone small business concern that are participating in the HUBZone joint venture.

   [*The offeror shall enter the name or names of the HUBZone small business concern or concerns that are participating in the joint venture*: _____]

   Each HUBZone small business concern participating in the joint venture shall submit a separate signed copy of the HUBZone representation.

C. *Definitions*. As used in this provision ...

"Economically disadvantaged women-owned small business (EDWOSB) concern" means a small business concern that is at least 51 percent directly and unconditionally owned by, and the management and daily business operations of which are controlled by, one or more women who are citizens of the United States and who are economically disadvantaged in accordance with 13 CFR part 127. It automatically qualifies as a women-owned small business concern eligible under the WOSB Program.

"Service-disabled veteran-owned small business concern"—

1. Means a small business concern (a) Not less than 51 percent of which is owned by one or more service-disabled veterans or, in the case of any publicly owned business, not less than 51 percent of the stock of which is owned by one or more service-disabled veterans; and (b) The management and daily business operations of which are controlled by one or more service-disabled veterans or, in the case of a service-disabled veteran with permanent and severe disability, the spouse or permanent caregiver of such veteran.
2. Service-disabled veteran means a veteran, as defined in 38 U.S.C. 101(2), with a disability that is service-connected, as defined in 38 U.S.C. 101(16).

"Small business concern" means a concern, including its affiliates, that is independently owned and operated, not dominant in the field of operation in which it is bidding on Government contracts, and qualified as a small business under the criteria in 13 CFR part 121 and the size standard in Paragraph A of this provision.

"Veteran-owned small business concern" means a small business concern—

1. Not less than 51 percent of which is owned by one or more veterans (as defined at 38 U.S.C. 101(2)) or, in the case of any publicly owned business, not less than 51 percent of the stock of which is owned by one or more veterans; and
2. The management and daily business operations of which are controlled by one or more veterans.

"Women-owned small business concern" means a small business concern—

1. That is at least 51 percent owned by one or more women; or, in the case of any publicly owned business, at least 51 percent of the stock of which is owned by one or more women; and
2. Whose management and daily business operations are controlled by one or more women.

D. *Notice*.

1. If this solicitation is for supplies and has been set aside, in whole or in part, for small business concerns, then the clause in this solicitation providing notice of the set-aside contains restrictions on the source of the end items to be furnished.
2. Under 15 U.S.C. 645(d), any person who misrepresents a firm's status as a small, HUBZone small, small disadvantaged, or women-owned small business concern in order to obtain a contract to be awarded under the preference programs established pursuant to section 8(a), 8(d), 9, or 15 of the Small Business Act or any other provision of Federal law that specifically references section 8(d) for a definition of program eligibility, shall— (i) Be punished by imposition of fine, imprisonment, or both; (ii) Be subject to administrative remedies, including suspension and debarment; and (iii) Be ineligible for participation in programs conducted under the authority of the Act.

Alaska Native Corporation or Indian Tribe Representation *(cl. 407A - Feb 2011)*

In accordance with FAR 52.219-9(d)(1)(i), subcontracts awarded to an Alaska Native Corporation (ANC) or Indian tribe may be counted towards subcontracting goals for small business and small disadvantaged business concerns regardless of the size or Small Business Administration certification of the ANC or Indian tribe. As defined by FAR 52.219-9(b), the offeror represents that it –

☐ is ☐ is not an Alaska Native Corporation

☐ is ☐ is not an Indian tribe

Organizational Conflicts of Interest Disclosure—Advisory and Assistance Services *(cl. 411 - June 1997)*

A. Organizational conflict of interest means that because of other activities or relationships with other persons, a person is unable or potentially unable to render impartial assistance or advice to the Government, or the person's objectivity in performing the contract work is or might be otherwise impaired, or a person has an unfair competitive advantage.

B. An offeror notified that it is the apparent successful offeror shall provide the statement described in Paragraph C of this provision. For purposes of this provision, "apparent successful offeror" means the proposer selected for final negotiations or, where individual contracts are negotiated with all firms in the competitive range, it means all such firms.

C. The statement must contain the following:

1. A statement of any past (within the past twelve months), present, or currently planned financial, contractual, organizational, or other interests relating to the performance of the statement of work. For contractual interests, such statement must include the name, address, telephone number of the client or client(s), a description of the services rendered to the previous client(s), and the name of a responsible officer or employee of the offeror who is knowledgeable about the services rendered to each client, if, in the 12 months preceding the date of the statement, services were rendered to the Government or any other client (including a foreign government or person) respecting the same subject matter of the instant solicitation, or directly relating to such subject matter. The agency and contract number under which the services were rendered must also be included, if applicable. For financial interests, the statement must include the nature and extent of the interest and any entity or entities involved in the financial relationship. For these and any other interests enough such information must be provided to allow a meaningful evaluation of the potential effect of the interest on the performance of the statement of work.

2. A statement that no actual or potential conflict of interest or unfair competitive advantage exists with respect to the advisory and assistance services to be provided in connection with the instant contract or that any actual or potential conflict of interest or unfair competitive advantage that does or may exist with respect to the contract in question has been communicated as part of the statement required by Paragraph B of this provision.

D. Failure of the offeror to provide the required statement may result in the offeror being determined ineligible for award. Misrepresentation or failure to report any fact may result in the assessment of penalties associated with false statements or such other provisions provided for by law or regulation.

Employment Eligibility Verification *(cl. 421 - Oct 2011)*

(Applicable to proposals exceeding $3,000)

Offeror represents that—

☐ E-Verify is not applicable based on paragraph (e) of FAR 52.222-54 Employment Eligibility Verification.

☐ it is ☐ it is not currently enrolled in E-Verify.

☐ if not currently enrolled, it will enroll in E-Verify within 30 calendar days of subcontract award.

☐ it will include FAR 52.222-54 in applicable lower-tier subcontracts.

Affirmative Action Compliance *(cl. 409 - Apr 1984)*

The offeror represents that it –

☐ has developed and has on file,

☐ has not developed and does not have on file, at each establishment, affirmative action programs required by the rules and regulations of the Secretary of Labor (41 CFR 60-1 and 60-2); or

☐ has not previously had contracts subject to the written affirmative action programs requirement of the rules and regulations of the Secretary of Labor.

Compliance with Veterans' Employment Reporting Requirements *(cl. 420 - Sep 2010)*

By submission of its offer, the offeror represents that, if it is subject to the reporting requirements of 38 U.S.C. 4212(d) (*i.e.*, if it has any contract containing Federal Acquisition Regulation clause 52.222-37, Employment Reports on Veterans), it has submitted the most recent VETS-100A Report required by that clause.

Previous Contracts and Compliance Reports *(cl. 408 - Feb 1999)*

Offeror represents that it—

☐ has ☐ has not participated in a previous contract or subcontract subject the Equal Opportunity clause of this solicitation;

☐ Has ☐ has not filed all required compliance reports; and

Representations indicating submission of required compliance reports, signed by proposed subcontractors, will be obtained before subcontract awards.

Representation of Limited Rights Data and Restricted Computer Software *(cl. 415 - Dec 2007)*

A. This solicitation sets forth the Government's known delivery requirements for data (as defined in the clause at FAR 52.227-14, Rights in Data—General). Any resulting contract may also provide the Government the option to order additional data under the Additional Data Requirements clause at FAR 52.227-16, if included in the contract. Any data delivered under the resulting contract will be subject to the Rights in Data—General clause at FAR 52.227-14 included in this contract. Under the latter clause, a Contractor may withhold from delivery data that qualify as limited rights data or restricted computer software, and deliver form, fit, and function data instead. The latter clause also may be used with its Alternates II and/or III to obtain delivery of limited rights data or restricted computer software, marked with limited rights or restricted rights notices, as appropriate. In addition, use of Alternate V with this latter clause provides the Government the right to inspect such data at the Contractor's facility.

B. By completing the remainder of this paragraph, the offeror represents that it has reviewed the requirements for the delivery of technical data or computer software and states [*offeror check appropriate block*]—

☐ None of the data proposed for fulfilling the data delivery requirements qualifies as limited rights data or restricted computer software; or

☐ Data proposed for fulfilling the data delivery requirements qualify as limited rights data or restricted computer software and are identified as follows:

_____

_____

C. Any identification of limited rights data or restricted computer software in the offeror's response is not determinative of the status of the data should a contract be awarded to the offeror.

Royalty Payment Certification *(cl. 414 - Jan 1986)*

In order that the U.S. Department of Energy may be informed regarding royalty payments to be made by a contractor in connection with any acquisition, construction, or operation where the amount of the royalty payment is reflected in the contract price, or is to be reimbursed by Battelle, check one of the following:

☐ The Contract price includes no amount representing the payment of royalty by the Offeror directly to others in connection with the performance of the contract.

☐ The Contract price includes an amount for royalty payment expected to be made in connection with the proposed award set forth below:

1. the amount of each payment,
2. the names of the licensor, and
3. either the patent numbers involved or such other information as will permit identification of the patents and patent applications and the basis on which royalties will be paid.

Buy American Act Certificate *(cl. 410 - Feb 2009)*

A. The offeror certifies that each end product, except those listed in Paragraph B of this provision, is a domestic end product and that for other than COTS items, the offeror has considered components of unknown origin to have been mined, produced, or manufactured outside the United States. The offeror shall list as foreign end products those end products manufactured in the United States that do not qualify as domestic end products, *i.e.*, an end product that is not a COTS item and does not meet the component test in Paragraph 2 of the definition of "domestic end product." The terms "commercially available off-the-shelf (COTS) item," "component," "domestic end product," "end product," "foreign end product," and "United States" are defined in the clause of this solicitation entitled "Buy American Act—Supplies."

B. Foreign End Products:

Line Item No.	Country of Origin

C. Offers will be evaluated in accordance with the policies and procedures of Part 25 of the Federal Acquisition Regulation.

Export Control *(cl. 422 - July 2012)*

(Required for all proposals of Equipment, Tools, Software or Technology)

The Offeror represents that the property has an Export Control requirement that is described in either of the following regulations:

A. An International Traffic in Arms Regulations (ITAR) United States Munitions List (USML) Category

Manufacturer Name _____
Model Number _____
Description _____
USML Category # _____

B. An Export Administrations Regulations (EAR) Export Control Classification Number (ECCN);

Manufacturer Name _____
Model Number _____
Description _____
ECCN # _____ (e.g. 1A001...NOT the Harmonizing Code)

Note: Prior to the delivery of equipment, tools, software or technology, the successful contractor must provide the ECCN for each item to the PNNL Property Office at pnnl.property@pnnl.gov.

Technical Data Certification *(cl. 413 - Jan 1986)*

The offeror certifies that it has not delivered or is not obligated to deliver to Battelle or to the Government under any contract or subcontract the same or substantially the same technical data included in its offer, except as set forth below:

☐ None

☐ Contract No. (and Subcontract No., if applicable), Agency name and place of delivery

Certification Regarding Responsibility Matters *(cl. 419 - April 2010)*

A. The Offeror certifies, to the best of its knowledge and belief, that—

1. The Offeror and/or any of its Principals—

☐ are ☐ are not presently debarred, suspended, proposed for debarment, or declared ineligible for the award of contracts by any Federal agency;

☐ have ☐ have not within a three-year period preceding this offer, been convicted of or had a civil judgment rendered against them for: commission of fraud or a criminal offense in connection with obtaining, attempting to obtain, or performing a public (Federal, state, or local) contract or subcontract; violation of Federal or state antitrust statutes relating to the submission of offers; or commission of embezzlement, theft, forgery, bribery, falsification or destruction of records, making false statements, tax evasion, violating Federal criminal tax laws, or receiving stolen property;

☐ are ☐ are not presently indicted for, or otherwise criminally or civilly charged by a governmental entity with, commission of any of the offenses enumerated in Paragraph A.1.a.ii. of this provision;

☐ have ☐ have not within a three-year period preceding this offer, been notified of any delinquent Federal taxes in an amount that exceeds $3,000 for which the liability remains unsatisfied.

a. Federal taxes are considered delinquent if both of the following criteria apply:

i. *The tax liability is finally determined*. The liability is finally determined if it has been assessed. A liability is not finally determined if there is a pending administrative or judicial challenge. In the case of a judicial challenge to the liability, the liability is not finally determined until all judicial appeal rights have been exhausted.

ii. *The taxpayer is delinquent in making payment*. A taxpayer is delinquent if the taxpayer has failed to pay the tax liability when full payment was due and required. A taxpayer is not delinquent in cases where enforced collection action is precluded.

b. *Examples.*

- The taxpayer has received a statutory notice of deficiency, under I.R.C. § 6212, which entitles the taxpayer to seek Tax Court review of a proposed tax deficiency. This is not a delinquent tax because it is not a final tax liability. Should the taxpayer seek Tax Court review, this will not be a final tax liability until the taxpayer has exercised all judicial appeal rights.
- The IRS has filed a notice of Federal tax lien with respect to an assessed tax liability, and the taxpayer has been issued a notice under I.R.C. § 6320 entitling the taxpayer to request a hearing with the IRS Office of Appeals contesting the lien filing, and to further appeal to the Tax Court if the IRS determines to sustain the lien filing. In the course of the hearing, the taxpayer is entitled to contest the underlying tax liability because the taxpayer has had no prior opportunity to contest the liability. This is not a delinquent tax because it is not a final tax liability. Should the taxpayer seek tax court review, this will not be a final tax liability until the taxpayer has exercised all judicial appeal rights.
- The taxpayer has entered into an installment agreement pursuant to I.R.C. § 6159. The taxpayer is making timely payments and is in full compliance with the agreement terms. The taxpayer is not delinquent because the taxpayer is not currently required to make full payment.
- The taxpayer has filed for bankruptcy protection. The taxpayer is not delinquent because enforced collection action is stayed under 11 U.S.C. 362 (the Bankruptcy Code).

c. The Offeror ☐ has, ☐ has not, within a three-year period preceding this offer, had one or more contracts terminated for default by any Federal agency.

2. "Principal," for the purposes of this certification, means an officer, director, owner, partner, or a person having primary management or supervisory responsibilities within a business entity (*e.g.*, general manager; plant manager; head of a subsidiary, division, or business segment; and similar positions).

This Certification Concerns a Matter Within the Jurisdiction of an Agency of the United States and the Making of a False, Fictitious, or Fraudulent Certification May Render the Maker Subject to Prosecution Under Section 1001, Title 18, United States Code.

B. The Offeror shall provide immediate written notice to the Battelle Contracts Representative if, at any time prior to contract award, the Offeror learns that its certification was erroneous when submitted or has become erroneous by reason of changed circumstances.

C. A certification that any of the items in Paragraph A of this provision exists will not necessarily result in withholding of an award under this solicitation. However, the certification will be considered in connection with a determination of the Offeror's responsibility. Failure of the Offeror to furnish a certification or provide such additional information as requested by the Battelle Contracts Representative may render the Offeror nonresponsible.

D. Nothing contained in the foregoing shall be construed to require establishment of a system of records in order to render, in good faith, the certification required by Paragraph A of this provision. The knowledge and information of an Offeror is not required to exceed that which is normally possessed by a prudent person in the ordinary course of business dealings.

E. The certification in Paragraph A of this provision is a material representation of fact upon which reliance was placed when making award. If it is later determined that the Offeror knowingly rendered an erroneous certification, in addition to other remedies available to Battelle, the Battelle Contracts Representative may terminate the contract resulting from this solicitation for default.

Patent Rights Representation *(cl. 417 - Jan 1986)*

Offeror represents that it—

☐ is	☐ is not	A small business as defined at section 2 of Pub. L. 85-536 (15 USC 632) and the implementing regulations of the Administrator of the Small Business Administration, 13 CFR Part 121.
☐ is	☐ is not	An organization of the type described in section 501(c)(3) of the Internal Revenue Code (26 USC 501(c)(3)) and exempt from taxation under section 501(a) of the Internal Revenue Code (26 USC 501(a)).
☐ is	☐ is not	A nonprofit scientific or educational organization qualified under a State nonprofit organization statute.
☐ is	☐ is not	A U.S. domestic university or other U.S. institution of higher education.

Certification and Disclosure Regarding Payments to Influence Certain Federal Transactions *(cl. 404 - Sep 2007)*

(Applicable to proposals exceeding $100,000)

A. *Definitions.* As used in this provision—"Lobbying contact" has the meaning provided at 2 U.S.C. 1602(8). The terms "agency," "influencing or attempting to influence," "officer or employee of an agency," "person," "reasonable compensation," and "regularly employed" are defined in the FAR clause of this solicitation entitled "Limitation on Payments to Influence Certain Federal Transactions" (52.203-12).

B. *Prohibition.* The prohibition and exceptions contained in the FAR clause of this solicitation entitled "Limitation on Payments to Influence Certain Federal Transactions" (52.203-12) are hereby incorporated by reference in this provision.

C. *Certification*. The offeror, by signing its offer, hereby certifies to the best of its knowledge and belief that no Federal appropriated funds have been paid or will be paid to any person for influencing or attempting to influence an officer or employee of any agency, a Member of Congress, an officer or employee of Congress, or an employee of a Member of Congress on its behalf in connection with the awarding of this contract.

D. *Disclosure*. If any registrants under the Lobbying Disclosure Act of 1995 have made a lobbying contact on behalf of the offeror with respect to this contract, the offeror shall complete and submit, with its offer, OMB Standard Form LLL, Disclosure of Lobbying Activities, to provide the name of the registrants. The offeror need not report regularly employed officers or employees of the offeror to whom payments of reasonable compensation were made.

E. *Penalty*. Submission of this certification and disclosure is a prerequisite for making or entering into this contract imposed by 31 U.S.C. 1352.Any person who makes an expenditure prohibited under this provision or who fails to file or amend the disclosure required to be filed or amended by this provision, shall be subject to a civil penalty of not less than $10,000, and not more than $100,000, for each such failure.

Code of Business Ethics and Conduct *(cl. 406 - Oct 2011)*

By submission of this offer, the offeror certifies that it conducts its business fairly, impartially, and in an ethical and proper manner. The offeror also certifies that it maintains a Code of Business Ethics and Conduct and adheres to its terms. The offeror agrees, in consideration of the opportunity to propose on this requirement, that the offeror shall immediately report all unethical or improper conduct by the offeror or Buyer's agents in connection with this solicitation or the resulting contract to the U.S. Department of Energy, Office of Inspector General, and the Battelle Contracts Representative.

Cost Accounting Standards Notices and Certification *(cl. 416 - Oct 2011)*

Note: This notice does not apply to small businesses or foreign governments. This notice is in three parts, identified by Roman numerals I through III.

Offerors shall examine each part and provide the requested information in order to determine Cost Accounting Standards (CAS) requirements applicable to any resultant contract.

If the offeror is an educational institution, Part II does not apply unless the contemplated contract will be subject to full or modified CAS coverage pursuant to 48 CFR 9903.201-2(c)(5) or 9903.201-2(c)(6), respectively.

I. DISCLOSURE STATEMENT—COST ACCOUNTING PRACTICES AND CERTIFICATION

A. Any contract in excess of $700,000 resulting from this solicitation will be subject to the requirements of the Cost Accounting Standards Board (48 CFR Chapter 99), except for those contracts which are exempt as specified in 48 CFR 9903.201-1.

B. Any offeror submitting a proposal which, if accepted, will result in a contract subject to the requirements of 48 CFR Chapter 99 must, as a condition of contracting, submit a Disclosure Statement as required by 48 CFR 9903.202. When required, the Disclosure Statement must be submitted as a part of the offeror's proposal under this solicitation unless the offeror has already submitted a Disclosure Statement disclosing the practices used in connection with the pricing of this proposal. If an applicable Disclosure Statement has already been submitted, the offeror may satisfy the requirement for submission by providing the information requested in paragraph (c) of Part I of this provision.

Caution: In the absence of specific regulations or agreement, a practice disclosed in a Disclosure Statement shall not, by virtue of such disclosure, be deemed to be a proper, approved, or agreed-to practice for pricing proposals or accumulating and reporting contract performance cost data.

C. Check the appropriate box below:

☐ 1. *Certificate of Concurrent Submission of Disclosure Statement*. The offeror hereby certifies that, as a part of the offer, copies of the Disclosure Statement have been submitted as follows:

a. Original and one copy to the cognizant Administrative Contracting Officer (ACO) or cognizant Federal agency official authorized to act in that capacity (Federal official), as applicable; and

b. One copy to the cognizant Federal auditor.

(Disclosure must be on Form No. CASB DS-1 or CASB DS-2, as applicable. Forms may be obtained from the cognizant ACO or Federal official and/or from the loose-leaf version of the Federal Acquisition Regulation.)

Date of Disclosure Statement: _____

Name and Address of Cognizant ACO or Federal Official Where Filed: _____

The offeror further certifies that the practices used in estimating costs in pricing this proposal are consistent with the cost accounting practices disclosed in the Disclosure Statement.

☐ 2. *Certificate of Previously Submitted Disclosure Statement*. The offeror hereby certifies that the required Disclosure Statement was filed as follows:

Date of Disclosure Statement: _____

Name and Address of Cognizant ACO or Federal Official Where Filed: _____

The offeror further certifies that the practices used in estimating costs in pricing this proposal are consistent with the cost accounting practices disclosed in the applicable Disclosure Statement.

☐ 3. *Certificate of Monetary Exemption*. The offeror hereby certifies that the offeror, together with all divisions, subsidiaries, and affiliates under common control, did not receive net awards of negotiated prime contracts and subcontracts subject to CAS totaling $50 million or more in the cost accounting period immediately preceding the period in which this proposal was submitted. The offeror further certifies that if such status changes before an award resulting from this proposal, the offeror will advise the Contracting Officer immediately.

☐ 4. *Certificate of Interim Exemption*. The offeror hereby certifies that (i) the offeror first exceeded the monetary exemption for disclosure, as defined in (3) of this subsection, in the cost accounting period immediately preceding the period in which this offer was submitted and (ii) in accordance with 48 CFR 9903.202-1, the offeror is not yet required to submit a Disclosure Statement. The offeror further certifies that if an award resulting from this proposal has not been made within 90 days after the end of that period, the offeror will immediately submit a revised certificate to the Contracting Officer, in the form specified under Paragraph C.1. or C.2. of Part I of this provision, as appropriate, to verify submission of a completed Disclosure Statement.

☐ 5. *Certificate of Disclosure Statement Due Date by Educational Institution.* If the offeror is an educational institution that, under the transition provisions of 48 CFR 9903.202-1(f), is or will be required to submit a Disclosure Statement after receipt of this award, the offeror hereby certifies that (check one and complete):

☐ A Disclosure Statement Filing Due Date of _____ has been established with the cognizant Federal agency.

☐ The Disclosure Statement will be submitted within the 6-month period ending _____ months after receipt of this award.

Caution: Offerors currently required to disclose because they were awarded a CAS-covered prime contract or subcontract of $50 million or more in the current cost accounting period may not claim this exemption (4). Further, the exemption applies only in connection with proposals submitted before expiration of the 90-day period following the cost accounting period in which the monetary exemption was exceeded.

II. COST ACCOUNTING STANDARDS—ELIGIBILITY FOR MODIFIED CONTRACT COVERAGE

If the offeror is eligible to use the modified provisions of 48 CFR 9903.201-2(b) and elects to do so, the offeror shall indicate by checking the box below. Checking the box below shall mean that the resultant contract is subject to the Disclosure and Consistency of Cost Accounting Practices clause in lieu of the Cost Accounting Standards clause.

☐ The offeror hereby claims an exemption from the Cost Accounting Standards clause under the provisions of 48 CFR 9903.201-2(b) and certifies that the offeror is eligible for use of the Disclosure and Consistency of Cost Accounting Practices clause because during the cost accounting period immediately preceding the period in which this proposal was submitted, the offeror received less than $50 million in awards of CAS-covered prime contracts and subcontracts. The offeror further certifies that if such status changes before an award resulting from this proposal, the offeror will advise the Contracting Officer immediately.

Caution: An offeror may not claim the above eligibility for modified contract coverage if this proposal is expected to result in the award of a CAS-covered contract of $50 million or more or if, during its current cost accounting period, the offeror has been awarded a single CAS-covered prime contract or subcontract of $50 million or more.

III. ADDITIONAL COST ACCOUNTING STANDARDS APPLICABLE TO EXISTING CONTRACTS

The offeror shall indicate below whether award of the contemplated contract would, in accordance with Paragraph A.3. of the Cost Accounting Standards clause, require a change in established cost accounting practices affecting existing contracts and subcontracts.

☐ Yes ☐ No

SIGNATURE

Note: A person authorized to make legally binding commitments on behalf of the offeror must sign below. Signature constitutes a representation that reasonable and prudent inquiry has been made to ascertain the true and accurate basis of all statements. Statements which a person knows or has reason to know are false, fictitious, or fraudulent may result in criminal or civil penalties, as prescribed in 18 USC 1001 and 31 USC 3802(a)(2). These Representations and Certifications shall remain in effect for a period of one (1) year from the date signed and shall satisfy any subsequent proposal requirements during that one-year period. The Offeror shall notify Battelle of any changes that occur in any of the representation or certifications during that period.

Authorized Signature _____

Signer's Name (Printed) _____

Title _____

Date _____

Pacific Northwest NATIONAL LABORATORY
Proudly Operated by Battelle Since 1965

Part I – Schedule
IFB 305227 Section A - Contract Form

Solicitation, Offer and Award	Invitation For Bid Number: 305227	Date Issued: 07/10/2015	1 of 11

1. Description:

EMSL Fall Protection Install

2. NAICS Code: 236220

3. Contract / Modification Number:

4. This Solicitation has been set aside for Small Business Concerns: YES ☒ NO ☐

5. Solicitation Method:

☒ **Invitation for Bid (IFB) - *(Sealed Bid)***
☐ **Request for Proposal (RFP) - *(Negotiated)***

6. Type of Contract:

☒ **Fixed Price** ☐ **Labor-Hour / Time-and-Material** ☐ **Cost Reimbursable** ☐ **Indefinite Quantity**

(a) SOLICITATION

Sealed offers for furnishing the supplies or services in the Schedule will be received at the place specified in box 7, or if hand-carried, delivered to the contact person in box 9 until 2:00 p.m. local time. In sealed bid solicitations "offer" and "offeror" mean "bid" and "bidder." All offers are subject to the terms and conditions in this solicitation.

7. Address Offer to:

Battelle Memorial Institute, Pacific Northwest Division
902 Battelle Boulevard
Attn: Mail Stop: J2-05
Richland, Washington 99352

8. Offer Due Date:

07/23/2015, 1:00 PM PDT

9. For Information Call:
Garrett Hyatt
Office Phone: 509-371-7591
E-Mail Address: garrett.hyatt@pnnl.gov

10. TABLE OF CONTENTS

Invitation for Bid *(self-deletes upon award)*

Instructions to Bidders *(self-deletes upon award)*

Part I – The Schedule

☒	**Section A**	(A) Contract Form (and Rate Sheets)
☒	**Sections B - H**	(B) Supplies or Services, (C) Description of the Work, (D) Packaging and Marking, (E) Inspection and Acceptance, (F) Deliveries or Performance, (G) Contract Administration Data, (H) Special Contract Requirements

Part II – Contract Clauses

☒	**Section I**	Contract Clauses

Part III - List of Documents, Exhibits and Attachments

☒	**Section J**	Attachments & **Representations and Certifications**

(b) OFFER *(Completed by Offeror)*

Period for Acceptance of Offers. In compliance with the above, the undersigned agrees, if this offer is accepted within 90 **calendar days** from the date of receipt of offers specified above, to furnish any or all items upon which prices are offered at the price set opposite each item, delivered at the designated point(s), within the time specified.

11. Acknowledgement of Amendments
The Offeror acknowledges receipt of Solicitation Amendment Numbers:

1	2	3	4	5	6	7	8	9	10
☐	☐	☐	☐	☐	☐	☐	☐	☐	☐

12. Company Name and Address:

13. Name and Title of Person Authorized to Sign Offer:

Name: _____

Title: _____

14. Offer Amount: YES ☐ NO ☐
Bid Summary Attached

Bid Price: $

15. Authorized Signature of the Offeror:

16. Offer Date:

(c) AWARD *(Completed by Battelle)*

17. Contract Price:	18. Contract Number:	19. Contract Term:	20. Award Date:
$		Through 08/31/2015	

21. Battelle Authorization: Your offer is hereby accepted as to the items listed above. This award consummates the contract which consists of the following documents: (a) the Battelle Solicitation, (b) your offer, and (c) this award/contract. No further contractual document is necessary.

Garrett V. Hyatt

(Name of Sr. Contracts Professional) ***(Signature Authorizing Award)*** ***(Date)***

B. SERVICES AND PRICES/COST

1. **LUMP SUM BID:** The following Contract Line Item Numbers (CLIN's) shall be individually priced within the Contractor's Lump Sum Price:

CLIN 1: EMSL Fall Protection Installation

2. BASIS OF AWARD: Award shall be made on the basis of the bottom line, lump sum, lowest priced responsive bid from a responsible pre-qualified contractor, for CLIN 1.

C. DESCRIPTION OF THE WORK

1. **GENERAL.** Contractor shall perform all construction services, and provide all material, means and methods, equipment, tools and labor, necessary to complete the Work described in and reasonably inferable from the Contract Documents. The Work generally includes providing labor, materials, equipment, means and methods to complete the project.

2. **SPECIFIC.** The Work includes but is not limited to the specific scope elements listed in the Div. 1, Statement of Work and the drawings.

3. **SEQUENCING**: Work Sequencing and Interim Completion Milestones of identified portions of the Work shall be in accordance with the "Work Sequence" requirements of Division 1.

D. PACKAGING AND MARKING

(Reserved)

E. INSPECTION AND ACCEPTANCE

Battelle has the right to inspect and evaluate the Work performed or being performed under the Contract, and the premises where the Work is being performed, at all reasonable times and in a manner that will not unduly delay the Work. If Battelle performs inspection or evaluation on the premises of the Contractor or a Subcontractor, the Contractor shall furnish and shall require Subcontractors to furnish all reasonable facilities and assistance for the safe and convenient performance of these duties.

F. PERIOD OF PERFORMANCE

1. **DATE OF COMMENCEMENT.** The Work shall commence within **five (5)** calendar days of Contractor's receipt of Notice to Proceed (NTP) unless the parties mutually agree otherwise in writing.

2. **CONTRACT COMPLETION.**

(a) Work Sequencing/Interim Milestones. Work Sequencing, Interim Milestones and/or Substantial Completion of identified portions of the Work shall be in accordance with the "Work Sequence" requirements of Division 1.
(b) Final Completion. The Contractor shall complete the entire Work ready for use not later than 0***8/31/2015***.

3. **TIME IS OF THE ESSENCE.** Battelle and Contractor mutually agree that time is of the essence with respect to the dates and times set forth in the Contract Documents.

G. CONTRACT ADMINISTRATION

1. **GENERAL.** The Contractor is solely responsible for strict compliance with all requirements of this Contract. No notice, communication or representation in any form or from any person other than a Battelle Contracts Representative shall be effective to relieve the Contractor of such obligation or to stop Battelle from enforcing the Contract exactly according to its written terms.

2. **CONTRACT AUTHORITY.** Contracting authority in Battelle is by formal delegation to named individuals. Contract authority for this Work has been delegated to:

Name: **Garrett Hyatt**
Title: **Sr. Contract Specialist**
Phone: **509-371-7591**
Cell Phone: **509-420-3051**
Email: **garrett.hyatt@pnnl.gov**

Notwithstanding any of the other provisions of the Contract, a named and authorized Battelle Contract Representative shall be the only individual on behalf of Battelle authorized to accept nonconforming Work; waive any requirement of this Contract; or take any action involving a change in the scope, price, terms, or conditions of this Contract.

3. **INTERPRETATION AND INTENT.** The Contract Documents are intended to permit the parties to complete the Work and all obligations required by the Contract Documents within the Contract Time(s) for the Contract Price. The Contract Documents are intended to be complementary and interpreted in harmony so as to avoid conflict, with words and phrases interpreted in a manner consistent with construction and design industry standards. In the event of any inconsistency, conflict, or ambiguity between or among the Contract Documents, the order of precedence shall be in accordance with the General Provisions.

The Contract Documents form the entire agreement between Battelle and Contractor and by incorporation herein are as fully binding on the parties as if repeated herein. No oral representations or other agreements have been made by the parties except as specifically stated in the Contract Documents.

4. **INVOICING AND PAYMENT**. Submit invoices electronically to ap.invoices@pnnl.gov. Invoices may not be submitted more frequently than monthly. Payments can be made electronically by wire (foreign payments) or ACH (domestic payments) by filling out the ACH form at http://www.pnnl.gov/contracts/contractdocuments.aspx. Failure to comply with electronic processing may result in a delay in payment. Payments Terms are Net 30 from the date received.

5. **TECHNICAL DIRECTION.** The Contractor's progress and compliance with the technical requirements of this Contract will be monitored for Battelle by a Technical Oversight Representative (TOR). The TOR is authorized to receive information, conduct inspections of Work in process and witness Contractor tests. He/she has no authority to: change or waive any provision of this Contract, including but not limited to Statements of Work, drawings, specifications and standards, whether attached or incorporated by reference; provide interpretations of any provision or requirement of this Contract; direct, advise, or recommend any particular course of conduct on the part of the Contractor; or create any legally binding commitment on behalf of Battelle. The TOR for this Work will be:

Name: **Dan Ryan**
Title: **Project Manager**
Phone: **509-371-7995**
Email: **dan.ryan@pnnl.gov**

H. SPECIAL REQUIREMENTS

1. BID GUARANTEE [*Adapted from FAR 52.228-1 (Sept 1996)*]

(a) Failure to furnish a bid guarantee in the proper form and amount, by the time set for opening of bids, may be cause for rejection of the bid.

(b) The bidder shall furnish a bid guarantee in the form of a firm commitment, e.g., bid bond supported by good and sufficient surety or sureties acceptable to Battelle, postal money order, certified check, cashier's check, or irrevocable letter of credit. Battelle will return bid guarantees, other than bid bonds—

(1) To unsuccessful bidders as soon as practicable after the opening of bids; and
(2) To the successful bidder upon execution of Contractual documents and bonds (including any necessary coinsurance or reinsurance agreements), as required by the bid as accepted.

(c) The amount of the bid guarantee shall be 20% percent of the bid price or **$3,000,000, whichever is less.**

(d) If the successful bidder, upon acceptance of its bid by Battelle within the period specified for acceptance, fails to execute all Contractual documents or furnish executed bond(s) within 10 days after receipt of the forms by the bidder, Battelle may terminate the Contract for default.

(e) In the event the Contract is terminated for default, the bidder is liable for any cost of acquiring the Work that exceeds the amount of its bid, and the bid guarantee is available to offset the difference.

2. CONTRACTOR PREQUALIFICATION

(a) Contractors must meet Battelle's minimum qualification requirements to be eligible to Contract with Battelle directly as a Prime Contractor, or participate as a Subcontractor to a Prime Contractor performing Work on-site. Battelle's Prime Contractor and Subcontractor qualification requirements are posted on our Acquisition website at https://ebs.pnnl.gov/. Any required supporting documents should be attached electronically and submitted with the completed Qualification Statements. Contractors will be notified by email of the acceptability of their qualifications.

(b) Bids will be accepted from pre-qualified Contractors ONLY.

(c) Prior to any Subcontractor(s) performing Work on-site as a lower tier to a Contractor having a Contract with Battelle, the Subcontractor(s) must also be accepted as meeting Battelle's qualification requirements.

3. IMPLEMENTATION OF THE HANFORD SITE STABILIZATION AGREEMENT

(a) The Hanford Site Stabilization Agreement (HSSA) for all construction work for the U. S. Department of Energy (DOE) at the Hanford Site, which is referenced in this Clause, consists of a Basic Agreement dated September 10, 1984, plus Appendix A, both of which may be periodically amended. The HSSA is hereby incorporated into this Contract by reference. The Contractor is responsible for obtaining the most current text from DOE.

(b) This Clause applies to employees performing work under Contracts (or subcontracts) administered by DOE which are subject to the *Davis-Bacon Act*, in the classifications set forth in the HSSA for work performed at the Hanford Site.

(c) Contractors and subcontractors at all tiers who are parties to an agreement(s) for construction work with a Local Union having jurisdiction over DOE construction work performed at the Hanford Site, or who are parties to a national labor agreement for such construction work, shall become signatory to the HSSA and shall abide by all of its provisions, including its Appendix A. Subcontractors at all tiers who have subcontracts with a signatory Contractor or subcontractor shall become signatory to the HSSA and shall abide by all of its provisions, including its Appendix A.

(d) Contractors and subcontractors at all tiers who are not signatory to the HSSA and who are not required under paragraph (c) above to become signatory to the HSSA, shall pay not less and no more than the wages, fringe benefits, and other employee compensation set forth in Appendix A thereto and shall adhere, except as otherwise directed by the Contracting Officer, to the following provisions of the Agreement:

(1) Article VII Employment (Section 2 only);
(2) Article XII Non-Signatory Contractor Requirements;
(3) Article XIII Hours of Work, Shifts, and Overtime;
(4) Article XIV Holidays;
(5) Article XV Wage Scales and Fringe Benefits (Sections 1 and 2 only);
(6) Article XVII Payment of Wages-Checking In and Out (Section 3 only);
(7) Article XX General Working Conditions; and
(8) Article XXI Safety and Health.
(e) The Contractor agrees to make no contributions in connection with this Contract to Industry Promotion Funds, or similar funds, except with the prior approval of the Contracting Officer.

(f) The obligation of the Contractor and its subcontractors to pay fringe benefits shall be discharged by making payments required by this Contract in accordance with the provisions of the amendments to the *Davis-Bacon Act* contained in the Act of July 2, 1964 (Public Law 88-349-78 Statutes 238-239), and U.S. Department of Labor regulations in implementation thereof (Code of Federal Regulations Title 29 Parts 1 and 5).

(g) The Contracting Officer may direct the Contractor to pay amounts for wages, fringe benefits, and other employee compensation if the HSSA, including its Appendix A, is modified by the involved parties.

(h) In the event of failure to comply with paragraphs (c) (d) (e) (f) and (g), or failure to perform any of the obligations imposed upon the Contractor and its subcontractors hereunder, the Contracting Officer may withhold any payments due to the Contractor and may terminate the Contract for default.

(i) The rights and remedies of the Government provided in this Clause shall not be exclusive and are in addition to any other rights and remedies of the Government provided by law or under this Contract.

(j) The requirements of this Clause are in addition to, and shall not relieve the Contractor of, any obligation imposed by other Clauses of this Contract, including Section I Clauses entitled, *FAR 52.222-4, Contract Work Hours and Safety Standards Act—Overtime Compensation, FAR 52.222-6, Davis-Bacon Act, FAR 52.222-7, Withholding of Funds,*

FAR 52.222-8, Payrolls and Basic Records, FAR 52.222-10, Compliance with Copeland Act Requirements, and *FAR 52.222-12, Contract Termination – Debarment.*

(k) The Contractor agrees to maintain its bid or proposal records showing rates and amounts used for computing wages and other compensation, and its payroll and personnel records during the course of work subject to this Clause, and to preserve such records for a period of three (3) years thereafter, for all employees performing such work. Such records will contain the name and address of each such employee, his/her correct classification, rate of pay, daily and weekly number of hours worked, and dates and hours of the day within which work was performed, deductions made, and amounts for wages and other compensation covered by paragraphs (c) (d) (e) (f) and (g) hereof. The Contractor agrees to make these records available for inspection by the Contracting Officer and will permit him/her to interview employees during working hours on the job.

(l) The Contractor agrees to insert the provisions of this Clause including this paragraph

(k) In all subcontracts for the performance of work subject to the *Davis-Bacon Act*.

A copy of the *Hanford Site Stabilization Agreement* is located at: http://www.hanford.gov

The U.S. Department of Labor wage determinations for the *Davis-Bacon Act* and *Service Contract Act* are located at: http://www.wdol.gov

4. ENVIRONMENT, SAFETY, AND HEALTH REQUIREMENTS – PNNL F&O SPONSORED WORK SITES (JPP/WEA/JSA) (cl. 3113b – Nov 2013)

A. In performing any work under this contract on property or facilities owned or controlled by Battelle that are identified as PNNL Work Sites (hereinafter "onsite"), the Contractor shall comply with all applicable federal, state and local environment, safety, and health laws and regulations. The Contractor shall also comply with 10 CFR 851, DOE Worker Safety and Health Program, and DEAR 970.5223-1, Integration of Environment, Safety and Health (ES&H) into Work Planning and Execution (Dec. 2000). In order to comply with the requirements of 10 CFR 851 and DEAR 970.5223-1, the Contractor shall be guided by the principles set forth below.

B. The Contractor shall perform work safely and in a manner that ensures adequate protection for employees, the public, and the environment, and shall be accountable for the safe performance of work. The Contractor shall exercise a degree of care commensurate with the work and the associated hazards. The Contractor shall ensure that management of ES&H functions and activities becomes an integral but visible part of the Contractor's work planning and execution processes. The Contractor shall, in the performance of work, ensure that—

1. Line management is responsible for the protection of employees, public, and the environment. Line management includes those contractor and subcontractor employees managing and supervising employees performing work.

2. Clear and unambiguous lines of authority and responsibility for ensuring (ES&H) are established and maintained at all organizational levels.

3. Personnel possess the experience, knowledge, skills, and abilities that are necessary to discharge their responsibilities, and shall retain records respecting such competency and qualifications, making them available upon request.

4. Resources are effectively allocated to address ES&H, programmatic, and operational considerations. Protecting employees, the public, and the environment is a priority whenever activities are planned and performed.

5. Before work is performed, the associated hazards are evaluated and a set of ES&H standards and requirements are established which, if properly implemented, provide adequate assurance that employees, the public, and the environment are protected from adverse consequences.

6. Administrative and engineering controls to prevent and mitigate hazards are tailored to the work being performed and associated hazards. Emphasis should be on designing the work and/or controls to reduce or eliminate the hazards and to prevent accidents and unplanned releases and exposures.

C. The Contractor, relative to the Statement of Work and contract specifications, shall be able to demonstrate through documentation and work practices that its performance of work under this contract—

1. Fulfilled the scope of work as outlined in this contract

2. Identified and analyzed specific, task-level hazards associated with the work

3. Developed and implemented hazard controls related to the hazards

4. Allowed the performance of work within the controls

5. Provided feedback to Battelle and Contractor employees on adequacy of hazard controls

D. The Contractor shall perform work in accordance with a DOE-approved Worker Safety and Health Program (also referred to in the DEAR as a Safety Management Plan) as described below:

1. The Contractor shall demonstrate well-established safety protocols applicable to the scope of work and consistent with the required elements stated in this clause. Prior to the initiation of any onsite work, the Contractor shall either—

a. Accept and incorporate Battelle's PNNL Contractor Environment Safety and Health (CES&H) Manual as its own. The Battelle Contracts Representative can provide a hard copy of the manual upon request. In those cases where the Contractor's onsite activities are limited to an office or meeting environment, with no additional or unusual hazards, the CES&H Manual requirements can be met through review of the Visitor Orientation Pamphlet. Both the CES&H Manual and the Visitor Orientation Pamphlet are available on-line at http://www.pnnl.gov/contracts/Forms.aspx?area=Procurement.

b. Submit its own 10 CFR 851 and DEAR 970.5223-1 compliant Worker Safety and Health Program (WSHP) document to the Battelle Contracts Representative. The Battelle Contracts Representative will coordinate the

review and approval of the program document by DOE. The Contractor will be notified by the Battelle Contracts Representative of the program document's approval by DOE. Acceptance of the Contractor's program document will be at the sole discretion of DOE.

2. The Contractor will be provided a completed Job Planning Package (JPP) and Workplace Exposure Assessment (WEA) in the Invitation for Bid (IFB) or Request for Proposal (RFP). The completed JPP and WEA, which are a part of this contract, incorporate elements of effective job planning and hazard identification. Elements include identifying: the scope of work to be performed; facility operating requirements; potential hazards to Battelle and Contractor staff, the public and environment created by the work performed; hazard control methods and mitigation; and mechanisms to evaluate the adequacy of those controls. The JPP and WEA are key control processes in the safe conduct of work at Battelle. The Contractor is expected to develop their work sequence and job safety analysis (JSA) including information provided within the JPP and WEA in order to access Battelle property or facilities and initiate work.

E. The Contractor shall perform the following additional hazard identification tasks consistent with an approved WSHP:

1. The Contractor shall be responsible for identifying all potential occupational exposures that its employees and the employees of its lower-tier subcontractors will be exposed to while performing any work under this contract.

2. The Contractor shall assure that its employees and those of any lower-tiered subcontractor are medically qualified to perform work associated with any potential occupational exposures that have been identified. Medical qualification and medical surveillance programs are the sole responsibility of the Contractor. In addition, the Contractor is responsible for maintaining any records associated with the administration of these programs.

3. For each of its employees and each of its lower-tier subcontract employees that the Contractor has identified as having potential occupational exposures that require enrollment in a medical surveillance or medical qualification program, the Contractor shall provide its Occupational Medical provider with the following information:

a. Current information about actual or potential work-related site hazards (chemical, radiological, physical, biological, or ergonomic);

b. Employee job-task and hazard analysis information, including essential job functions;

c. Actual or potential work-site exposures of each employee; and

d. Personnel actions resulting in a change of job functions such that a change of hazards, or exposures results.

4. For each of its employees and each of its lower-tier subcontract employees, a copy of the exposure information provided to the Contractor's occupational medical provider shall be submitted to the Battelle Contracts Representative and

approved by Battelle before any of these employees begin work under this contract.

F. The Contractor shall notify the Battelle Contracts Representative immediately of any OSHA-recordable injuries/illnesses, any "off-normal occurrences," or Government property damaged, that the Contractor determines to have occurred in the course of operations onsite and shall furnish such further information as the Battelle Contracts Representative may require. An "off-normal occurrence" is any unplanned or unexpected event, including near misses, or the discovery of a deficiency in a procedure, plan, or system that has real or potentially undesirable consequences to personnel, equipment, facilities, the environment, and/or programs.

G. The Contractor's onsite ES&H activities will be subject to review by the Technical Oversight Representative of this contract. Other representatives of Battelle may conduct periodic inspections of the Contractor's equipment, work and storage areas for compliance with the applicable ES&H requirements. The Battelle Contracts Representative will notify the Contractor by a written Notice of Non-compliance of any observed non-compliance with applicable ES&H requirements. The Contractor shall immediately take appropriate corrective action. The Contractor shall advise the Battelle Contracts Representative, in writing, within five (5) working days of the corrective action taken on any safety non-compliance noted on the written Notice of Non-compliance. If the Contractor fails or refuses to correct the safety non-compliance, Battelle may perform, or cause to be performed, the necessary corrective work and unilaterally charge the Contractor for the cost thereof. Such charges will be deducted from payments otherwise due the Contractor under this contract.

H. The Contractor shall promptly evaluate and resolve any non-compliance with applicable ES&H requirements. If the Contractor fails to provide resolution or if, at any time, the Contractor's acts or failure to act causes substantial harm or an imminent danger to the environment, or health and safety of employees or the public, the Battelle Contracts Representative may issue an order stopping work in whole or in part and the Contractor shall be liable for the delay and any costs thereby incurred. Any stop-work order issued by Battelle under this clause (or issued by the Contractor to a subcontractor in accordance with this clause) shall be without prejudice to any other legal or contractual rights of Battelle. In the event that the Battelle Contracts Representative issues a stop-work order, an order authorizing the resumption of the work may be issued at the discretion of the Battelle Contracts Representative. The Contractor shall not be entitled to an extension of time, or additional cost or fee, or damages by reason of, or in connection with, any work stoppage ordered in accordance with this clause.

I. Employee Concerns Program

1. The Contractor, its agents, employees or subcontractors, are entitled to use the Battelle Employee Concerns Program and Hotline (509) 375-3999. The Hotline operates 24 hours per day, 7 days a week. Messages may be left anonymously, and all concerns are handled with confidentiality to the maximum extent possible. Employee concerns may also be submitted in writing to the Battelle Employee Concerns Office, Battelle, Pacific Northwest National Laboratory, P.O. Box 999, K1-42, Richland, Washington, 99352, or in person at

the Staff Concerns Office, Battelle's Research Operation Building during normal business hours, Monday through Friday 7:30 a.m. to 4:30 p.m.

2. For the purpose of this document, allegations, concerns, and complaints are handled in a like manner and are referred to collectively as "employee concerns." A concern can consist of a declaration, statement, or assertion of impropriety or inadequacy on the part of one's employer or others at a DOE Site that has affected (or threatens to affect) aspects of operations, such as the environment, health, safety, quality, or security, and may include fraud, mismanagement, waste, or abuse of authority.

3. No retaliation or retribution shall be taken toward any individual as a result of filing an employee concern consistent with 10 CFR 708.

J. Civil Penalties and Indemnification

1. The 2002 Bob Stump National Defense Authorization Act amended the Atomic Energy Act by adding section 234C "Worker Health and Safety Rules for Department of Energy Nuclear Facilities." It required DOE to promulgate a worker safety and health rule, published in the Federal Register on February 9, 2006, as 10 CFR 851. It establishes worker safety and health requirements that govern the conduct of contractor activities at both nuclear and non-nuclear DOE Sites. Contractors that fail to comply with the Rule are subject to civil penalties or contract penalties.

2. The Contractor assumes full responsibility and shall indemnify, hold harmless, and defend Battelle, its directors, officers, and employees from any civil or contractual liability under section 234C of the Atomic Energy Act of 1954, as amended, or the implementing regulations, arising out of the activities of the Contractor, its subcontractors, suppliers, agents, employees, and their officers, or directors. The Contractor's obligation to indemnify and hold harmless shall expressly include attorney fees and other reasonable costs of defending any action or proceeding instituted under section 234C or DOE's implementing regulations.

K. The Contractor is responsible for its subcontractors' compliance with the ES&H requirements of this contract. The Contractor shall include a clause substantially the same as this clause in lower-tier subcontracts involving work at on property or facilities owned or controlled by Battelle that are identified as PNNL Work Sites. Such subcontracts shall provide for the right to stop work under the conditions described herein.

****** END OF SECTION *******

GENERAL PROVISIONS

Fixed Price Construction Contracts

For the Pacific Northwest National Laboratory
Operated by Battelle Memorial Institute

Battelle Memorial Institute has executed and is engaged in the performance of Prime Contract DE-AC05-76RL01830 with the United States Department of Energy (DOE), for the management, operation, and maintenance of the Pacific Northwest National Laboratory (PNNL) in Richland, Washington. This contract is entered into in furtherance of the performance of the work provided in the Prime Contract, and is subject to the following general provisions:

GENERAL ____ 3
1. Introduction ____ 3
2. Definitions ____ 3
3. Acceptance of Contract Terms and Conditions (cl 302 – October 2008) ____ 3
4. Order of Precedence - Construction ____ 3
5. Assignment (cl 357 - Jan 2003) ____ 3
6. Pacific Northwest National Laboratory or Battelle Name (cl 374 – October 2008) ____ 3
7. Insurance - Construction ____ 3
8. Labor Harmony ____ 4
9. Registration, Representations & Certifications ____ 4
10. Limitations on Subcontracting (FAR 52.219-14, Nov 2011) ____ 5
11. Performance and Payment Bonds—Construction (FAR 52.228-15, Oct 2010) ____ 5
12. Federal, State, and Local Taxes (FAR 52.229-3, Apr 2003) ____ 6
13. Payments – Construction ____ 6
14. Suspension of Work (FAR 52.242-14, Apr 1984) ____ 7
15. Stop-Work Order (FAR 52.242-15, Aug 1989) ____ 8
16. Changes (FAR 52.243-4, June 2007) ____ 8
17. Pricing of Adjustments - Construction ____ 9
18. Termination for Convenience of the Government (Fixed-Price) (FAR 52.249-2, May 2004) ____ 9
19. Default (Fixed-Price Construction) (FAR 52.249-10, Apr 1984) ____ 11
20. Failure to Perform - Construction ____ 12
21. Excusable Delays (FAR 52.249-14, Apr 1984) ____ 12
22. Disputes (FAR 52.233-1, July 2002) ____ 12
23. Indemnity (cl. 351C – Aug 2009) ____ 13
24. Public Release of Information ____ 13
25. Rights to Proposal Data ____ 13
26. Bankruptcy (cl. 318 - Nov 2008) ____ 13
MATERIAL REQUIREMENTS AND QUANTITIES ____ 13
27. Material Requirements (FAR 52.211-5, Aug 2000) ____ 13
28. Brand Name or Equal (FAR 52.211-6, Aug 1999) ____ 14
29. Variation in Estimated Quantity (FAR 52.211-18, Apr 1984) ____ 14
ENVIRONMENTAL SAFETY AND HEALTH ____ 14
30. Environment, Safety, and Health Requirements - Offsite (cl. 3113e – May 2012) ____ 14
31. Environment, Safety, and Health Requirements (10 CFR 851) ____ 14
32. Notifications and Investigations ____ 14
33. Solid Waste Management ____ 15
34. Waste Reduction Program (FAR 52.223-12, May 2011) ____ 15
35. Accident Prevention (FAR 52.236-13 Nov 1991) ____ 15
36. Sustainable Acquisition Requirements (cl. 381 – March 2012) ____ 16
QUALITY ASSURANCE ____ 16
37. Quality Assurance ____ 16
38. Suspect / Counterfeit Items ____ 16

39. Contractor Inspection Requirements (FAR 52.246-1, Apr 1984) 17
40. Inspection of Construction (FAR 52.246-12, Aug 1996) 17
41. Responsibility for Supplies (FAR 52.246-16, Apr 1984) 17
42. Warranty of Construction (FAR 52.246-21, Mar 1994) 18
CONSTRUCTION 18
43. Site Access Control 18
44. Prohibited Articles 20
45. Work Limitations, Restrictions & Requirements 20
46. Performance of Work by the Contractor (FAR 52.236-1, Apr 1984) 22
47. Differing Site Conditions (FAR 52.236-2, Apr 1984) 22
48. Site Investigation and Conditions Affecting the Work (FAR 52.236-3, Apr 1984) 22
49. Physical Data (FAR 52.236-4, Apr 1984) 22
50. Material and Workmanship (FAR 52.236-5, Apr 1984) 22
51. Superintendence by the Contractor (FAR 52.236-6, Apr 1984) 23
52. Permits and Responsibilities (FAR 52.236-7, Nov 1991) 23
53. Other Contracts (FAR 52.236-8, Apr 1984) 23
54. Protection of Existing Vegetation, Structures, Equipment, Utilities, and Improvements (FAR 52.236-9, Apr 1984) 23
55. Operations and Storage Areas (FAR 52.236-10, Apr 1984) 23
56. Use and Possession Prior to Completion (FAR 52.236-11, Apr 1984) 23
57. Cleaning Up (FAR 52.236-12Apr 1984) 24
58. Availability and Use of Utility Services (FAR 52.236-14, Apr 1984) 24
59. Schedules for Construction Contracts (FAR 52.236-15, Apr 1984) 24
60. Layout of Work (FAR 52.236-17, Apr 1984) 24
61. Organization and Direction of the Work (FAR 52.236-19, Apr 1984) 24
62. Specifications and Drawings for Construction (FAR 52.236-21, Feb 1997) 24
63. Back-Charges 25
64. Vendor Data Requirements 26
65. Cooperation with Others 26
LABOR STANDARDS 26
66. Davis-Bacon Act (FAR 52.222-6, July 2005) 26
67. Withholding of Funds (FAR 52.222-7, Feb 1988) 28
68. Payrolls and Basic Records (FAR 52.222-8, June 2010) 28
69. Apprentices and Trainees (FAR 52.222-9, July 2005) 29
70. Compliance with Copeland Act Requirements (FAR 52.222-10, Feb 1988) 30
71. Subcontracts (Labor Standards) (FAR 52.222-11, July 2005) 30
72. Contract Termination—Debarment (FAR 52.222-12, Feb 1988) 30
73. Compliance with Davis-Bacon and Related Act Regulations (FAR 52.222-13, Feb 1988) 31
74. Disputes Concerning Labor Standards (FAR 52.222-14, Feb 1988) 31
75. Notice of Labor Disputes (cl. 359 - Feb 1997) 31
76. Certification of Eligibility (FAR 52.222-15, Feb 1988) 31
CLAUSES INCORPORATED BY REFERENCE 31

GENERAL

1. Introduction

A. The construction covered by this Contract shall be furnished subject to the terms and conditions set forth herein.

B. This Contract is the complete and exclusive statement of the terms of the agreement between Contractor and Battelle.

C. No modification of this Contract (including any addition, deletion, or other modification proposed in Contractor's acceptance) shall be binding on Battelle unless agreed to by an authorized Battelle Contracts representative in writing.

D. If any of the clauses included or incorporated into these General Provisions do not apply to the Contract Work, such clauses are considered to be self-deleting.

2. Definitions

As used throughout this Contract, the following terms shall have the meaning set forth below:

A. "Battelle" means Battelle Memorial Institute, in the performance of its prime Contract with The United States of America and includes any duly authorized representative thereof acting within authorized limits.

B. "Contracting Officer" means the Battelle Contracts Representative.

C. "Contractor" means the entity under Contract with Battelle responsible for execution of all construction work described within the Contract documents.

D. "Construction worksite," "Site of the work," and "Site" are equivalent terms for purpose of this Contract and have the meaning given in 10 CFR 851 for Construction worksite as follows:

E. "Construction worksite is the area within the limits necessary to perform the work described in the construction procurement or authorization document. It includes the facility being constructed or renovated along with all necessary staging and storage areas, as well as adjacent areas subject to project hazards."

F. "DOE" means U. S. Department of Energy or any duly authorized representative thereof.

G. "DEAR" means Department of Energy Acquisition Regulation, including all amendments and changes thereto in effect on the date of issuance of this Contract.

H. "FAR" means Federal Acquisition Regulation, including all amendments and changes thereto in effect on the date of issuance of this Contract.

I. "Government" means The United States of America, and shall include Battelle to the extent necessary to enable Battelle to administer this Contract and to perform its obligations under its Government prime Contract.

J. "Subcontract(s)" and "Subcontractor(s)" includes this Contract when used in a FAR or DEAR clause referring to a prime and Subcontractor relationship. Otherwise, it means Contractor's lower tier Subcontract(s) and Subcontractor(s), respectively. The term "Subcontract" includes purchase orders and changes, modifications, or amendments to Subcontracts and purchase orders.

3. Acceptance of Contract Terms and Conditions (cl 302 – October 2008)

The Contractor, by signing this Contract or performing the services and/or delivering the supplies identified herein, agrees to comply with all the terms and conditions and all specifications and other documents that this Contract incorporates by reference or attachment. Battelle hereby objects to any terms and conditions contained in any acknowledgment of this Contract that are different from or in addition to those mentioned in this document. Failure of Battelle to enforce any of the provisions of this Contract shall not be construed as evidence to interpret the requirements of this Contract, nor a waiver of any requirements, nor of the right of Battelle to enforce each and every provision. All rights and obligations shall survive final performance of this Contract.

4. Order of Precedence - Construction

Any inconsistency in this solicitation or Contract shall be resolved by giving precedence in the following order:

A. Contract Agreement (excluding specifications)

B. Representations and other instructions

C. General Provisions

D. Division 1 Administrative Requirements

E. Specifications

F. Drawings

5. Assignment (cl 357 - Jan 2003)

Battelle may assign this Contract to the U.S. Department of Energy (DOE) or a designee of DOE. Upon receipt by the Contractor of written notice that DOE or its designee has been assigned this Contract, Battelle shall be relieved of all responsibility hereunder, and the Contractor shall thereafter look solely to the assignee for performance of Battelle's obligations. The Contractor shall not assign this Contract or any interest therein, nor claims thereunder without the prior written consent of Battelle or Battelle's assignee. Any assignment, by operation of law or otherwise, without prior written consent of Battelle or Battelle's assignee shall be void.

6. Pacific Northwest National Laboratory or Battelle Name (cl 374 – October 2008)

The Contractor agrees not to use Pacific Northwest National Laboratory's or Battelle's name or identifying characteristics for advertising, sales promotion, raising of capital, recommending investments or other publicity purposes that implies endorsement by the Pacific Northwest National Laboratory or Battelle without the prior written consent of Battelle. This clause shall survive the termination or expiration of this contract.

7. Insurance - Construction

A. The Contractor shall, at its sole cost, obtain and maintain in force for the duration of the Contract (including the Guarantee period) insurance of the following types, with limits not less than those set forth below.

B. ***Schedule of Minimum Insurance Types and Amounts***.

1. Workers Compensation Insurance shall be at a minimum as indicated below or per the statutory limits of the State where the work is to be performed, whichever is higher:

   (i) $1,000,000 Minimum per accident;

   (ii) $1,000,000 minimum per employee for bodily injury and disease.

2. General Liability Insurance:

   (i) $2,000,000 general aggregate limit;

   (ii) $1,000,000 per occurrence for bodily injury and property damage;

   (iii) $1,000,000 per occurrence for personal and advertising injury liability;

   (iv) $1,000,000 per occurrence for products / completed operations liability. The products / completed operations liability insurance shall be maintained in full force and effect for not less than three years following completion of Contractor's services.

3. Vehicle Liability Insurance:

   $1,000,000 combined single limit of liability for bodily injury and property damage per occurrence, covering the use of all owned, non-owned, and hired automobiles.

4. Tools and Equipment Insurance (Equipment Floater Insurance)

   Contractor shall carry and maintain Tools and Equipment Insurance during performance of its services under the Contract, covering physical damage to or loss of all major tools and equipment, construction office trailers, and their contents, and vehicles for which Contractor is responsible.

5. Builders Risk Insurance:

   Contractor shall carry and maintain Builder's Risk Insurance covering loss or damage to materials and equipment furnished by Contractor that is incorporated into the completed facility. Contractor shall be responsible for the payment of the applicable deductible (which will not exceed $5,000 per occurrence) for each loss to such materials or equipment which are in the care, custody and control of the Contractor.

C. ***Proof of Insurance***. Before commencing work, the Contractor shall furnish written proof to Battelle that the required insurance has been obtained. The policies evidencing the required insurance shall contain an endorsement to the effect that any cancellation or material change affecting Government or Battelle's interests shall not be effective for such period as the laws of the State in which this Contract is to be performed specify or until 30 days after the insurer or the Contractor gives written notice to Battelle, whichever period is longer.

D. ***Subcontractor's Commercial General Liability Insurance and Vehicle Liability Insurance***. The Contractor shall insert the substance of this clause, including this paragraph, in Subcontracts under this Contract that require work on either a Battelle or Government installation, and shall require Subcontractors to provide and maintain the kinds and minimum amounts of insurance required in the Schedule. The Contractor shall maintain a copy of all Subcontractors' proofs of required insurance, and shall make copies available to Battelle upon request.

E. ***Waiver of Subrogation***. The Contractor hereby releases the Government and Battelle, including their directors and employees, and shall cause Contractor's Insurers to waive their rights of subrogation against such released parties, for losses or claims for bodily injury, property damage or other insured claims arising out of Contractor's performance under the Contract.

F. ***Claims***. In the event that claims in excess of the insured amounts provided are filed by reason of any operations under the services provided by the Contractor, the amount of excess of such claims, or any portion thereof, may be withheld from payment due until such time as the Contractor shall furnish such additional security covering such claims as may be determined by Battelle.

8. Labor Harmony

A. Battelle maintains a neutral position regarding Project Labor Agreements. This Contract Work does not mandate nor preclude participation in a Project Labor Agreement if said participation promotes the economy and efficiency in Federal procurement ascribed by Executive Order titled, "Use of Project Labor Agreements for Federal Construction Projects," dated 2/6/09.

B. In accordance with applicable prior labor agreements, laws, regulations, codes and standards, the Contractor shall furnish labor that can work in harmony with all other elements of labor employed or to be employed on the work. Without limiting the generality of the foregoing, Labor Harmony shall include the provision of labor that will not cause, cause to be threatened or give rise to either directly or indirectly, any work disruption, slowdowns or stoppages by employees of other Contractors, while performing any work or activities incidental thereto.

C. Award of any construction Contract is contingent upon the Contractor having an acceptable Plan for harmonizing labor on the Battelle Work site.

D. The Contractor agrees to insert the substance of this clause, including paragraph (c), in every Subcontract issued in performance of this Contract.

9. Registration, Representations & Certifications

A. All Contractors shall be registered in the governments Central Contractor Registration (CCR) database. Offerors and Contractors may obtain information on registration and annual confirmation requirements via the internet at http://www.ccr.gov or by calling 1-888-227-2423, or 269-961-5757.

   1. By submission of an offer, the offeror acknowledges the requirement to be registered in the CCR database prior to award, during performance, and through final payment of any Contract, basic agreement, basic ordering agreement, or blanket purchasing agreement

resulting from this solicitation.

2. Failure to register shall be grounds for rejection of Contractor bids and proposals.

B. The Contractor is responsible for the accuracy and completeness of the data within the CCR database, and for any liability resulting from Battelle's reliance on inaccurate or incomplete data. To remain registered in the CCR database after the initial registration, the Contractor is required to review and update on an annual basis from the date of initial registration or subsequent updates its information in the CCR database to ensure it is current, accurate and complete. Updating information in the CCR does not alter the terms and conditions of this Contract and is not a substitute for a properly executed Contractual document.

C. In addition to registering in CCR, the offeror must also complete an annual representations and certifications electronically via the Online Representations and Certifications Application (ORCA) website at http://orca.bpn.gov. The Contractor is required to review and verify prior to submission of any offer that the representations and certifications currently posted electronically have been entered or updated within the last 12 months, and are current, accurate, complete, and applicable to this solicitation (including the business size standard applicable to the North American Industry Classification Code [NAICS] referenced for this solicitation), as of the date of this offer.

10. Limitations on Subcontracting (FAR 52.219-14, Nov 2011)

A. This clause does not apply to the unrestricted portion of a partial set-aside.

B. *Applicability*. This clause applies only to—

1. Contracts that have been set aside or reserved for small business concerns or 8(a) concerns;

2. Part or parts of a multiple-award contract that have been set aside for small business concerns or 8(a) concerns; and

3. Orders set aside for small business or 8(a) concerns under multiple-award contracts as described in 8.405-5 and 16.505(b)(2)(i)(F).

C. By submission of an offer and execution of a contract, the Offeror/Contractor agrees that in performance of the contract in the case of a contract for—

1. Services (except construction). At least 50 percent of the cost of contract performance incurred for personnel shall be expended for employees of the concern.

2. Supplies (other than procurement from a non-manufacturer of such supplies). The concern shall perform work for at least 50 percent of the cost of manufacturing the supplies, not including the cost of materials.

3. General construction. The concern will perform at least 15 percent of the cost of the contract, not including the cost of materials, with its own employees.

4. Construction by special trade contractors. The concern will perform at least 25 percent of the cost of the contract, not including the cost of materials, with its own employees.

11. Performance and Payment Bonds—Construction (FAR 52.228-15, Oct 2010)

A. *Definitions*. As used in this clause—

"Original contract price" means the award price of the contract; or, for requirements contracts, the price payable for the estimated total quantity; or, for indefinite-quantity contracts, the price payable for the specified minimum quantity. Original contract price does not include the price of any options, except those options exercised at the time of contract award.

B. *Amount of required bonds*. Unless the resulting contract price is $150,000 or less, the successful offeror shall furnish performance and payment bonds to the Contracting Officer as follows:

1. Performance bonds (Standard Form 25). The penal amount of performance bonds at the time of contract award shall be 100 percent of the original contract price.

2. Payment Bonds (Standard Form 25A). The penal amount of payment bonds at the time of contract award shall be 100 percent of the original contract price.

3. Additional bond protection.

(i) The Government may require additional performance and payment bond protection if the contract price is increased. The increase in protection generally will equal 100 percent of the increase in contract price.

(ii) The Government may secure the additional protection by directing the Contractor to increase the penal amount of the existing bond or to obtain an additional bond.

C. *Furnishing executed bonds*. The Contractor shall furnish all executed bonds, including any necessary reinsurance agreements, to the Contracting Officer, within the time period specified in the Bid Guarantee provision of the solicitation, or otherwise specified by the Contracting Officer, but in any event, before starting work.

D. *Surety or other security for bonds*. The bonds shall be in the form of firm commitment, supported by corporate sureties whose names appear on the list contained in Treasury Department Circular 570, individual sureties, or by other acceptable security such as postal money order, certified check, cashier's check, irrevocable letter of credit, or, in accordance with Treasury Department regulations, certain bonds or notes of the United States. Treasury Circular 570 is published in the *Federal Register* or may be obtained from the:

U.S. Department of the Treasury
Financial Management Service
Surety Bond Branch
3700 East West Highway, Room 6F01
Hyattsville, MD 20782.
Or via the internet at
http://www.fms.treas.gov/c570/.

E. *Notice of subcontractor waiver of protection (40 U.S.C. 3133(c))*. Any waiver of the right to sue on the payment bond is void unless it is in writing, signed by the person whose right is waived, and executed after such person has first furnished labor or material for use in the performance of the contract.

12. Federal, State, and Local Taxes (FAR 52.229-3, Apr 2003)

A. As used in this clause—

"After-imposed Federal tax" means any new or increased Federal excise tax or duty, or tax that was exempted or excluded on the contract date, but whose exemption was later revoked or reduced during the contract period on the transactions or property covered by this contract that the Contractor is required to pay or bear as the result of legislative, judicial, or administrative action taking effect after the contract date. It does not include social security tax or other employment taxes.

"After-relieved Federal tax" means any amount of Federal excise tax or duty, except social security or other employment taxes, that would otherwise have been payable on the transactions or property covered by this contract, but which the Contractor is not required to pay or bear, or for which the Contractor obtains a refund or drawback, as the result of legislative, judicial, or administrative action taking effect after the contract date.

"All applicable Federal, State, and local taxes and duties" means all taxes and duties, in effect on the contract date, that the taxing authority is imposing and collecting on the transactions or property covered by this contract.

"Contract date" means the date set for bid opening or, if this is a negotiated contract or a modification, the effective date of this contract or modification.

"Local taxes" includes taxes imposed by a possession or territory of the United States, Puerto Rico, or the Northern Mariana Islands, if the contract is performed wholly or partly in any of those areas.

B. The contract price includes all applicable Federal, State, and local taxes and duties.

C. The contract price shall be increased by the amount of any after-imposed Federal tax, provided the Contractor warrants in writing that no amount for such newly imposed Federal excise tax or duty or rate increase was included in the contract price, as a contingency reserve or otherwise.

D. The contract price shall be decreased by the amount of any after-relieved Federal tax.

E. The contract price shall be decreased by the amount of any Federal excise tax or duty, except social security or other employment taxes, that the Contractor is required to pay or bear, or does not obtain a refund of, through the Contractor's fault, negligence, or failure to follow instructions of the Contracting Officer.

F. No adjustment shall be made in the contract price under this clause unless the amount of the adjustment exceeds $250.

G. The Contractor shall promptly notify the Contracting Officer of all matters relating to any Federal excise tax or duty that reasonably may be expected to result in either an increase or decrease in the contract price and shall take appropriate action as the Contracting Officer directs.

H. The Government shall, without liability, furnish evidence appropriate to establish exemption from any Federal, State, or local tax when the Contractor requests such evidence and a reasonable basis exists to sustain the exemption.

13. Payments – Construction

A. ***Payment of Price.*** Battelle shall pay the Contractor the Contract price as provided in this Contract. Unless otherwise provided in the Contract Schedule, the terms of payment shall be thirty (30) days after receipt of the Contractor's properly submitted invoice.

B. ***Progress Payments***. Battelle shall make progress payments monthly as the work proceeds based on estimates of work accomplished which meets the standards of quality established under the Contract, as approved by Battelle.

1. The Contractor shall furnish a breakdown of the total Contract price showing the amount included therein for each principal category of the work, consistent with the "Schedule of Values", which shall substantiate the payment amount requested in order to provide a basis for determining progress payments, in such detail as requested by Battelle.

2. In the preparation of estimates Battelle may authorize material delivered on the site and preparatory work done to be taken into consideration. Material delivered to the Contractor at locations other than the site will not be approved for progress payments.

3. As part of the request for payment, the Contractor shall submit a report summarizing the month's injuries, illnesses, property damage, fires, "near misses", etc. The summary report should be formatted to include the following items:

   (i) Average number of employees during the month,

   (ii) Total Contractor hours worked on this Contract,

   (iii) Number of sub-tier Contractors,

   (iv) Number of sub-tier Contractor employees by sub-tier Contractor, and

   (v) Total sub-tier Contractor hours (by sub-tier Contractor) worked on this Contract.

4. Submit an electronic invoice in an acceptable format to Battelle at: ap.invoices@pnnl.gov. The electronic invoice shall be integrated with the Contract scheduling requirements and tied to the Contract schedule of values. If electronic transmittal is not possible, submit the invoice and all supporting documentation via mail to:

   Battelle, Pacific Northwest Division
   ATTN: ACCOUNTS PAYABLE
   PO Box 999, MSIN: J1-04
   Richland, WA 99352

C. ***Contractor Certification.*** Along with each request for progress payments, the Contractor shall furnish the following certification, or payment shall not be made:

I hereby certify, to the best of my knowledge and belief, that:

1. The amounts requested are only for performance in accordance with the specifications, terms, and conditions of the Contract;
2. Payments to Subcontractors and suppliers have been made from previous payments received under the Contract, and timely payments will be made from the proceeds of the payment covered by this certification, in accordance with sub-Contract agreements; and
3. This request for progress payments does not include any amounts that the Contractor intends to withhold or retain from a Subcontractor or supplier in accordance with the terms and conditions of the sub-Contract.

D. ***Refund of unearned amounts.*** If the Contractor, after making a certified request for progress payments, discovers that a portion or all of such request constitutes a payment for performance by the Contractor that fails to conform to the specifications, terms, and conditions of this Contract (hereinafter referred to as the "unearned amount"), the Contractor shall:

1. Notify Battelle of such performance deficiency; and
2. Be obligated to pay Battelle an amount (computed by Battelle in the manner provided in 31 U.S.C. 3903 (c) (1)) equal to interest on the unearned amount from the date of receipt of the unearned amount until:

   (i) The date the Contractor notifies Battelle that the performance deficiency has been corrected; or

   (ii) The date the Contractor reduces the amount of any subsequent certified request for progress payments by an amount equal to the unearned amount.

E. ***Retainage.*** In making progress payments, there shall be retained 10 percent of the estimated amount until final completion and acceptance of the Contract work. However, if Battelle finds that satisfactory progress was achieved during any period for which a progress payment is to be made, Battelle may authorize a reduction in retention. When the work is substantially complete, Battelle shall retain from previously withheld funds and future progress payments that amount it considers adequate for protection of Battelle and the Government and shall release to the Contractor all the remaining withheld funds. Also, on completion and acceptance of each separate building, public work, or other division of the Contract, for which the price is stated separately in the Contract, payment shall be made for the completed work without retention of a percentage.

F. ***Title, liability, and reservation of rights.*** All material and work covered by progress payments made shall, at the time of payment, become the sole property of Battelle, but this shall not be construed as:

1. Relieving the Contractor from the sole responsibility for all material and work upon which payments have been made or the restoration of any damaged work; or
2. Waiving the right of Battelle to require the fulfillment of all of the terms of the Contract.

G. ***Reimbursement for bond premiums***. If performance or payment bonds are required under this Contract, Battelle shall pay to the Contractor that portion of the Contract price equal to the total premiums paid by the Contractor to obtain bonds. This payment shall be paid at one time to the Contractor together with the first progress payment otherwise due after the Contractor has:

1. furnished the bonds;
2. furnished evidence of full payment to the surety; and
3. submitted a request for such payment. Payments for bond premiums shall not be made as increments of individual progress payments. The retainage provisions in paragraph (e) of this clause shall not apply to that portion of a progress payment attributable to bond premiums.

H. ***Final payment.*** Upon completion and acceptance of all work, the amount due the Contractor under this Contract shall be paid upon the presentation of a properly executed invoice and after the Contractor shall have furnished Battelle with a release of all claims against Battelle and the Government arising by virtue of this Contract, other than claims in stated amounts that the Contractor has specifically excepted from the operation of the release.

I. ***Limitation because of undefinitized work.*** Notwithstanding any provision of this Contract, progress payments shall not exceed 80 percent on work accomplished on undefinitized Contract actions. A “Contract action” is any action resulting in a Contract, as defined in FAR Subpart 2.1.

14. Suspension of Work (FAR 52.242-14, Apr 1984)

A. The Contracting Officer may order the Contractor, in writing, to suspend, delay, or interrupt all or any part of the work of this contract for the period of time that the Contracting Officer determines appropriate for the convenience of the Government.

B. If the performance of all or any part of the work is, for an unreasonable period of time, suspended, delayed, or interrupted (1) by an act of the Contracting Officer in the administration of this contract, or (2) by the Contracting Officer’s failure to act within the time specified in this contract (or within a reasonable time if not specified), an adjustment shall be made for any increase in the cost of performance of this contract (excluding profit) necessarily caused by the unreasonable suspension, delay, or interruption, and the contract modified in writing accordingly. However, no adjustment shall be made under this clause for any suspension, delay, or interruption to the extent that performance would have been so suspended, delayed, or interrupted by any other cause, including the fault or negligence of

the Contractor, or for which an equitable adjustment is provided for or excluded under any other term or condition of this contract.

C. A claim under this clause shall not be allowed—

1. For any costs incurred more than 20 days before the Contractor shall have notified the Contracting Officer in writing of the act or failure to act involved (but this requirement shall not apply as to a claim resulting from a suspension order); and

2. Unless the claim, in an amount stated, is asserted in writing as soon as practicable after the termination of the suspension, delay, or interruption, but not later than the date of final payment under the contract.

15. Stop-Work Order (FAR 52.242-15, Aug 1989)

A. The Contracting Officer may, at any time, by written order to the Contractor, require the Contractor to stop all, or any part, of the work called for by this contract for a period of 90 days after the order is delivered to the Contractor, and for any further period to which the parties may agree. The order shall be specifically identified as a stop-work order issued under this clause. Upon receipt of the order, the Contractor shall immediately comply with its terms and take all reasonable steps to minimize the incurrence of costs allocable to the work covered by the order during the period of work stoppage. Within a period of 90 days after a stop-work is delivered to the Contractor, or within any extension of that period to which the parties shall have agreed, the Contracting Officer shall either—

1. Cancel the stop-work order; or

2. Terminate the work covered by the order as provided in the Default, or the Termination for Convenience of the Government, clause of this contract.

B. If a stop-work order issued under this clause is canceled or the period of the order or any extension thereof expires, the Contractor shall resume work. The Contracting Officer shall make an equitable adjustment in the delivery schedule or contract price, or both, and the contract shall be modified, in writing, accordingly, if—

1. The stop-work order results in an increase in the time required for, or in the Contractor's cost properly allocable to, the performance of any part of this contract; and

2. The Contractor asserts its right to the adjustment within 30 days after the end of the period of work stoppage; provided that, if the Contracting Officer decides the facts justify the action, the Contracting Officer may receive and act upon the claim submitted at any time before final payment under this contract.

C. If a stop-work order is not canceled and the work covered by the order is terminated for the convenience of the Government, the Contracting Officer shall allow reasonable costs resulting from the stop-work order in arriving at the termination settlement.

D. If a stop-work order is not canceled and the work covered by the order is terminated for default, the Contracting Officer shall allow, by equitable adjustment or otherwise, reasonable costs resulting from the stop-work order.

16. Changes (FAR 52.243-4, June 2007)

A. The Contracting Officer may, at any time, without notice to the sureties, if any, by written order designated or indicated to be a change order, make changes in the work within the general scope of the contract, including changes—

1. In the specifications (including drawings and designs);

2. In the method or manner of performance of the work;

3. In the Government-furnished property or services; or

4. Directing acceleration in the performance of the work.

B. Any other written or oral order (which, as used in this paragraph (b), includes direction, instruction, interpretation, or determination) from the Contracting Officer that causes a change shall be treated as a change order under this clause; Provided, that the Contractor gives the Contracting Officer written notice stating—

1. The date, circumstances, and source of the order; and

2. That the Contractor regards the order as a change order.

C. Except as provided in this clause, no order, statement, or conduct of the Contracting Officer shall be treated as a change under this clause or entitle the Contractor to an equitable adjustment.

D. If any change under this clause causes an increase or decrease in the Contractor's cost of, or the time required for, the performance of any part of the work under this contract, whether or not changed by any such order, the Contracting Officer shall make an equitable adjustment and modify the contract in writing. However, except for an adjustment based on defective specifications, no adjustment for any change under paragraph (b) of this clause shall be made for any costs incurred more than 20 days before the Contractor gives written notice as required. In the case of defective specifications for which the Government is responsible, the equitable adjustment shall include any increased cost reasonably incurred by the Contractor in attempting to comply with the defective specifications.

E. The Contractor must assert its right to an adjustment under this clause within 30 days after (1) receipt of a written change order under paragraph (a) of this clause or (2) the furnishing of a written notice under paragraph (b) of this clause, by submitting to the Contracting Officer a written statement describing the general nature and amount of the proposal, unless this period is extended by the Government. The statement of proposal for adjustment may be included in the notice under paragraph (b) of this clause.

F. No proposal by the Contractor for an equitable

adjustment shall be allowed if asserted after final payment under this contract.

17. Pricing of Adjustments - Construction

A. ***General***. When costs are a factor in any determination of a Contract price adjustment pursuant to the "Changes" clause or any other provision of this Contract, such costs shall be in accordance with the Contract cost principles and procedures, in Subpart 31 of the FAR, as supplemented or modified by DEAR Part 931 in effect on the Effective Date of the Contract, except as otherwise provided in this Contract with respect to facilities capital cost of money (CAS 414).

B. ***Requests for Equitable Adjustment***. Contractor shall submit any request for equitable adjustment pursuant the Changes clause within 10 working days after receipt of a notice of a change. The request for equitable adjustment shall include a detailed estimate with supporting calculations and pricing for the change together with any required adjustments in the schedule.

C. ***Net Cost of Change***. For adjustments that either increase or decrease the amount of the Contract Price, the application of markups for overhead and profit shall be on the net change in direct costs for the performance of the changed work.

D. ***Allowable Markups***. Allowable markup percentages on changes will not exceed the following:

1. **Changes < $100,000**. Work performing Contractor's actual overhead rate as established by audit within the last 12 months, not-to-exceed 15 percent on total direct costs, plus a negotiated allowance for profit, not-to-exceed 10 percent;

2. **Changes > $100,000**. Work performing Contractor's actual overhead rate as established by audit within the last 12 months, not-to-exceed 10% on total direct costs, plus a negotiated allowance for profit using the DEAR weighted guideline method, not to exceed 5 percent;

3. **Markups on Lower Tiers**. No more than three mark-ups, one overhead, one profit/fee applied by the Work performing Contractor, and one commission or markup inclusive of overhead and profit by the General Contractor not-to-exceed 10 percent will be allowed regardless of the number of tiers of Subcontractors or the Subcontract instrument (i.e., purchase order, Contract, etc.).

E. ***Premium Adjustments***. Costs of premium adjustments, consequent upon changes ordered, for Payment and Performance Bonds are allowable for the prime Contractor only.

F. ***Consumables***. Consumables shall not be considered on a percentage of cost bases.

G. ***Small Tools***. Consideration for Small tools is allowable at a rate *not to exceed* 3 percent of net labor cost regardless of Contractor assertions of actual cost or independent audit determinations.

H. ***Safety***. Additional costs for safety must be supported as an actual cost necessary for performance of the changed work and will not be allowed as a percentage of net labor costs.

I. ***Equipment***. Rates for rental of Contractor or Subcontractor owned equipment shall be fair and equitable. Actual cost data shall be used when such data can be determined for both ownership and operating costs for each piece of equipment or groups of similar equipment from the Contractor's accounting records. When such costs cannot be so determined, the "Rental Rate Blue Book for Construction Equipment" published by Dataquest, Inc. will be utilized for Contractor equipment in operation or on standby, provided such rental rate is reviewed by Battelle to ensure factors included within the rental rate exclude unallowable or unacceptable costs in accordance with FAR 31.105.

18. Termination for Convenience of the Government (Fixed-Price) (FAR 52.249-2, May 2004)

A. The Government may terminate performance of work under this contract in whole or, from time to time, in part if the Contracting Officer determines that a termination is in the Government's interest. The Contracting Officer shall terminate by delivering to the Contractor a Notice of Termination specifying the extent of termination and the effective date.

B. After receipt of a Notice of Termination, and except as directed by the Contracting Officer, the Contractor shall immediately proceed with the following obligations, regardless of any delay in determining or adjusting any amounts due under this clause:

1. Stop work as specified in the notice.

2. Place no further subcontracts or orders (referred to as subcontracts in this clause) for materials, services, or facilities, except as necessary to complete the continued portion of the contract.

3. Terminate all subcontracts to the extent they relate to the work terminated.

4. Assign to the Government, as directed by the Contracting Officer, all right, title, and interest of the Contractor under the subcontracts terminated, in which case the Government shall have the right to settle or to pay any termination settlement proposal arising out of those terminations.

5. With approval or ratification to the extent required by the Contracting Officer, settle all outstanding liabilities and termination settlement proposals arising from the termination of subcontracts; the approval or ratification will be final for purposes of this clause.

6. As directed by the Contracting Officer, transfer title and deliver to the Government—

   (i) The fabricated or un-fabricated parts, work in process, completed work, supplies, and other material produced or acquired for the work terminated; and

   (ii) The completed or partially completed plans, drawings, information, and other property that, if the contract had been completed, would be required to be furnished to the Government.

7. Complete performance of the work not terminated.

8. Take any action that may be necessary, or that the Contracting Officer may direct, for the protection and preservation of the property related to this contract that is in the possession of the Contractor and in which the Government has or may acquire an interest.

9. Use its best efforts to sell, as directed or authorized by the Contracting Officer, any property of the types referred to in paragraph (b)(6) of this clause; provided, however, that the Contractor (i) is not required to extend credit to any purchaser and (ii) may acquire the property under the conditions prescribed by, and at prices approved by, the Contracting Officer. The proceeds of any transfer or disposition will be applied to reduce any payments to be made by the Government under this contract, credited to the price or cost of the work, or paid in any other manner directed by the Contracting Officer.

C. The Contractor shall submit complete termination inventory schedules no later than 120 days from the effective date of termination, unless extended in writing by the Contracting Officer upon written request of the Contractor within this 120-day period.

D. After expiration of the plant clearance period as defined in Subpart 49.001 of the Federal Acquisition Regulation, the Contractor may submit to the Contracting Officer a list, certified as to quantity and quality, of termination inventory not previously disposed of, excluding items authorized for disposition by the Contracting Officer. The Contractor may request the Government to remove those items or enter into an agreement for their storage. Within 15 days, the Government will accept title to those items and remove them or enter into a storage agreement. The Contracting Officer may verify the list upon removal of the items, or if stored, within 45 days from submission of the list, and shall correct the list, as necessary, before final settlement.

E. After termination, the Contractor shall submit a final termination settlement proposal to the Contracting Officer in the form and with the certification prescribed by the Contracting Officer. The Contractor shall submit the proposal promptly, but no later than 1 year from the effective date of termination, unless extended in writing by the Contracting Officer upon written request of the Contractor within this 1-year period. However, if the Contracting Officer determines that the facts justify it, a termination settlement proposal may be received and acted on after 1 year or any extension. If the Contractor fails to submit the proposal within the time allowed, the Contracting Officer may determine, on the basis of information available, the amount, if any, due the Contractor because of the termination and shall pay the amount determined.

F. Subject to paragraph (e) of this clause, the Contractor and the Contracting Officer may agree upon the whole or any part of the amount to be paid or remaining to be paid because of the termination. The amount may include a reasonable allowance for profit on work done. However, the agreed amount, whether under this paragraph (f) or paragraph (g) of this clause, exclusive of costs shown in paragraph (g)(3) of this clause, may not exceed the total contract price as reduced by (1) the amount of payments previously made and (2) the contract price of work not terminated. The contract shall be modified, and the Contractor paid the agreed amount. Paragraph (g) of this clause shall not limit, restrict, or affect the amount that may be agreed upon to be paid under this paragraph.

G. If the Contractor and Contracting Officer fail to agree on the whole amount to be paid the Contractor because of the termination of work, the Contracting Officer shall pay the Contractor the amounts determined as follows, but without duplication of any amounts agreed upon under paragraph (f) of this clause:

1. For contract work performed before the effective date of termination, the total (without duplication of any items) of—

   (i) The cost of this work;

   (ii) The cost of settling and paying termination settlement proposals under terminated subcontracts that are properly chargeable to the terminated portion of the contract if not included in subdivision (g)(1)(i) of this clause; and

   (iii) A sum, as profit on subdivision (g)(1)(i) of this clause, determined by the Contracting Officer under 49.202 of the Federal Acquisition Regulation, in effect on the date of this contract, to be fair and reasonable; however, if it appears that the Contractor would have sustained a loss on the entire contract had it been completed, the Contracting Officer shall allow no profit under this subdivision (g)(1)(iii) and shall reduce the settlement to reflect the indicated rate of loss.

2. The reasonable costs of settlement of the work terminated, including—

   (i) Accounting, legal, clerical, and other expenses reasonably necessary for the preparation of termination settlement proposals and supporting data;

   (ii) The termination and settlement of subcontracts (excluding the amounts of such settlements); and

   (iii) Storage, transportation, and other costs incurred, reasonably necessary for the preservation, protection, or disposition of the termination inventory.

H. Except for normal spoilage, and except to the extent that the Government expressly assumed the risk of loss, the Contracting Officer shall exclude from the amounts payable to the Contractor under paragraph (g) of this clause, the fair value, as determined by the Contracting Officer, of property that is destroyed, lost, stolen, or damaged so as to become undeliverable to the Government or to a buyer.

I. The cost principles and procedures of Part 31 of the Federal Acquisition Regulation, in effect on the date of this contract, shall govern all costs claimed, agreed to, or determined under this clause.

J. The Contractor shall have the right of appeal, under the Disputes clause, from any determination made by the Contracting Officer under paragraph (e), (g), or

(l) of this clause, except that if the Contractor failed to submit the termination settlement proposal or request for equitable adjustment within the time provided in paragraph (e) or (l), respectively, and failed to request a time extension, there is no right of appeal.

K. In arriving at the amount due the Contractor under this clause, there shall be deducted—

1. All un-liquidated advance or other payments to the Contractor under the terminated portion of this contract;

2. Any claim which the Government has against the Contractor under this contract; and

3. The agreed price for, or the proceeds of sale of, materials, supplies, or other things acquired by the Contractor or sold under the provisions of this clause and not recovered by or credited to the Government.

L. If the termination is partial, the Contractor may file a proposal with the Contracting Officer for an equitable adjustment of the price(s) of the continued portion of the contract. The Contracting Officer shall make any equitable adjustment agreed upon. Any proposal by the Contractor for an equitable adjustment under this clause shall be requested within 90 days from the effective date of termination unless extended in writing by the Contracting Officer.

M. (1) The Government may, under the terms and conditions it prescribes, make partial payments and payments against costs incurred by the Contractor for the terminated portion of the contract, if the Contracting Officer believes the total of these payments will not exceed the amount to which the Contractor will be entitled.

(2) If the total payments exceed the amount finally determined to be due, the Contractor shall repay the excess to the Government upon demand, together with interest computed at the rate established by the Secretary of the Treasury under 50 U.S.C. App. 1215(b)(2). Interest shall be computed for the period from the date the excess payment is received by the Contractor to the date the excess is repaid. Interest shall not be charged on any excess payment due to a reduction in the Contractor's termination settlement proposal because of retention or other disposition of termination inventory until 10 days after the date of the retention or disposition, or a later date determined by the Contracting Officer because of the circumstances.

N. Unless otherwise provided in this contract or by statute, the Contractor shall maintain all records and documents relating to the terminated portion of this contract for 3 years after final settlement. This includes all books and other evidence bearing on the Contractor's costs and expenses under this contract. The Contractor shall make these records and documents available to the Government, at the Contractor's office, at all reasonable times, without any direct charge. If approved by the Contracting Officer, photographs, microphotographs, or other authentic reproductions may be maintained instead of original records and documents.

19. Default (Fixed-Price Construction) (FAR 52.249-10, Apr 1984)

A. If the Contractor refuses or fails to prosecute the work or any separable part, with the diligence that will insure its completion within the time specified in this contract including any extension, or fails to complete the work within this time, the Government may, by written notice to the Contractor, terminate the right to proceed with the work (or the separable part of the work) that has been delayed. In this event, the Government may take over the work and complete it by contract or otherwise, and may take possession of and use any materials, appliances, and plant on the work site necessary for completing the work. The Contractor and its sureties shall be liable for any damage to the Government resulting from the Contractor's refusal or failure to complete the work within the specified time, whether or not the Contractor's right to proceed with the work is terminated. This liability includes any increased costs incurred by the Government in completing the work.

B. The Contractor's right to proceed shall not be terminated nor the Contractor charged with damages under this clause, if—

1. The delay in completing the work arises from unforeseeable causes beyond the control and without the fault or negligence of the Contractor. Examples of such causes include—

(i) Acts of God or of the public enemy,

(ii) Acts of the Government in either its sovereign or contractual capacity,

(iii) Acts of another Contractor in the performance of a contract with the Government,

(iv) Fires,

(v) Floods,

(vi) Epidemics,

(vii) Quarantine restrictions,

(viii) Strikes,

(ix) Freight embargoes,

(x) Unusually severe weather, or

(xi) Delays of subcontractors or suppliers at any tier arising from unforeseeable causes beyond the control and without the fault or negligence of both the Contractor and the subcontractors or suppliers; and

2. The Contractor, within 10 days from the beginning of any delay (unless extended by the Contracting Officer), notifies the Contracting Officer in writing of the causes of delay. The Contracting Officer shall ascertain the facts and the extent of delay. If, in the judgment of the Contracting Officer, the findings of fact warrant such action, the time for completing the work shall be extended. The findings of the Contracting Officer shall be final and conclusive on the parties, but subject to appeal under the Disputes clause.

C. If, after termination of the Contractor's right to proceed, it is determined that the Contractor was not

in default, or that the delay was excusable, the rights and obligations of the parties will be the same as if the termination had been issued for the convenience of the Government.

D. The rights and remedies of the Government in this clause are in addition to any other rights and remedies provided by law or under this contract.

20. Failure to Perform - Construction

A. Subject to the Excusable Delays clause, if the Contractor fails to perform this Contract under its terms, Battelle shall give the Contractor written notice stating the failure. Thereafter, regardless of any other provision of this Contract, the Contractor shall not be entitled to an equitable adjustment under either this Contract or any related Contract, to the extent the equitable adjustment arises from the Contractor's failure to perform or from any reasonable remedial action taken by Battelle based upon the failure.

B. The failure of Battelle to insist, in one or more instances, upon the performance of any term of this Contract is not a waiver of Battelle's right to future performance of such term, and the Contractor's obligation for future performance of such term shall continue in effect.

C. The rights and remedies of Battelle in this clause are in addition to any other rights and remedies provided by law or under this Contract.

21. Excusable Delays (FAR 52.249-14, Apr 1984)

A. Except for defaults of subcontractors at any tier, the Contractor shall not be in default because of any failure to perform this contract under its terms if the failure arises from causes beyond the control and without the fault or negligence of the Contractor. Examples of these causes are (1) acts of God or of the public enemy, (2) acts of the Government in either its sovereign or contractual capacity, (3) fires, (4) floods, (5) epidemics, (6) quarantine restrictions, (7) strikes, (8) freight embargoes, and (9) unusually severe weather. In each instance, the failure to perform must be beyond the control and without the fault or negligence of the Contractor. "Default" includes failure to make progress in the work so as to endanger performance.

B. If the failure to perform is caused by the failure of a subcontractor at any tier to perform or make progress, and if the cause of the failure was beyond the control of both the Contractor and subcontractor, and without the fault or negligence of either, the Contractor shall not be deemed to be in default, unless—

1. The subcontracted supplies or services were obtainable from other sources;

2. The Contracting Officer ordered the Contractor in writing to purchase these supplies or services from the other source; and

3. The Contractor failed to comply reasonably with this order.

C. Upon request of the Contractor, the Contracting Officer shall ascertain the facts and extent of the failure. If the Contracting Officer determines that any failure to perform results from one or more of the causes above, the completion time shall be revised, subject to the rights of the Government under the termination clause of this contract.

22. Disputes (FAR 52.233-1, July 2002)

A. This contract is subject to the Contract Disputes Act of 1978, as amended (41 U.S.C. 601-613).

B. Except as provided in the Act, all disputes arising under or relating to this contract shall be resolved under this clause.

C. "Claim," as used in this clause, means a written demand or written assertion by one of the contracting parties seeking, as a matter of right, the payment of money in a sum certain, the adjustment or interpretation of contract terms, or other relief arising under or relating to this contract. However, a written demand or written assertion by the Contractor seeking the payment of money exceeding $100,000 is not a claim under the Act until certified. A voucher, invoice, or other routine request for payment that is not in dispute when submitted is not a claim under the Act. The submission may be converted to a claim under the Act, by complying with the submission and certification requirements of this clause, if it is disputed either as to liability or amount or is not acted upon in a reasonable time.

D. (1) A claim by the Contractor shall be made in writing and, unless otherwise stated in this contract, submitted within 6 years after accrual of the claim to the Contracting Officer for a written decision. A claim by the Government against the Contractor shall be subject to a written decision by the Contracting Officer.

(2)(i) The Contractor shall provide the certification specified in paragraph (d)(2)(iii) of this clause when submitting any claim exceeding $100,000.

(ii) The certification requirement does not apply to issues in controversy that have not been submitted as all or part of a claim.

(iii) The certification shall state as follows: "I certify that the claim is made in good faith; that the supporting data are accurate and complete to the best of my knowledge and belief; that the amount requested accurately reflects the contract adjustment for which the Contractor believes the Government is liable; and that I am duly authorized to certify the claim on behalf of the Contractor."

(3) The certification may be executed by any person duly authorized to bind the Contractor with respect to the claim.

E. For Contractor claims of $100,000 or less, the Contracting Officer must, if requested in writing by the Contractor, render a decision within 60 days of the request. For Contractor-certified claims over $100,000, the Contracting Officer must, within 60 days, decide the claim or notify the Contractor of the date by which the decision will be made.

F. The Contracting Officer's decision shall be final unless the Contractor appeals or files a suit as provided in the Act.

G. If the claim by the Contractor is submitted to the Contracting Officer or a claim by the Government is presented to the Contractor, the parties, by mutual consent, may agree to use alternative dispute

resolution (ADR). If the Contractor refuses an offer for ADR, the Contractor shall inform the Contracting Officer, in writing, of the Contractor's specific reasons for rejecting the offer.

H. The Government shall pay interest on the amount found due and unpaid from (1) the date that the Contracting Officer receives the claim (certified, if required); or (2) the date that payment otherwise would be due, if that date is later, until the date of payment. With regard to claims having defective certifications, as defined in FAR 33.201, interest shall be paid from the date that the Contracting Officer initially receives the claim. Simple interest on claims shall be paid at the rate, fixed by the Secretary of the Treasury as provided in the Act, which is applicable to the period during which the Contracting Officer receives the claim and then at the rate applicable for each 6-month period as fixed by the Treasury Secretary during the pendency of the claim.

I. The Contractor shall proceed diligently with performance of this contract, pending final resolution of any request for relief, claim, appeal, or action arising under the contract, and comply with any decision of the Contracting Officer.

23. Indemnity (cl. 351C – Aug 2009)

Contractor shall indemnify and save harmless Battelle from and against any and all liabilities and losses for injury (including death) to persons (including but not limited to Contractor's employees) or damage to property to the extent caused by a negligent act or omission or willful misconduct of the Contractor, its agents, or employees that occur during the performance of this contract, including any and all expense, legal or otherwise, incurred in the investigation or defense of any claim.

This indemnification shall not include such injuries to any person or persons or damage to or destruction of any property to the extent caused by the negligence or omission of Battelle or its employees.

In no event shall either Contractor or Battelle be liable for any special, incidental, or consequential damages of any type or nature.

24. Public Release of Information

Information, data, photographs, sketches, and advertising relating to the work under this contract, which Contractor desires to release or publish, shall be submitted to Battelle for approval 60 days prior to the desired release date. As part of the approval request, Contractor shall identify the specific media to be used as well as other pertinent details of the proposed release. All releases, regardless of tier or supplier, must have Battelle's prior approval. Contractor shall include all provisions of this clause, including this sentence, in all lower-tier subcontracts under this contract.

25. Rights to Proposal Data

Except for the technical data contained on those pages of Contractor's proposal, which are specifically identified in this contract with specific reference to this clause and asserted by Contractor as being proprietary data, it is agreed that, as a condition of the award of this contract and notwithstanding the provisions of any notice appearing on the proposal or elsewhere, Battelle and the Government shall have the right to use, duplicate, disclose and have others do so, for any purpose whatsoever, the technical data contained in the proposal upon which this contract is based.

26. Bankruptcy (cl. 318 - Nov 2008)

If the Contractor enters into any proceeding related to bankruptcy, it shall give written notice to the Battelle Contracts Representative via certified mail within five days of initiation of the proceeding. The notification shall include the date on which the proceeding was filed, the identity and location of the court, and a listing of the Battelle purchase orders, contracts, or agreements affected.

MATERIAL REQUIREMENTS AND QUANTITIES

27. Material Requirements (FAR 52.211-5, Aug 2000)

A. *Definitions*.

As used in this clause—

"New" means composed of previously unused components, whether manufactured from virgin material, recovered material in the form of raw material, or materials and by-products generated from, and reused within, an original manufacturing process; *provided* that the supplies meet contract requirements, including but not limited to, performance, reliability, and life expectancy.

"Reconditioned" means restored to the original normal operating condition by readjustments and material replacement.

"Recovered material" means waste materials and by-products recovered or diverted from solid waste, but the term does not include those materials and by-products generated from, and commonly reused within, an original manufacturing process.

"Remanufactured" means factory rebuilt to original specifications.

"Virgin material" means—

1. Previously unused raw material, including previously unused copper, aluminum, lead, zinc, iron, other metal or metal ore; or
2. Any undeveloped resource that is, or with new technology will become, a source of raw materials.

B. Unless this contract otherwise requires virgin material or supplies composed of or manufactured from virgin material, the Contractor shall provide supplies that are new, reconditioned, or remanufactured, as defined in this clause.

C. A proposal to provide unused former Government surplus property shall include a complete description of the material, the quantity, the name of the Government agency from which acquired, and the date of acquisition.

D. A proposal to provide used, reconditioned, or remanufactured supplies shall include a detailed description of such supplies and shall be submitted to the Contracting Officer for approval.

E. Used, reconditioned, or remanufactured supplies, or unused former Government surplus property, may be used in contract performance if the Contractor has proposed the use of such supplies, and the

Contracting Officer has authorized their use.

28. Brand Name or Equal (FAR 52.211-6, Aug 1999)

A. If an item in this solicitation is identified as "brand name or equal," the purchase description reflects the characteristics and level of quality that will satisfy the Government's needs. The salient physical, functional, or performance characteristics that "equal" products must meet are specified in the solicitation.

B. To be considered for award, offers of "equal" products, including "equal" products of the brand name manufacturer, must—

1. Meet the salient physical, functional, or performance characteristic specified in this solicitation;

2. Clearly identify the item by—

(i) Brand name, if any; and

(ii) Make or model number;

3. Include descriptive literature such as illustrations, drawings, or a clear reference to previously furnished descriptive data or information available to the Contracting Officer; and

4. Clearly describe any modifications the offeror plans to make in a product to make it conform to the solicitation requirements. Mark any descriptive material to clearly show the modifications.

C. The Contracting Officer will evaluate "equal" products on the basis of information furnished by the offeror or identified in the offer and reasonably available to the Contracting Officer. The Contracting Officer is not responsible for locating or obtaining any information not identified in the offer.

D. Unless the offeror clearly indicates in its offer that the product being offered is an "equal" product, the offeror shall provide the brand name product referenced in the solicitation.

29. Variation in Estimated Quantity (FAR 52.211-18, Apr 1984)

If the quantity of a unit-priced item in this contract is an estimated quantity and the actual quantity of the unit-priced item varies more than 15 percent above or below the estimated quantity, an equitable adjustment in the contract price shall be made upon demand of either party. The equitable adjustment shall be based upon any increase or decrease in costs due solely to the variation above 115 percent or below 85 percent of the estimated quantity. If the quantity variation is such as to cause an increase in the time necessary for completion, the Contractor may request, in writing, an extension of time, to be received by the Contracting Officer within 10 days from the beginning of the delay, or within such further period as may be granted by the Contracting Officer before the date of final settlement of the contract. Upon the receipt of a written request for an extension, the Contracting Officer shall ascertain the facts and make an adjustment for extending the completion date as, in the judgment of the Contracting Officer, is justified.

ENVIRONMENTAL SAFETY AND HEALTH

30. Environment, Safety, and Health Requirements - Offsite (cl. 3113e – May 2012)

A. In performing work under this contract at its own facilities or any other location that is not a DOE-owned or leased facility, the Contractor shall comply with all applicable federal, state, and local environment, safety, and health laws and regulations. The Contractor shall also perform work safely, in a manner that ensures adequate protection for employees, the public, and the environment, and shall be accountable for the safe performance of work. The Contractor shall exercise a degree of care commensurate with the work and the associated hazards. The Contractor shall ensure that management of environment, safety, and health functions and activities becomes an integral but visible part of the Contractor's work planning and execution processes.

B. The Contractor is responsible for its subcontractors' compliance with the environment, safety, and health requirements of this contract.

31. Environment, Safety, and Health Requirements (10 CFR 851)

Contractor shall refer to the Contract Schedule for any other Environment, Safety, and Health requirements pertaining to 10 CFR 851, and shall comply with such requirements, when performing any work under this contract on property or facilities owned or controlled by Battelle that are identified as PNNL Work Sites or on property or facilities owned or controlled by the United States Department of Energy (DOE), other than PNNL.

32. Notifications and Investigations

A. ***Emergency Notifications***

1. For onsite emergencies (police, fire, rescue, hazmat) call 509-375-2400.

2. For offsite emergencies (police, fire, rescue, hazmat) call 911.

B. ***Event Notification***

The Contractor shall notify the Battelle Construction Manager or Battelle Contracts Representative immediately of any OSHA-recordable injuries/illnesses, any "off-normal occurrences," or Government property damaged that the Contractor determines to have occurred in the course of operations onsite and shall furnish such further information as the Battelle Construction Manager or Battelle Contracts Representative may require. An "off-normal occurrence" is any unplanned or unexpected event, or the discovery of a deficiency in a procedure, plan, or system that has real or potentially undesirable consequences to personnel, equipment, facilities, the environment, and/or programs.

C. ***Accident Investigation***

1. The Contractor shall cooperate in the conduct of accident investigations which result in recordable injury/illness, property damage, fire, radiation event, and fatality.

2. When a Contractor employee is involved in a serious event or accident, the Contractor shall implement the following actions:

A. Secure the event scene from disturbance and

unauthorized entry pending arrival of Battelle Representatives.

B. Keep equipment or articles involved in the event from being operated, moved, or otherwise altered or repaired.

33. Solid Waste Management

A. Solid Waste Management. The Contractor is responsible to manage solid waste in accordance with all applicable Federal, State and local laws. The Contractor shall follow Battelle's Standards Based Management System requirements for accumulation, interim storage and final disposal of the following types of solid waste:

1. Hazardous waste including soil or debris contaminated with hazardous waste.
2. Radioactive contaminated waste, materials and equipment.
3. Materials containing asbestos.
4. Materials containing polychlorinated biphenyls (PCBs).
5. Unused residual construction materials, not the property of Battelle, may be retained by the Contractor for future use or disposal by the Contractor. Such materials must otherwise be managed in accordance with Battelle's SBMS requirements while on Battelle managed property.

B. Environmental Permits / Notifications. The Contractor shall coordinate the preparation of environmental permit applications / notifications with Battelle's ES&H Organization for the purpose of integrating new and existing environmental approvals. The Contractor shall Notify Battelle, prior to commencing construction, in the following circumstances:

1. Clean Air Act Permits.

(i). Notice of Intent to Remove Asbestos. The Contractor shall contact Battelle before proceeding with work that could disturb asbestos and materials containing asbestos. A representative from Battelle's ES&H organization will assist the Contractor in preparing the Notice of Intent to remove asbestos for submittal to the appropriate regulatory agency.

(ii). Construction / Demolition activities which could disturb / disperse radioactive contamination (e.g. excavation of contaminated soils or demolition of contaminated structures)

2. Clean Water Act Permits. The Contractor shall notify Battelle prior to commencing construction activities which may require clean water act permits including but not limited to:

(i). Disturbing greater than one acre of land

(ii). Construction of ground water wells

(iii). Discharge of liquid effluent (to ground; or existing sewer systems)

(iv). Installation of temporary or permanent septic systems

(v). Placement or installation of above-ground tanks for fuel storage

3. Underground Storage Tanks. The Contractor shall notify Battelle prior to commencing construction activities to install or remove any underground storage tank.

C. Spills and Releases. The Contractor shall manage hazardous substances (as defined by State of Washington regulations, including petroleum) in accordance with regulatory requirements and in a manner that prevents accidental spillage or release to the environment. In the event of a spill or release, the Contractor shall immediately:

1. Notify the Battelle Construction Manager of the spill; and
2. Respond to, control, and remediate any spill or release of hazardous substances or hazardous waste, managing spill residues in accordance with applicable Federal, DOE, State and Local regulations and requirements.

34. Waste Reduction Program (FAR 52.223-12, May 2011)

A. *Definitions*. As used in this clause—

"Recycling" means the series of activities, including collection, separation, and processing, by which products or other materials are recovered from the solid waste stream for use in the form of raw materials in the manufacture of products other than fuel for producing heat or power by combustion.

"Waste prevention" means any change in the design, manufacturing, purchase, or use of materials or products (including packaging) to reduce their amount or toxicity before they are discarded. Waste prevention also refers to the reuse of products or materials.

"Waste reduction" means preventing or decreasing the amount of waste being generated through waste prevention, recycling, or purchasing recycled and environmentally preferable products.

B. Consistent with the requirements of section 3(e) of Executive Order 13423, the Contractor shall establish a program to promote cost-effective waste reduction in all operations and facilities covered by this contract. The Contractor's programs shall comply with applicable Federal, State, and local requirements, specifically including Section 6002 of the Resource Conservation and Recovery Act (42 U.S.C. 6962, *et seq*.) and implementing regulations (40 CFR Part 247).

35. Accident Prevention (FAR 52.236-13 Nov 1991)

A. The Contractor shall provide and maintain work environments and procedures which will—

1. Safeguard the public and Government personnel, property, materials, supplies, and equipment exposed to Contractor operations and activities;
2. Avoid interruptions of Government operations and delays in project completion dates; and
3. Control costs in the performance of this contract.

B. For these purposes on contracts for construction or dismantling, demolition, or removal of improvements,

the Contractor shall—

1. Provide appropriate safety barricades, signs, and signal lights;

2. Comply with the standards issued by the Secretary of Labor at 29 CFR Part 1926 and 29 CFR Part 1910; and

3. Ensure that any additional measures the Contracting Officer determines to be reasonably necessary for the purposes are taken.

C. If this contract is for construction or dismantling, demolition or removal of improvements with any Department of Defense agency or component, the Contractor shall comply with all pertinent provisions of the latest version of U.S. Army Corps of Engineers Safety and Health Requirements Manual, EM 385-1-1, in effect on the date of the solicitation.

D. Whenever the Contracting Officer becomes aware of any noncompliance with these requirements or any condition which poses a serious or imminent danger to the health or safety of the public or Government personnel, the Contracting Officer shall notify the Contractor orally, with written confirmation, and request immediate initiation of corrective action. This notice, when delivered to the Contractor or the Contractor's representative at the work site, shall be deemed sufficient notice of the noncompliance and that corrective action is required. After receiving the notice, the Contractor shall immediately take corrective action. If the Contractor fails or refuses to promptly take corrective action, the Contracting Officer may issue an order stopping all or part of the work until satisfactory corrective action has been taken. The Contractor shall not be entitled to any equitable adjustment of the contract price or extension of the performance schedule on any stop work order issued under this clause.

E. The Contractor shall insert this clause, including this paragraph (e), with appropriate changes in the designation of the parties, in subcontracts.

36. Sustainable Acquisition Requirements (cl. 381 – March 2012)

Battelle is committed to managing its operations in a sustainable manner which promotes the natural environment and protects the health and well-being of its employees and contractor service providers. In the performance of work under this contract, the Contractor shall provide products that comply with Federal law as follows (regardless of any notations on the respective websites):

Recycled Content as designated by the Environmental Protection Agency (EPA) - http://www.epa.gov/epawaste/conserve/tools/cpg/products/index.htm

Biobased Products as designated by the United States Department of Agriculture (USDA) - http://www.biopreferred.gov/ProposedAndFinalItemDesignations.aspx

Energy-Efficient Products such as Energy Star certified and FEMP-designated products - http://www.energystar.gov/index.cfm?c=product_specs.pt_product_specs and http://www1.eere.energy.gov/femp/technologies/eep_purchasingspecs.html

Water-Efficient Products as designated by the EPA for their WaterSense® label program - http://www.epa.gov/watersense/products/index.html

Environmentally preferable and energy efficient electronics, including desktop computers, laptops and monitors, as specified at the Green Electronics Council's Electronic Products Environmental Assessment Tool (EPEAT) registry- http://ww2.epeat.net/searchoptions.aspx)

Non-Ozone Depleting Alternative Products as designated by the EPA - http://www.epa.gov/ozone/snap/index.html

Low-Emitting Volatile Organic Compounds (VOC) Materials as designated by the Federal Leadership in High Performance and Sustainable Buildings Guiding Principles (including adhesives, sealants, paints, carpet systems, and furnishings) for building modifications, maintenance, and cleaning

QUALITY ASSURANCE

37. Quality Assurance

The Contractor shall assure that all work (e.g., submittals, products, manufacture, fabrication, installation of products and components, workmanship, inspection, and testing) performed by it or its Subcontractors and suppliers is in compliance with all contract documents (i.e., technical specifications, drawings, and Division 1). Work may include products and services (e.g., welding, nondestructive examination, soldering workmanship, manufacturer of radiation calibration standards, and equipment) that necessitate additional or special Quality Assurance / Quality Control, requirements, including the need for a documented Quality Assurance program. When such requirements are applicable to the Contractor's work, they will be identified specifically in the contract documents. The Contractor shall require, in writing, Subcontractors of all tiers to comply with all applicable contractual requirements.

38. Suspect / Counterfeit Items

A. Battelle's Suspect / Counterfeit Items (S/CI) program responds to the S/CI requirements in the following documents:

1. DOE Order 414.1C, —Quality Assurance Attachment 3, addresses the requirement for the S/CI prevention process and the control of S/CIs;

2. DOE G 414.1-3, —Suspect/Counterfeit Items Guide for Use with 10 CFR 830, Subpart A, Energy/Nuclear Safety Management/Quality Assurance Requirements and DOE O 414.1B, Quality Assurance;

3. DOE Order 231.1A Change 1, —Environment, Safety, and Health Reporting, and DOE Order 221.1, —Reporting Fraud, Waste, and Abuse to the Office of Inspector General addresses reporting requirements for discovery of S/CIs.

B. S/CIs may pose immediate and potential threats to the safety of Battelle, DOE and contractor workers, the public, and the environment. Failure of a safety or mission critical system due to an S/CI could also have security implications at DOE facilities. The most common S/CIs found at Battelle and DOE facilities have been threaded fasteners fraudulently marked as high-strength bolts, and refurbished electrical circuit breakers sold and distributed under false

certifications. Falsified documentation has also misled purchasers into accepting S/CIs that do not conform to specified requirements. Forms of misrepresentation include the following:

1. Falsified product sources (counterfeits);
2. Falsified or modified quality records;
3. False marking as to class, type, or grade;
4. Mixing of unmarked with marked materials;
5. False labeling as to qualification or acceptance by testing/certifying organizations; and
6. Used products misrepresented as new products.

C. S/CI Awareness Training Manual developed by DOE-Office of Corporate Safety Analysis (HS-30) that can help to identify and disposition S/CI's discovered at Battelle and DOE facilities can be accessed at the following linkhttp://energy.gov/sites/prod/files/2014/06/f16/SCI_Training_Manual.pdf.

D. The Contractor shall assure that all products delivered on this contract do not contain S/CI parts. If S/CI parts are discovered, notify Battelle for further direction. All discrepant part(s)/product(s) will be replaced at the Contractor's expense.

39. Contractor Inspection Requirements (FAR 52.246-1, Apr 1984)

The Contractor is responsible for performing or having performed all inspections and tests necessary to substantiate that the supplies or services furnished under this contract conform to contract requirements, including any applicable technical requirements for specified manufacturers' parts. This clause takes precedence over any Government inspection and testing required in the contract's specifications, except for specialized inspections or tests specified to be performed solely by the Government.

40. Inspection of Construction (FAR 52.246-12, Aug 1996)

A. *Definition.* "Work" includes, but is not limited to, materials, workmanship, and manufacture and fabrication of components.

B. The Contractor shall maintain an adequate inspection system and perform such inspections as will ensure that the work performed under the contract conforms to contract requirements. The Contractor shall maintain complete inspection records and make them available to the Government. All work shall be conducted under the general direction of the Contracting Officer and is subject to Government inspection and test at all places and at all reasonable times before acceptance to ensure strict compliance with the terms of the contract.

C. Government inspections and tests are for the sole benefit of the Government and do not—

1. Relieve the Contractor of responsibility for providing adequate quality control measures;
2. Relieve the Contractor of responsibility for damage to or loss of the material before acceptance;
3. Constitute or imply acceptance; or
4. Affect the continuing rights of the Government after acceptance of the completed work under paragraph (i) of this section.

D. The presence or absence of a Government inspector does not relieve the Contractor from any contract requirement, nor is the inspector authorized to change any term or condition of the specification without the Contracting Officer's written authorization.

E. The Contractor shall promptly furnish, at no increase in contract price, all facilities, labor, and material reasonably needed for performing such safe and convenient inspections and tests as may be required by the Contracting Officer. The Government may charge to the Contractor any additional cost of inspection or test when work is not ready at the time specified by the Contractor for inspection or test, or when prior rejection makes re-inspection or retest necessary. The Government shall perform all inspections and tests in a manner that will not unnecessarily delay the work. Special, full size, and performance tests shall be performed as described in the contract.

F. The Contractor shall, without charge, replace or correct work found by the Government not to conform to contract requirements, unless in the public interest the Government consents to accept the work with an appropriate adjustment in contract price. The Contractor shall promptly segregate and remove rejected material from the premises.

G. If the Contractor does not promptly replace or correct rejected work, the Government may—

1. By contract or otherwise, replace or correct the work and charge the cost to the Contractor; or
2. Terminate for default the Contractor's right to proceed.

H. If, before acceptance of the entire work, the Government decides to examine already completed work by removing it or tearing it out, the Contractor, on request, shall promptly furnish all necessary facilities, labor, and material. If the work is found to be defective or nonconforming in any material respect due to the fault of the Contractor or its subcontractors, the Contractor shall defray the expenses of the examination and of satisfactory reconstruction. However, if the work is found to meet contract requirements, the Contracting Officer shall make an equitable adjustment for the additional services involved in the examination and reconstruction, including, if completion of the work was thereby delayed, an extension of time.

I. Unless otherwise specified in the contract, the Government shall accept, as promptly as practicable after completion and inspection, all work required by the contract or that portion of the work the Contracting Officer determines can be accepted separately. Acceptance shall be final and conclusive except for latent defects, fraud, gross mistakes amounting to fraud, or the Government's rights under any warranty or guarantee.

41. Responsibility for Supplies (FAR 52.246-16, Apr 1984)

A. Title to supplies furnished under this contract shall

pass to the Government upon formal acceptance, regardless of when or where the Government takes physical possession, unless the contract specifically provides for earlier passage of title.

B. Unless the contract specifically provides otherwise, risk of loss of or damage to supplies shall remain with the Contractor until, and shall pass to the Government upon—

1. Delivery of the supplies to a carrier, if transportation is f.o.b. origin; or

2. Acceptance by the Government or delivery of the supplies to the Government at the destination specified in the contract, whichever is later, if transportation is f.o.b. destination.

C. Paragraph (b) of this clause shall not apply to supplies that so fail to conform to contract requirements as to give a right of rejection. The risk of loss of or damage to such nonconforming supplies remains with the Contractor until cure or acceptance. After cure or acceptance, paragraph (b) of this clause shall apply.

D. Under paragraph (b) of this clause, the Contractor shall not be liable for loss of or damage to supplies caused by the negligence of officers, agents, or employees of the Government acting within the scope of their employment.

42. Warranty of Construction (FAR 52.246-21, Mar 1994)

A. In addition to any other warranties in this contract, the Contractor warrants, except as provided in paragraph (i) of this clause, that work performed under this contract conforms to the contract requirements and is free of any defect in equipment, material, or design furnished, or workmanship performed by the Contractor or any subcontractor or supplier at any tier.

B. This warranty shall continue for a period of 1 year from the date of final acceptance of the work. If the Government takes possession of any part of the work before final acceptance, this warranty shall continue for a period of 1 year from the date the Government takes possession.

C. The Contractor shall remedy at the Contractor's expense any failure to conform, or any defect. In addition, the Contractor shall remedy at the Contractor's expense any damage to Government-owned or controlled real or personal property, when that damage is the result of—

1. The Contractor's failure to conform to contract requirements; or

2. Any defect of equipment, material, workmanship, or design furnished.

D. The Contractor shall restore any work damaged in fulfilling the terms and conditions of this clause. The Contractor's warranty with respect to work repaired or replaced will run for 1 year from the date of repair or replacement.

E. The Contracting Officer shall notify the Contractor, in writing, within a reasonable time after the discovery of any failure, defect, or damage.

F. If the Contractor fails to remedy any failure, defect, or damage within a reasonable time after receipt of notice, the Government shall have the right to replace, repair, or otherwise remedy the failure, defect, or damage at the Contractor's expense.

G. With respect to all warranties, express or implied, from subcontractors, manufacturers, or suppliers for work performed and materials furnished under this contract, the Contractor shall—

A. Obtain all warranties that would be given in normal commercial practice;

B. Require all warranties to be executed, in writing, for the benefit of the Government, if directed by the Contracting Officer; and

C. Enforce all warranties for the benefit of the Government, if directed by the Contracting Officer.

H. In the event the Contractor's warranty under paragraph (b) of this clause has expired, the Government may bring suit at its expense to enforce a subcontractor's, manufacturer's, or supplier's warranty.

I. Unless a defect is caused by the negligence of the Contractor or subcontractor or supplier at any tier, the Contractor shall not be liable for the repair of any defects of material or design furnished by the Government nor for the repair of any damage that results from any defect in Government-furnished material or design.

J. This warranty shall not limit the Government's rights under the Inspection and Acceptance clause of this contract with respect to latent defects, gross mistakes, or fraud.

CONSTRUCTION

43. Site Access Control

A. Any person performing work in Battelle facilities is required to wear a security badge identifying him/her. Only individuals possessing proof of valid United States Citizenship may be issued a security badge. Individuals requiring a badge for access where the presentation of identification (ID) is required must either present a driver's license or ID card from a REAL ID compliant state, or an alternate acceptable form of ID, before "unescorted" access will be given. If work is performed on site, but not within a facility then a security badge is not required.

B. Contractor shall be responsible for controlling access to the Site and ensuring that all Contractor personnel including Subcontractor personnel, delivery drivers and vendors have received adequate and appropriate security and site orientation. Visible symbols such as hard hat stickers, badges, etc., shall be used to indicate the person has Contractor authorization to be on the Site.

C. Unless Battelle issued badges are identified elsewhere in the contract documents as a condition of site access, Contractor shall have general use of areas designated in the contract documents for construction operations during the contract performance period.

D. Personnel protective equipment (PPE) requirements shall be appropriate to the identified hazards present and shall be as indicated in the General and

Administrative Requirements for the Work (Division I Requirements) and on the Contractors approved Job Safety Analysis (JSA).

E. Contractor is responsible to ensure that it's direct hired and Subcontractor employees who will work on the Site and are newly hired for the Work, present proof of a negative drug screen dated within the last three (3) months prior to authorizing initial site access. Contractor employees hired prior to the start of this Work and now assigned to this Work must present proof of a negative drug screen dated within the last 12 months.

1. Only drug tests by a Substance Abuse and Mental Health Services (SAMHSA) certified laboratory will be considered acceptable as proof of a negative drug screen.

2. A confirmed positive will deny employee access to the Site for a minimum of one (1) year.

3. Suspect Behavior or Circumstances. If Battelle, or the Contractor or Subcontractor believes that a Contractor or Subcontractor employee's job performance is being adversely affected by drug or substance (including alcohol) use, Battelle may direct the Contractor to remove the employee from the Site and require the employee to submit to drug testing at Contractor's expense. Examples of behavior or circumstances indicating possible drug or substance abuse are possession, sale or delivery, or credible information that an individual is using drugs or abusing alcohol, or an accident or injury.

F. ***Disciplinary Policy and Suspension of Access***

1. General. It is the Contractor's responsibility to implement a policy which provides for discipline of unacceptable behaviors. Disciplinary policy should categorize the severity of the misconduct with a graded approach to implementing the disciplinary actions that result.

2. Contractor may adopt Battelle's model disciplinary policy or submit for approval a Contractor plan.

3. If the Contractor or its Subcontractors fail to have or enforce an approved plan or fail to take appropriate disciplinary action(s) as a result of identified employee misconduct, Battelle will respond to misconduct using a graded approach, considering the nature and severity of the misconduct in accordance with the following general guidelines.

(i). First Infraction. A first infraction could result in actions ranging from a verbal reprimand to denying the employee further access to the site for the remainder of the work.

(ii). II. Second Infraction. A second infraction, not necessarily of the same type, could result in actions ranging from a written reprimand to denying the employee further access to the site for the remainder of the work.

(iii). III. Third Infraction. A third infraction could result in suspension from the site ranging from 3-days to 365 days, or the remainder of the work, whichever is longer.

G. ***Battelle Issued Badges***

1. If a Battelle issued badge is required for persons performing work on the Site, Battelle's Badging office is located in the Environmental Technology Building (ETB), Room 1104. The ETB Building address is 3200 Q Avenue, Richland WA 99352. Badges may be picked up between the hours of 7:30 A.M. to 4:00 P.M. Monday through Friday (excluding holidays).

2. Employee Termination / Completion of the Work. Upon termination of employment or completion of the Contractors work, and before final payment shall be made, all badges and dosimeters issued to Contractor employees shall be returned to the issuing office.

3. Lost badges and/or dosimeter shall be reported immediately upon discovery to Battelle. Battelle will charge Contractor $100 for each badge or dosimeter not returned. The charge shall be deducted from payments otherwise due the Contractor. Refund of charges, previously collected for badges and/or dosimeters subsequently found will not be made after the date of final payment to the Contractor.

4. Training required for a Battelle issued Badge

(i). GERT / LAB Orientation. If Contractor employees are required to successfully complete General Employee Radiation Training (GERT) / Battelle Laboratory (LAB) Orientation, GERT / LAB Orientation is estimated to take four (4) hours. The employee cost of the orientation shall be by the Contractor.

(ii). Vendor/Contractor Orientation for non-Battelle personnel. If Contractor employees are required to successfully complete Vendor/Contractor Orientation, it is estimated to take 2 ½ hours. The employee cost of the orientation shall be by the Contractor.

(iii). Other Required Training. Other Battelle sponsored training identified as required for performance of the contract work will be provided to the Contractor at no cost for the trainer and/or course fees. Contractor shall be responsible for the cost of the employee's time to attend. Contractor shall allow Battelle two (2) weeks to schedule the training after proper notification.

(iv). Failed Training / Tests and Contractor —No-Shows. Contractor shall be responsible for the trainer / classroom costs associated with Contractor employees that have either failed to successfully complete a required training or have failed to show up for a scheduled training date. Costs to be charged the Contractor for retaking failed training or rescheduling due to no-shows is: $352.25 (each) for Radiation Worker I and/or II including GAP and refresher training; Lock & Tag training is $348.85; Respiratory Protection Worker training is $352.25; Asbestos Awareness, Hot Work Fire Watch and Lock-Out-Tag-Out Gap training are all

$350.75, all other Battelle sponsored training is $32.11.

(v). Offsite Training. Contractor shall be responsible for all offsite training as required for performance of the contract work. Training offered at the HAMMER facility is considered offsite, therefore the Contractor shall be responsible for course registration and payment of any fees. Quantitative Mask-Fit or additional respiratory training conducted at the HAMMER facility is considered offsite training, therefore the Contractor shall be responsible for course registration and payment of any fees.

44. Prohibited Articles

A. Prohibited Articles Anywhere. The following are Prohibited Articles anywhere on the Site and offsite locations under the cognizance of Battelle or the DOE:

1. Dangerous weapons
2. Explosives, ammunition, and incendiary devices
3. Controlled substances and drug paraphernalia
4. Alcoholic beverages
5. Contraband (includes other items prohibited by law).

B. Exclusion, Limited and/or Protected Areas. The following are Prohibited Articles within Exclusion, Limited and/or Protected Areas:

1. All items listed above, and
2. Privately owned recording equipment
3. Privately owned cameras (still, motion, video)
4. Privately owned computers and associated media (including palm pilots)
5. Privately owned cellular telephones
6. Privately owned radio transmitters.

45. Work Limitations, Restrictions & Requirements

A. ***Time***. "Time," if stated as a number of days, is calculated using calendar days, unless otherwise specified, and will include Saturdays, Sundays, and legal holidays. If the last day of the Contract period of performance falls on a Saturday, Sunday, or legal holiday, then the period shall include the next working day. The following holidays shall be non-work days under this Contract unless otherwise directed by Battelle:

New Year's Day

Memorial Day

Independence Day

Labor Day

Thanksgiving Day and the day after

Christmas Eve and Christmas Day

B. ***Working Hours***. Unless identified otherwise in the Division 1 General Requirements for the contract work, normal working hours are Monday through Friday from 7:00am to 3:30pm. The Contractor shall not perform work at the Site other than during normal working hours without prior written approval. The Contractor shall give Battelle at least two (2) hours prior notice if its employees are to be working after the normal shift period Monday through Friday. The Contractor shall give Battelle notice on the prior working day if its employees will be working before normal shift hours, Monday through Friday, or will be working at any time on Saturday, Sunday, or holidays. The notice shall include the type of work to be performed, location of work, date and hours of work, and description of any heavy equipment to be used. Battelle advance approval is required any time work is to be performed at other than normal shift periods.

C. ***Overhead Work Restrictions***. Under no conditions shall the Contractor operate or move cranes, hoists or similar equipment within 20 feet of overhead electrical conductors, guy wires, or substations, unless prior authorization for such operations is obtained from Battelle, giving full details of the method of equipment operations. Authorization from Battelle shall also be obtained when transporting materials, machinery, or other equipment, which establishes a height exceeding 15 feet from the road and/or ground surface.

D. ***Oversize Loads***. An Oversize Load permit is required when the vehicle or load exceeds: Width -8'-6" x Height –14ft x Length –40ft (single unit), or 48ft (single trailing unit). Contact Battelle to obtain the permit.

E. ***Moving Heavy Equipment***. The Contractor shall notify Battelle at least two (2) working days prior to the date it proposes to move any heavy equipment into or from the Worksite and shall not move any such equipment into or from the Worksite until receipt of written approval from Battelle. Heavy equipment will not be allowed to travel across existing paved roadways unless rubber tires or other adequate protection such as heavy planking protects such roadway. Movement of heavy equipment equipped with crawler-type treads on existing paved surfaces is forbidden and such equipment must be transported to the Worksite on rubber- tired trailers. Upon completion of the Work, the equipment shall be promptly removed from the Worksite.

F. ***System Outages***. Work, which requires any existing building utility system (including fire protection) to be taken out of service, shall be scheduled and performed so that the length of time the utility is out of service is held to a minimum. All material for the alteration and tie-in work shall be on hand when each utility service interruption is scheduled. The Contractor shall notify Battelle not less than five (5) working days prior to each required utility shutdown. All tie-in work shall be scheduled and performed so that the shutdown time will not exceed four (4) hours for water and two (2) hours for electrical or fire alarm. Battelle shall approve methods of performing the tie-in work prior to any utility system outage. Prior approval must be obtained for connection to and use of existing fire hydrants.

G. ***Excavation Requirements***.

1. Definition: "Excavations include any operation in which earth, rock, or other material in the ground (below existing grade) is moved, removed, or otherwise displaced by means or use of any hand

tools, mechanical equipment or explosives."

2. Excavation permitting is required when grading, trenching, digging, ditching, drilling, tunneling, scraping, pipe plowing, and driving ground rods or posts, at a depth of 12 inches or greater.

3. Where required, the Contractor shall provide an adequate supporting mechanism to prevent undermining or movement of any load bearing concrete slabs or footings. All excavations shall comply with OSHA and DOSH regulations.

4. In the event any underground pipe line, conduit or other object not shown on the drawings or otherwise indicated in the Specifications is encountered, the Contractor shall immediately stop work and notify Battelle.

5. Except as otherwise specified, protection (and restoration) of existing facilities shall be as specified in section titled "Protection of Existing Utilities." All underground piping, conduits, ducts, and other utilities shall be satisfactorily shored, braced and/or guyed as specified in the above referenced section.

6. Contractors shall hand-dig within five (5) feet of all known utilities.

H. ***Blind Penetration Requirements***.

1. All "Blind Penetrations" where the Contractor must penetrate into or through a wall, ceiling, floor or similar obstruction and the path of the penetration is not visible requires a Battelle Permit. The Contractor shall notify Battelle five (5) days in advance of any planned Blind Penetrations to allow Battelle time to issue the permit.

2. The Contractor shall perform a sub-surface scan using penetrating radar of the surface to be blind penetrated. The Contractor shall physically mark the location of any suspected embedment and do not proceed without release by Battelle if a suspected embedment is marked within 8 inches of the planned penetration.

3. All potentially energized circuits or sources in the proximity of the penetration shall be locked out and tagged by the Contractor in a de-energized condition.

4. All energized Contractor equipment used in blind penetrations shall be equipped with a "kill switch" or "drill stop" to effectively stop the Contractor equipment when the drill or energized penetrating equipment comes in contact with any metallic object.

5. Contractor shall notify Battelle immediately upon hitting an obstruction and/or the kill switch de-energizes the penetrating equipment. Disengaging the kill switch requires Battelle concurrence.

6. In addition to whatever other PPE the Contractor considers necessary for a Blind Penetration, the worker performing the penetration operation shall wear class 00, 500 volt rated, insulated gloves or insulated gloves rated for the voltage potential during the penetrating activity.

I. ***Adverse Weather Conditions.*** To insure worker safety, work or portions of work may be temporarily and incrementally shut down due to high winds, lighting, or other inclement weather as determined by Battelle. Contractor will not be additionally compensated in terms of cost or schedule for weather related shutdowns. Battelle will issue weather warnings via radio, telephone, public announcement, or in person. The Contractor shall ensure that all contractor and subcontractor personnel are apprised of the warnings and take the required actions as stated below.

1. Sustained winds greater than 15 mph – the necessity for crane operations will be closely scrutinized

2. Sustained winds greater than 25 mph and/or gusts greater than 40 mph – all crane activities must cease and be secured. All loose outdoor material shall be secured. The Contractor's Safety Supervisor shall evaluate work on roofs or elevated work surfaces before continuing. All personnel working outdoors are required to wear safety goggles. Depending on dust hazards, work may be stopped. Personnel may be directed to shelter.

3. Sustained winds greater than 30 mph and/or gusts greater than 45 mph – all outdoor work activities may be stopped. Personnel may be directed to shelter.

4. Sustained winds greater than 50 mph – outdoor work activities will be curtailed and limited to those approved by Battelle and Contractor's Safety Supervisor. Personnel will be directed to shelter. Site closure may be implemented and all work activities ceased.

5. Thunderstorm/lighting advisory based on lighting activity within a 30 mile radius of the site – Contractor personnel shall not work on roofs or elevated surfaces. Personnel shall stay away from equipment such as drilling rigs, cranes, boom trucks, or elevated work platforms. The "30-30 Rule" states, when you see lightning, count the time until you hear thunder. If this time is 30 seconds or less go immediately to a safe location. These protective measures shall remain in place until Battelle cancels the warning. The Hanford Weather Station (373-2716) or the National Weather Service Office (NWSO) located in Pendleton (541 276-7832) can be used to detect, locate, and determine if the hazardous weather pattern has dissipated or moved pass the 30 mile radius.

6. Contractor shall be responsible to provide snow removal and ensure safe walking and transfer conditions for walkways and access points around all site offices and work areas and the job-site within the project boundaries.

7. In response to winter storm conditions, Battelle may close or delay the site operation. If so, Battelle will make appropriate announcements and coordinate closures or early dismissals. Battelle's inclement weather hotline phone number is 509 375-2124.

8. Access to PNNL facility roofs during inclement

weather may be restricted or delayed until the appropriate mitigation of snow, ice, or frost can be eliminated. Authorization to access facility roofs are controlled by the Building Manager.

46. Performance of Work by the Contractor (FAR 52.236-1, Apr 1984)

The Contractor shall perform on the site, and with its own organization, work equivalent to at least fifteen percent [15%] of the total amount of work to be performed under the contract. This percentage may be reduced by a supplemental agreement to this contract if, during performing the work, the Contractor requests a reduction and the Contracting Officer determines that the reduction would be to the advantage of the Government.

47. Differing Site Conditions (FAR 52.236-2, Apr 1984)

A. The Contractor shall promptly, and before the conditions are disturbed, give a written notice to the Contracting Officer of—

   1. Subsurface or latent physical conditions at the site which differ materially from those indicated in this contract; or

   2. Unknown physical conditions at the site, of an unusual nature, which differ materially from those ordinarily encountered and generally recognized as inhering in work of the character provided for in the contract.

B. The Contracting Officer shall investigate the site conditions promptly after receiving the notice. If the conditions do materially so differ and cause an increase or decrease in the Contractor's cost of, or the time required for, performing any part of the work under this contract, whether or not changed as a result of the conditions, an equitable adjustment shall be made under this clause and the contract modified in writing accordingly.

C. No request by the Contractor for an equitable adjustment to the contract under this clause shall be allowed, unless the Contractor has given the written notice required; *provided*, that the time prescribed in paragraph (a) of this clause for giving written notice may be extended by the Contracting Officer.

D. No request by the Contractor for an equitable adjustment to the contract for differing site conditions shall be allowed if made after final payment under this contract.

48. Site Investigation and Conditions Affecting the Work (FAR 52.236-3, Apr 1984)

A. The Contractor acknowledges that it has taken steps reasonably necessary to ascertain the nature and location of the work, and that it has investigated and satisfied itself as to the general and local conditions which can affect the work or its cost, including but not limited to (1) conditions bearing upon transportation, disposal, handling, and storage of materials; (2) the availability of labor, water, electric power, and roads; (3) uncertainties of weather, river stages, tides, or similar physical conditions at the site; (4) the conformation and conditions of the ground; and (5) the character of equipment and facilities needed preliminary to and during work performance. The Contractor also acknowledges that it has satisfied itself as to the character, quality, and quantity of surface and subsurface materials or obstacles to be encountered insofar as this information is reasonably ascertainable from an inspection of the site, including all exploratory work done by the Government, as well as from the drawings and specifications made a part of this contract. Any failure of the Contractor to take the actions described and acknowledged in this paragraph will not relieve the Contractor from responsibility for estimating properly the difficulty and cost of successfully performing the work, or for proceeding to successfully perform the work without additional expense to the Government.

B. The Government assumes no responsibility for any conclusions or interpretations made by the Contractor based on the information made available by the Government. Nor does the Government assume responsibility for any understanding reached or representation made concerning conditions which can affect the work by any of its officers or agents before the execution of this contract, unless that understanding or representation is expressly stated in this contract.

49. Physical Data (FAR 52.236-4, Apr 1984)

Data and information furnished or referred to below is for the Contractor's information. The Government shall not be responsible for any interpretation of or conclusion drawn from the data or information by the Contractor.

50. Material and Workmanship (FAR 52.236-5, Apr 1984)

A. All equipment, material, and articles incorporated into the work covered by this contract shall be new and of the most suitable grade for the purpose intended, unless otherwise specifically provided in this contract. References in the specifications to equipment, material, articles, or patented processes by trade name, make, or catalog number, shall be regarded as establishing a standard of quality and shall not be construed as limiting competition. The Contractor may, at its option, use any equipment, material, article, or process that, in the judgment of the Contracting Officer, is equal to that named in the specifications, unless otherwise specifically provided in this contract.

B. The Contractor shall obtain the Contracting Officer's approval of the machinery and mechanical and other equipment to be incorporated into the work. When requesting approval, the Contractor shall furnish to the Contracting Officer the name of the manufacturer, the model number, and other information concerning the performance, capacity, nature, and rating of the machinery and mechanical and other equipment. When required by this contract or by the Contracting Officer, the Contractor shall also obtain the Contracting Officer's approval of the material or articles which the Contractor contemplates incorporating into the work. When requesting approval, the Contractor shall provide full information concerning the material or articles. When directed to do so, the Contractor shall submit samples for approval at the Contractor's expense, with all shipping charges prepaid. Machinery, equipment, material, and articles that do not have the required approval shall be installed or used at the risk of subsequent rejection.

C. All work under this contract shall be performed in a

skillful and workmanlike manner. The Contracting Officer may require, in writing, that the Contractor remove from the work any employee the Contracting Officer deems incompetent, careless, or otherwise objectionable.

51. Superintendence by the Contractor (FAR 52.236-6, Apr 1984)

At all times during performance of this contract and until the work is completed and accepted, the Contractor shall directly superintend the work or assign and have on the worksite a competent superintendent who is satisfactory to the Contracting Officer and has authority to act for the Contractor.

52. Permits and Responsibilities (FAR 52.236-7, Nov 1991)

The Contractor shall, without additional expense to the Government, be responsible for obtaining any necessary licenses and permits, and for complying with any Federal, State, and municipal laws, codes, and regulations applicable to the performance of the work. The Contractor shall also be responsible for all damages to persons or property that occur as a result of the Contractor's fault or negligence. The Contractor shall also be responsible for all materials delivered and work performed until completion and acceptance of the entire work, except for any completed unit of work which may have been accepted under the contract.

53. Other Contracts (FAR 52.236-8, Apr 1984)

The Government may undertake or award other contracts for additional work at or near the site of the work under this contract. The Contractor shall fully cooperate with the other contractors and with Government employees and shall carefully adapt scheduling and performing the work under this contract to accommodate the additional work, heeding any direction that may be provided by the Contracting Officer. The Contractor shall not commit or permit any act that will interfere with the performance of work by any other contractor or by Government employees.

54. Protection of Existing Vegetation, Structures, Equipment, Utilities, and Improvements (FAR 52.236-9, Apr 1984)

A. The Contractor shall preserve and protect all structures, equipment, and vegetation (such as trees, shrubs, and grass) on or adjacent to the work site, which are not to be removed and which do not unreasonably interfere with the work required under this contract. The Contractor shall only remove trees when specifically authorized to do so, and shall avoid damaging vegetation that will remain in place. If any limbs or branches of trees are broken during contract performance, or by the careless operation of equipment, or by workmen, the Contractor shall trim those limbs or branches with a clean cut and paint the cut with a tree-pruning compound as directed by the Contracting Officer.

B. The Contractor shall protect from damage all existing improvements and utilities (1) at or near the work site, and (2) on adjacent property of a third party, the locations of which are made known to or should be known by the Contractor. The Contractor shall repair any damage to those facilities, including those that are the property of a third party, resulting from failure to comply with the requirements of this contract or failure to exercise reasonable care in performing the work. If the Contractor fails or refuses to repair the damage promptly, the Contracting Officer may have the necessary work performed and charge the cost to the Contractor.

55. Operations and Storage Areas (FAR 52.236-10, Apr 1984)

A. The Contractor shall confine all operations (including storage of materials) on Government premises to areas authorized or approved by the Contracting Officer. The Contractor shall hold and save the Government, its officers and agents, free and harmless from liability of any nature occasioned by the Contractor's performance.

B. Temporary buildings (*e.g.,* storage sheds, shops, offices) and utilities may be erected by the Contractor only with the approval of the Contracting Officer and shall be built with labor and materials furnished by the Contractor without expense to the Government. The temporary buildings and utilities shall remain the property of the Contractor and shall be removed by the Contractor at its expense upon completion of the work. With the written consent of the Contracting Officer, the buildings and utilities may be abandoned and need not be removed.

C. The Contractor shall, under regulations prescribed by the Contracting Officer, use only established roadways, or use temporary roadways constructed by the Contractor when and as authorized by the Contracting Officer. When materials are transported in prosecuting the work, vehicles shall not be loaded beyond the loading capacity recommended by the manufacturer of the vehicle or prescribed by any Federal, State, or local law or regulation. When it is necessary to cross curbs or sidewalks, the Contractor shall protect them from damage. The Contractor shall repair or pay for the repair of any damaged curbs, sidewalks, or roads.

56. Use and Possession Prior to Completion (FAR 52.236-11, Apr 1984)

A. The Government shall have the right to take possession of or use any completed or partially completed part of the work. Before taking possession of or using any work, the Contracting Officer shall furnish the Contractor a list of items of work remaining to be performed or corrected on those portions of the work that the Government intends to take possession of or use. However, failure of the Contracting Officer to list any item of work shall not relieve the Contractor of responsibility for complying with the terms of the contract. The Government's possession or use shall not be deemed an acceptance of any work under the contract.

B. While the Government has such possession or use, the Contractor shall be relieved of the responsibility for the loss of or damage to the work resulting from the Government's possession or use, notwithstanding the terms of the clause in this contract entitled "Permits and Responsibilities." If prior possession or use by the Government delays the progress of the work or causes additional expense to the Contractor, an equitable adjustment shall be made in the contract price or the time of completion, and the contract shall be modified in writing accordingly.

57. Cleaning Up (FAR 52.236-12Apr 1984)
The Contractor shall at all times keep the work area, including storage areas, free from accumulations of waste materials. Before completing the work, the Contractor shall remove from the work and premises any rubbish, tools, scaffolding, equipment, and materials that are not the property of the Government. Upon completing the work, the Contractor shall leave the work area in a clean, neat, and orderly condition satisfactory to the Contracting Officer.

58. Availability and Use of Utility Services (FAR 52.236-14, Apr 1984)

A. The Government shall make all reasonably required amounts of utilities available to the Contractor from existing outlets and supplies, as specified in the contract. Unless otherwise provided in the contract, the amount of each utility service consumed shall be charged to or paid for by the Contractor at prevailing rates charged to the Government or, where the utility is produced by the Government, at reasonable rates determined by the Contracting Officer. The Contractor shall carefully conserve any utilities furnished without charge.

B. The Contractor, at its expense and in a workmanlike manner satisfactory to the Contracting Officer, shall install and maintain all necessary temporary connections and distribution lines, and all meters required to measure the amount of each utility used for the purpose of determining charges. Before final acceptance of the work by the Government, the Contractor shall remove all the temporary connections, distribution lines, meters, and associated paraphernalia.

59. Schedules for Construction Contracts (FAR 52.236-15, Apr 1984)

A. The Contractor shall, within five days after the work commences on the contract or another period of time determined by the Contracting Officer, prepare and submit to the Contracting Officer for approval three copies of a practicable schedule showing the order in which the Contractor proposes to perform the work, and the dates on which the Contractor contemplates starting and completing the several salient features of the work (including acquiring materials, plant, and equipment). The schedule shall be in the form of a progress chart of suitable scale to indicate appropriately the percentage of work scheduled for completion by any given date during the period. If the Contractor fails to submit a schedule within the time prescribed, the Contracting Officer may withhold approval of progress payments until the Contractor submits the required schedule.

B. The Contractor shall enter the actual progress on the chart as directed by the Contracting Officer, and upon doing so shall immediately deliver three copies of the annotated schedule to the Contracting Officer. If, in the opinion of the Contracting Officer, the Contractor falls behind the approved schedule, the Contractor shall take steps necessary to improve its progress, including those that may be required by the Contracting Officer, without additional cost to the Government. In this circumstance, the Contracting Officer may require the Contractor to increase the number of shifts, overtime operations, days of work, and/or the amount of construction plant, and to submit for approval any supplementary schedule or schedules in chart form as the Contracting Officer deems necessary to demonstrate how the approved rate of progress will be regained.

C. Failure of the Contractor to comply with the requirements of the Contracting Officer under this clause shall be grounds for a determination by the Contracting Officer that the Contractor is not prosecuting the work with sufficient diligence to ensure completion within the time specified in the contract. Upon making this determination, the Contracting Officer may terminate the Contractor's right to proceed with the work, or any separable part of it, in accordance with the default terms of this contract.

60. Layout of Work (FAR 52.236-17, Apr 1984)

The Contractor shall lay out its work from Government established base lines and bench marks indicated on the drawings, and shall be responsible for all measurements in connection with the layout. The Contractor shall furnish, at its own expense, all stakes, templates, platforms, equipment, tools, materials, and labor required to lay out any part of the work. The Contractor shall be responsible for executing the work to the lines and grades that may be established or indicated by the Contracting Officer. The Contractor shall also be responsible for maintaining and preserving all stakes and other marks established by the Contracting Officer until authorized to remove them. If such marks are destroyed by the Contractor or through its negligence before their removal is authorized, the Contracting Officer may replace them and deduct the expense of the replacement from any amounts due or to become due to the Contractor.

61. Organization and Direction of the Work (FAR 52.236-19, Apr 1984)

A. When this contract is executed, the Contractor shall submit to the Contracting Officer a chart showing the general executive and administrative organization, the personnel to be employed in connection with the work under this contract, and their respective duties. The Contractor shall keep the data furnished current by supplementing it as additional information becomes available.

B. Work performance under this contract shall be under the full-time resident direction of (1) the Contractor, if the Contractor is an individual; (2) one or more principal partners, if the Contractor is a partnership; or (3) one or more senior officers, if Contractor is a corporation, association, or similar legal entity. However, if the Contracting Officer approves, the Contractor may be represented in the direction of the work by a specific person or persons holding positions other than those identified in this paragraph.

62. Specifications and Drawings for Construction (FAR 52.236-21, Feb 1997)

A. The Contractor shall keep on the work site a copy of the drawings and specifications and shall at all times give the Contracting Officer access thereto. Anything mentioned in the specifications and not shown on the drawings, or shown on the drawings and not mentioned in the specifications, shall be of like effect as if shown or mentioned in both. In case of difference between drawings and specifications, the specifications shall govern. In case of discrepancy in the figures, in the drawings, or in the specifications,

the matter shall be promptly submitted to the Contracting Officer, who shall promptly make a determination in writing. Any adjustment by the Contractor without such a determination shall be at its own risk and expense. The Contracting Officer shall furnish from time to time such detailed drawings and other information as considered necessary, unless otherwise provided.

B. Wherever in the specifications or upon the drawings the words "directed," "required," "ordered," "designated," "prescribed," or words of like import are used, it shall be understood that the "direction," "requirement," "order," "designation," or "prescription," of the Contracting Officer is intended and similarly the words "approved," "acceptable," "satisfactory," or words of like import shall mean "approved by," or "acceptable to," or "satisfactory to" the Contracting Officer, unless otherwise expressly stated.

C. Where "as shown," "as indicated," "as detailed," or words of similar import are used, it shall be understood that the reference is made to the drawings accompanying this contract unless stated otherwise. The word "provided" as used herein shall be understood to mean "provide complete in place," that is "furnished and installed."

D. Shop drawings means drawings, submitted to the Government by the Contractor, subcontractor, or any lower tier subcontractor pursuant to a construction contract, showing in detail (1) the proposed fabrication and assembly of structural elements, and (2) the installation (*i.e.,* fit, and attachment details) of materials or equipment. It includes drawings, diagrams, layouts, schematics, descriptive literature, illustrations, schedules, performance and test data, and similar materials furnished by the contractor to explain in detail specific portions of the work required by the contract. The Government may duplicate, use, and disclose in any manner and for any purpose shop drawings delivered under this contract.

E. If this contract requires shop drawings, the Contractor shall coordinate all such drawings, and review them for accuracy, completeness, and compliance with contract requirements and shall indicate its approval thereon as evidence of such coordination and review. Shop drawings submitted to the Contracting Officer without evidence of the Contractor's approval may be returned for resubmission. The Contracting Officer will indicate an approval or disapproval of the shop drawings and if not approved as submitted shall indicate the Government's reasons therefor. Any work done before such approval shall be at the Contractor's risk. Approval by the Contracting Officer shall not relieve the Contractor from responsibility for any errors or omissions in such drawings, nor from responsibility for complying with the requirements of this contract, except with respect to variations described and approved in accordance with (f) of this clause.

F. If shop drawings show variations from the contract requirements, the Contractor shall describe such variations in writing, separate from the drawings, at the time of submission. If the Contracting Officer approves any such variation, the Contracting Officer shall issue an appropriate contract modification, except that, if the variation is minor or does not involve a change in price or in time of performance, a modification need not be issued.

G. The Contractor shall submit to the Contracting Officer for approval four copies (unless otherwise indicated) of all shop drawings as called for under the various headings of these specifications. Three sets (unless otherwise indicated) of all shop drawings, will be retained by the Contracting Officer and one set will be returned to the Contractor. Upon completing the work under this contract, the Contractor shall furnish a complete set of all shop drawings as finally approved. These drawings shall show all changes and revisions made up to the time the equipment is completed and accepted.

63. Back-Charges

A. When costs are sustained by Battelle or the Government as a result of Contractor failure in whole or in part to execute its responsibility under the terms of this Agreement, such costs are considered the responsibility of the Contractor and will be "back-charged." Contractor actions having potential to result in back-charges include:

1. Environmental, safety, health, or quality assurance violations;
2. Rework necessary to meet Contract requirements;
3. Support of Contractor's recovery schedule;
4. Inspections by Battelle not performed, as scheduled, due to incomplete or inadequate status of the work for which Contractor is at fault;
5. Inspections that must be repeated by Battelle due to errors, omissions, mismanagement or any fault of Contractor;
6. Vendor data review and processing as a result of re-submittals in excess of three (3), which are attributable to inadequate Contractor coordination or preparation;
7. Contractor's failure to restore all Battelle and/or Government-owned property, facilities, utilities, or systems, including replacement of survey stakes, to "like-for-like" condition after use or damage by Contractor;
8. Contractor's failure to adequately repair and/or replace property of a third party damaged by Subcontractor;
9. Subcontractor's failure to maintain the cleanliness and orderly arrangement of the work site during construction and at final acceptance, within reason, to the satisfaction of Contractor;
10. Subcontractor's failure to return or transfer to another project all security badges will result in a charge to the Subcontractor in the amount of $250.00 per badge; and
11. Hazardous or environmentally detrimental spills caused by Subcontractor with clean-up performed by Contractor will be charged to Subcontractor.

B. Notification

Upon identification of an actual or anticipated back-charge, Battelle will provide Contractor a written notice which shall describe the work to be performed, the schedule for performance, and the cost to be charged the Contractor. The cost may include:

1. actual labor cost,
2. actual material cost including transportation, and
3. taxes, levies, duties and assessments.

C. Contractor Acceptance

Contractor is required to accept the back-charge or re-perform work at Contractor's cost. In the event Contractor refuses to accept or agrees to performance of the work within 24 hours after receipt of Battelle's notice, Battelle may elect to proceed with the back-charge work and withhold (set-off) the cost from Contractor's payment. Battelle has the right to set-off such cost against any amount payable to the Contractor whether or not in connection with this Agreement.

64. Vendor Data Requirements

A. Contractor shall furnish to Battelle copies of required data for disposition sufficiently in advance of the date that the material/equipment is required to be installed to meet the accepted construction schedule. The Vendor Data Schedule (VDS) (also called a “submittal log”) summarizes the submittal requirements of the Subcontract and generally specifies the timing for each required submittal. Vendor data for all material and equipment requiring a disposition shall be submitted, reviewed, assigned a disposition code by Battelle and returned to Contractor.

B. Contractor shall perform no work for which the vendor data has not been reviewed and dispositioned. Any delay caused by Contractor's failure to submit vendor data in a timely manner for Battelle review will not be excusable or compensable. If submitted vendor data items are unacceptable, no excusable delay shall accrue there from, regardless of the number of re-submittals made by Contractor or lower- tiers.

C. Battelle’s vendor data disposition will not affect or relieve Contractor from responsibility for performance of work in compliance with the Contract. Vendor data causing any change to design details, layouts, calculations, analyses, test methods, procedures or any other Contract requirement shall be submitted with a written description of the affected change.

D. Contractor shall submit, concurrent with each invoice, an updated Construction Vendor Data Submittal Log (CVDSL). Failure to submit the CVDSL may result in withholding of payment until CVDSL receipt. Information provided on the CVDSL shall correlate with Contractor’s accepted construction schedule to assure prosecution of the work in accordance with the said construction schedule. The CVDSL shall clearly indicate expected or actual submittal dates and the disposition status of all submitted data.

E. Substitutions require Battelle approval. Refer to the clause title “Brand Name or Equal.”

F. Samples.

1. When samples are required, they shall be furnished at Contractor’s expense in accordance with the clause entitled "Material and Workmanship." Samples shall be submitted within the time specified, or if no time is specified, within a reasonable time before use to permit inspection and testing. Samples shall be shipped prepaid, delivered as directed by Battelle, and shall be properly marked to show the name of the material, trademark of manufacturer, place of origin, number and name of work where the material represented by the sample will be used, and the name of the Contractor submitting the sample.

2. Samples not subject to destructive testing may be retained by Battelle until completion of the construction. If requested in writing by the Contractor at the time of submission, samples will be returned at Contractor’s expense upon completion of the construction. Failure of any samples to pass specified requirements will be sufficient cause for refusal to consider further any samples from the same manufacturer whose materials failed to pass testing requirements.

65. Cooperation with Others

A. Contractor may undertake or award other subcontracts at or near the site of the work under the Subcontract. Subcontractor shall fully cooperate with the other Subcontractors and with Contractor employees and shall carefully adapt scheduling and performing the work under the Subcontract to accommodate the work by others, heeding any direction that may be provided by Contractor. Subcontractor shall not commit or permit any act that shall interfere with the performance of work by any other Subcontractor or Contractor employees.

B. Concurrent Work and Interface Responsibilities

1. When portions of the construction work under the Subcontract are performed near active operating areas, Subcontractor shall plan its construction work so as not to interfere with the operation of these facilities and shall maintain free and clear access to same for routine operational and maintenance activities performed by Contractor.

2. In addition, Subcontractor shall carefully coordinate all construction activities with Contractor so as to avoid conflicts and unnecessary delays in construction. Except for authorized shutdowns for the tie-in of newly constructed facilities, construction activities shall not disrupt normal operation of existing plant facilities.

LABOR STANDARDS

66. Davis-Bacon Act (FAR 52.222-6, July 2005)

A. Definition.—“Site of the work”—

1. Means—

(i). The primary site of the work. The physical place or places where the construction called for in the contract will remain when work on it is completed; and

(ii). The secondary site of the work, if any. Any other site where a significant portion of the building or work is constructed, provided that such site is—

a. Located in the United States; and

b. Established specifically for the performance of the contract or project;

2. Except as provided in paragraph (3) of this definition, includes any fabrication plants, mobile factories, batch plants, borrow pits, job headquarters, tool yards, etc., provided—

(i). They are dedicated exclusively, or nearly so, to performance of the contract or project; and

(ii). They are adjacent or virtually adjacent to the "primary site of the work" as defined in paragraph (a)(1)(i), or the "secondary site of the work" as defined in paragraph (a)(1)(ii) of this definition;

3. Does not include permanent home offices, branch plant establishments, fabrication plants, or tool yards of a Contractor or subcontractor whose locations and continuance in operation are determined wholly without regard to a particular Federal contract or project. In addition, fabrication plants, batch plants, borrow pits, job headquarters, yards, etc., of a commercial or material supplier which are established by a supplier of materials for the project before opening of bids and not on the Project site, are not included in the "site of the work." Such permanent, previously established facilities are not a part of the "site of the work" even if the operations for a period of time may be dedicated exclusively or nearly so, to the performance of a contract.

B. (1) All laborers and mechanics employed or working upon the site of the work will be paid unconditionally and not less often than once a week, and without subsequent deduction or rebate on any account (except such payroll deductions as are permitted by regulations issued by the Secretary of Labor under the Copeland Act (29 CFR part 3)), the full amount of wages and bona fide fringe benefits (or cash equivalents thereof) due at time of payment computed at rates not less than those contained in the wage determination of the Secretary of Labor which is attached hereto and made a part hereof, or as may be incorporated for a secondary site of the work, regardless of any contractual relationship which may be alleged to exist between the Contractor and such laborers and mechanics. Any wage determination incorporated for a secondary site of the work shall be effective from the first day on which work under the contract was performed at that site and shall be incorporated without any adjustment in contract price or estimated cost. Laborers employed by the construction Contractor or construction subcontractor that are transporting portions of the building or work between the secondary site of the work and the primary site of the work shall be paid in accordance with the wage determination applicable to the primary site of the work.

(2) Contributions made or costs reasonably anticipated for bona fide fringe benefits under section 1(b)(2) of the Davis-Bacon Act on behalf of laborers or mechanics are considered wages paid to such laborers or mechanics, subject to the provisions of paragraph (e) of this clause; also, regular contributions made or costs incurred for more than a weekly period (but not less often than quarterly) under plans, funds, or programs which cover the particular weekly period, are deemed to be constructively made or incurred during such period.

(3) Such laborers and mechanics shall be paid not less than the appropriate wage rate and fringe benefits in the wage determination for the classification of work actually performed, without regard to skill, except as provided in the clause entitled Apprentices and Trainees. Laborers or mechanics performing work in more than one classification may be compensated at the rate specified for each classification for the time actually worked therein; provided that the employer's payroll records accurately set forth the time spent in each classification in which work is performed.

(4) The wage determination (including any additional classifications and wage rates conformed under paragraph (c) of this clause) and the Davis-Bacon poster (WH-1321) shall be posted at all times by the Contractor and its subcontractors at the primary site of the work and the secondary site of the work, if any, in a prominent and accessible place where it can be easily seen by the workers.

C. (1) The Contracting Officer shall require that any class of laborers or mechanics which is not listed in the wage determination and which is to be employed under the contract shall be classified in conformance with the wage determination. The Contracting Officer shall approve an additional classification and wage rate and fringe benefits therefor only when all the following criteria have been met:

(i). The work to be performed by the classification requested is not performed by a classification in the wage determination.

(ii). The classification is utilized in the area by the construction industry.

(iii). The proposed wage rate, including any bona fide fringe benefits, bears a reasonable relationship to the wage rates contained in the wage determination.

(2) If the Contractor and the laborers and mechanics to be employed in the classification (if known), or their representatives, and the Contracting Officer agree on the classification and wage rate (including the amount designated for fringe benefits, where appropriate), a report of the action taken shall be sent by the Contracting Officer to the Administrator of the:

Wage and Hour Division
Employment Standards Administration
U.S. Department of Labor
Washington, DC 20210

The Administrator or an authorized representative will approve, modify, or disapprove every additional classification action within 30 days of receipt and so advise the Contracting Officer or will notify the Contracting Officer within the 30-day period that additional time is necessary.

(3) In the event the Contractor, the laborers or mechanics to be employed in the classification, or

their representatives, and the Contracting Officer do not agree on the proposed classification and wage rate (including the amount designated for fringe benefits, where appropriate), the Contracting Officer shall refer the questions, including the views of all interested parties and the recommendation of the Contracting Officer, to the Administrator of the Wage and Hour Division for determination. The Administrator, or an authorized representative, will issue a determination within 30 days of receipt and so advise the Contracting Officer or will notify the Contracting Officer within the 30-day period that additional time is necessary.

(4) The wage rate (including fringe benefits, where appropriate) determined pursuant to paragraphs (c)(2) and (c)(3) of this clause shall be paid to all workers performing work in the classification under this contract from the first day on which work is performed in the classification.

D. Whenever the minimum wage rate prescribed in the contract for a class of laborers or mechanics includes a fringe benefit which is not expressed as an hourly rate, the Contractor shall either pay the benefit as stated in the wage determination or shall pay another bona fide fringe benefit or an hourly cash equivalent thereof.

E. If the Contractor does not make payments to a trustee or other third person, the Contractor may consider as part of the wages of any laborer or mechanic the amount of any costs reasonably anticipated in providing bona fide fringe benefits under a plan or program; provided, That the Secretary of Labor has found, upon the written request of the Contractor, that the applicable standards of the Davis-Bacon Act have been met. The Secretary of Labor may require the Contractor to set aside in a separate account assets for the meeting of obligations under the plan or program.

67. Withholding of Funds (FAR 52.222-7, Feb 1988)

The Contracting Officer shall, upon his or her own action or upon written request of an authorized representative of the Department of Labor, withhold or cause to be withheld from the Contractor under this contract or any other Federal contract with the same Prime Contractor, or any other federally assisted contract subject to Davis-Bacon prevailing wage requirements, which is held by the same Prime Contractor, so much of the accrued payments or advances as may be considered necessary to pay laborers and mechanics, including apprentices, trainees, and helpers, employed by the Contractor or any subcontractor the full amount of wages required by the contract. In the event of failure to pay any laborer or mechanic, including any apprentice, trainee, or helper, employed or working on the site of the work, all or part of the wages required by the contract, the Contracting Officer may, after written notice to the Contractor, take such action as may be necessary to cause the suspension of any further payment, advance, or guarantee of funds until such violations have ceased.

68. Payrolls and Basic Records (FAR 52.222-8, June 2010)

A. Payrolls and basic records relating thereto shall be maintained by the Contractor during the course of the work and preserved for a period of 3 years thereafter for all laborers and mechanics working at the site of the work. Such records shall contain the name, address, and social security number of each such worker, his or her correct classification, hourly rates of wages paid (including rates of contributions or costs anticipated for bona fide fringe benefits or cash equivalents thereof of the types described in section 1(b)(2)(B) of the Davis-Bacon Act), daily and weekly number of hours worked, deductions made, and actual wages paid. Whenever the Secretary of Labor has found, under paragraph (d) of the clause entitled Davis-Bacon Act, that the wages of any laborer or mechanic include the amount of any costs reasonably anticipated in providing benefits under a plan or program described in section 1(b)(2)(B) of the Davis-Bacon Act, the Contractor shall maintain records which show that the commitment to provide such benefits is enforceable, that the plan or program is financially responsible, and that the plan or program has been communicated in writing to the laborers or mechanics affected, and records which show the costs anticipated or the actual cost incurred in providing such benefits. Contractors employing apprentices or trainees under approved programs shall maintain written evidence of the registration of apprenticeship programs and certification of trainee programs, the registration of the apprentices and trainees, and the ratios and wage rates prescribed in the applicable programs.

B. (1) The Contractor shall submit weekly for each week in which any contract work is performed a copy of all payrolls to the Contracting Officer. The payrolls submitted shall set out accurately and completely all of the information required to be maintained under paragraph (a) of this clause, except that full social security numbers and home addresses shall not be included on weekly transmittals. Instead the payrolls shall only need to include an individually identifying number for each employee (e.g., the last four digits of the employee's social security number). The required weekly payroll information may be submitted in any form desired. Optional Form WH-347 is available for this purpose and may be obtained from the U.S. Department of Labor Wage and Hour Division website at http://www.dol.gov/whd/forms/wh347.pdf. The Prime Contractor is responsible for the submission of copies of payrolls by all subcontractors. Contractors and subcontractors shall maintain the full social security number and current address of each covered worker, and shall provide them upon request to the Contracting Officer, the Contractor, or the Wage and Hour Division of the Department of Labor for purposes of an investigation or audit of compliance with prevailing wage requirements. It is not a violation of this section for a Prime Contractor to require a subcontractor to provide addresses and social security numbers to the Prime Contractor for its own records, without weekly submission to the Contracting Officer.

2. Each payroll submitted shall be accompanied by a "Statement of Compliance," signed by the Contractor or subcontractor or his or her agent who pays or supervises the payment of the persons employed under the contract and shall certify—

(i). That the payroll for the payroll period contains the information required to be

maintained under paragraph (a) of this clause and that such information is correct and complete;

(ii). That each laborer or mechanic (including each helper, apprentice, and trainee) employed on the contract during the payroll period has been paid the full weekly wages earned, without rebate, either directly or indirectly, and that no deductions have been made either directly or indirectly from the full wages earned, other than permissible deductions as set forth in the Regulations, 29 CFR Part 3; and

(iii). That each laborer or mechanic has been paid not less than the applicable wage rates and fringe benefits or cash equivalents for the classification of work performed, as specified in the applicable wage determination incorporated into the contract.

3. The weekly submission of a properly executed certification set forth on the reverse side of Optional Form WH-347 shall satisfy the requirement for submission of the "Statement of Compliance" required by paragraph (b)(2) of this clause.

4. The falsification of any of the certifications in this clause may subject the Contractor or subcontractor to civil or criminal prosecution under Section 1001 of Title 18 and Section 3729 of Title 31 of the United States Code.

C. The Contractor or subcontractor shall make the records required under paragraph (a) of this clause available for inspection, copying, or transcription by the Contracting Officer or authorized representatives of the Contracting Officer or the Department of Labor. The Contractor or subcontractor shall permit the Contracting Officer or representatives of the Contracting Officer or the Department of Labor to interview employees during working hours on the job. If the Contractor or subcontractor fails to submit required records or to make them available, the Contracting Officer may, after written notice to the Contractor, take such action as may be necessary to cause the suspension of any further payment. Furthermore, failure to submit the required records upon request or to make such records available may be grounds for debarment action pursuant to 29 CFR 5.12.

69. Apprentices and Trainees (FAR 52.222-9, July 2005)

A. Apprentices.

1. An apprentice will be permitted to work at less than the predetermined rate for the work performed when employed—

A. Pursuant to and individually registered in a bona fide apprenticeship program registered with the U.S. Department of Labor, Employment and Training Administration, Office of Apprenticeship Training, Employer, and Labor Services (OATELS) or with a State Apprenticeship Agency recognized by the OATELS; or

B. In the first 90 days of probationary employment as an apprentice in such an apprenticeship program, even though not individually registered in the program, if certified by the OATELS or a State Apprenticeship Agency (where appropriate) to be eligible for probationary employment as an apprentice.

2. The allowable ratio of apprentices to journeymen on the job site in any craft classification shall not be greater than the ratio permitted to the Contractor as to the entire work force under the registered program.

3. Any worker listed on a payroll at an apprentice wage rate, who is not registered or otherwise employed as stated in paragraph (a)(1) of this clause, shall be paid not less than the applicable wage determination for the classification of work actually performed. In addition, any apprentice performing work on the job site in excess of the ratio permitted under the registered program shall be paid not less than the applicable wage rate on the wage determination for the work actually performed.

4. Where a Contractor is performing construction on a project in a locality other than that in which its program is registered, the ratios and wage rates (expressed in percentages of the journeyman's hourly rate) specified in the Contractor's or subcontractor's registered program shall be observed. Every apprentice must be paid at not less than the rate specified in the registered program for the apprentice's level of progress, expressed as a percentage of the journeyman hourly rate specified in the applicable wage determination.

5. Apprentices shall be paid fringe benefits in accordance with the provisions of the apprenticeship program. If the apprenticeship program does not specify fringe benefits, apprentices must be paid the full amount of fringe benefits listed on the wage determination for the applicable classification. If the Administrator determines that a different practice prevails for the applicable apprentice classification, fringes shall be paid in accordance with that determination.

6. In the event OATELS, or a State Apprenticeship Agency recognized by OATELS, withdraws approval of an apprenticeship program, the Contractor will no longer be permitted to utilize apprentices at less than the applicable predetermined rate for the work performed until an acceptable program is approved.

B. Trainees.

1. Except as provided in 29 CFR 5.16, trainees will not be permitted to work at less than the predetermined rate for the work performed unless they are employed pursuant to and individually registered in a program which has received prior approval, evidenced by formal certification by the U.S. Department of Labor, Employment and Training Administration, Office of Apprenticeship Training, Employer, and Labor Services (OATELS). The ratio of trainees to journeymen on the job site shall not be greater

than permitted under the plan approved by OATELS.

2. Every trainee must be paid at not less than the rate specified in the approved program for the trainee's level of progress, expressed as a percentage of the journeyman hourly rate specified in the applicable wage determination. Trainees shall be paid fringe benefits in accordance with the provisions of the trainee program. If the trainee program does not mention fringe benefits, trainees shall be paid the full amount of fringe benefits listed in the wage determination unless the Administrator of the Wage and Hour Division determines that there is an apprenticeship program associated with the corresponding journeyman wage rate in the wage determination which provides for less than full fringe benefits for apprentices. Any employee listed on the payroll at a trainee rate who is not registered and participating in a training plan approved by the OATELS shall be paid not less than the applicable wage rate in the wage determination for the classification of work actually performed. In addition, any trainee performing work on the job site in excess of the ratio permitted under the registered program shall be paid not less than the applicable wage rate in the wage determination for the work actually performed.

3. In the event OATELS withdraws approval of a training program, the Contractor will no longer be permitted to utilize trainees at less than the applicable predetermined rate for the work performed until an acceptable program is approved.

C. Equal employment opportunity. The utilization of apprentices, trainees, and journeymen under this clause shall be in conformity with the equal employment opportunity requirements of Executive Order 11246, as amended, and 29 CFR Part 30.

70. Compliance with Copeland Act Requirements (FAR 52.222-10, Feb 1988)

The Contractor shall comply with the requirements of 29 CFR Part 3, which are hereby incorporated by reference in this contract.

71. Subcontracts (Labor Standards) (FAR 52.222-11, July 2005)

A. Definition. "Construction, alteration or repair," as used in this clause, means all types of work done by laborers and mechanics employed by the construction Contractor or construction subcontractor on a particular building or work at the site thereof, including without limitation—

1. Altering, remodeling, installation (if appropriate) on the site of the work of items fabricated off-site;

2. Painting and decorating;

3. Manufacturing or furnishing of materials, articles, supplies, or equipment on the site of the building or work;

4. Transportation of materials and supplies between the site of the work within the meaning of paragraphs (a)(1)(i) and (ii) of the "site of the work" as defined in the FAR clause at 52.222-6, Davis-Bacon Act of this contract, and a facility which is dedicated to the construction of the building or work and is deemed part of the site of the work within the meaning of paragraph (2) of the "site of work" definition; and

5. Transportation of portions of the building or work between a secondary site where a significant portion of the building or work is constructed, which is part of the "site of the work" definition in paragraph (a)(1)(ii) of the FAR clause at 52.222-6, Davis-Bacon Act, and the physical place or places where the building or work will remain (paragraph (a)(1)(i) of the FAR clause at 52.222-6, in the "site of the work" definition).

B. The Contractor shall insert in any subcontracts for construction, alterations and repairs within the United States the clauses entitled—

1. Davis-Bacon Act;

2. Contract Work Hours and Safety Standards Act—Overtime Compensation (if the clause is included in this contract);

3. Apprentices and Trainees;

4. Payrolls and Basic Records;

5. Compliance with Copeland Act Requirements;

6. Withholding of Funds;

7. Subcontracts (Labor Standards);

8. Contract Termination—Debarment;

9. Disputes Concerning Labor Standards;

10. Compliance with Davis-Bacon and Related Act Regulations; and

11. Certification of Eligibility.

C. The prime Contractor shall be responsible for compliance by any subcontractor or lower tier subcontractor performing construction within the United States with all the contract clauses cited in paragraph (b).

D. (1) Within 14 days after award of the contract, the Contractor shall deliver to the Contracting Officer a completed Standard Form (SF) 1413, Statement and Acknowledgment, for each subcontract for construction within the United States, including the subcontractor's signed and dated acknowledgment that the clauses set forth in paragraph (b) of this clause have been included in the subcontract.

2. Within 14 days after the award of any subsequently awarded subcontract the Contractor shall deliver to the Contracting Officer an updated completed SF 1413 for such additional subcontract.

E. The Contractor shall insert the substance of this clause, including this paragraph (e) in all subcontracts for construction within the United States.

72. Contract Termination—Debarment (FAR 52.222-12, Feb 1988)

A breach of the contract clauses entitled Davis-Bacon Act, Contract Work Hours and Safety Standards Act—Overtime Compensation, Apprentices and Trainees, Payrolls and

Basic Records, Compliance with Copeland Act Requirements, Subcontracts (Labor Standards), Compliance with Davis-Bacon and Related Act Regulations, or Certification of Eligibility may be grounds for termination of the contract, and for debarment as a Contractor and subcontractor as provided in 29 CFR 5.12.

73. Compliance with Davis-Bacon and Related Act Regulations (FAR 52.222-13, Feb 1988)

All rulings and interpretations of the Davis-Bacon and Related Acts contained in 29 CFR parts 1, 3, and 5 are hereby incorporated by reference in this contract.

74. Disputes Concerning Labor Standards (FAR 52.222-14, Feb 1988)

The United States Department of Labor has set forth in 29 CFR parts 5, 6, and 7 procedures for resolving disputes concerning labor standards requirements. Such disputes shall be resolved in accordance with those procedures and not the Disputes clause of this contract. Disputes within the meaning of this clause include disputes between the Contractor (or any of its subcontractors) and the contracting agency, the U.S. Department of Labor, or the employees or their representatives.

75. Notice of Labor Disputes (cl. 359 - Feb 1997)

If the Contractor has knowledge that any actual or potential labor dispute is delaying or threatens to delay the timely performance of this contract, the Contractor shall immediately give notice, including all relevant information, to the Battelle Contracts Representative.

76. Certification of Eligibility (FAR 52.222-15, Feb 1988)

A. By entering into this contract, the Contractor certifies that neither it (nor he or she) nor any person or firm who has an interest in the Contractor's firm is a person or firm ineligible to be awarded Government contracts by virtue of section 3(a) of the Davis-Bacon Act or 29 CFR 5.12(a)(1).

B. No part of this contract shall be subcontracted to any person or firm ineligible for award of a Government contract by virtue of section 3(a) of the Davis-Bacon Act or 29 CFR 5.12(a)(1).

C. The penalty for making false statements is prescribed in the U.S. Criminal Code, 18 U.S.C. 1001.

77. Compliance with Contractor Code of Business Ethics and Conduct (FAR 52.203-13)

The Contractor shall comply with the requirements of FAR 52.203-13, which are hereby incorporated by reference in this contract. This clause applies if the contract value exceeds $5,000,000 and the performance period is 120 days or more.

CLAUSES INCORPORATED BY REFERENCE

This Contract incorporates one or more FAR and DEAR provisions/clauses by reference with the same force and effect as if they were given in full text. Such provisions/clauses are identified below and elsewhere in this Contract by their title, effective date, and reference where they appear in the FAR and/or DEAR. The FAR and DEAR may be obtained from the Superintendent of Documents, US Government Printing Office and is available for viewing/downloading at http://www.acquisition.gov/far/ and http://farsite.hill.af.mil.

A. Applicable to all Contracts:

1. FAR 52.223-3, Hazardous Material Identification and Material Safety Data (JAN 1997) (Alt I, JUL 1995)
2. DEAR 952.211-71, Priorities and Allocations (APR 2008)
3. FAR 52.204-9 Personal Identity Verification of Contractor Personnel (JAN 2011)
4. FAR 52.227-4, Patent Indemnity—Construction Contracts (DEC 2007)
5. FAR 52.247-64, Preference For Privately Owned U.S.-Flag Commercial Vessels (FEB 2006)
6. DEAR 952.204-71 Sensitive Foreign Nations Control (MAR 2011)
7. DEAR 952.217-70 Acquisition of Real Property (Apr 1984)
8. FAR 52.232-39 Unenforceability of Unauthorized Obligations (Jun 2013)

B. Applicable to Subcontracts Under This Contract For Commercial Items:

1. FAR 52.244-6, Subcontracts For Commercial Items (DEC 2010)
2. FAR 52.222-50 Combating Trafficking in Persons (FEB 2009)
3. FAR 52.223-15 Energy Efficiency in Energy-Consuming Products (DEC 2007)

C. Applicable if Contract identifies specific items to be accorded duty-free entry into a customs territory of the United States. Also applicable where other foreign supplies in excess of $15,000 may be imported to a customs territory of the United States.

1. FAR 52.225-8, Duty-Free Entry (OCT 2010)

D. Applicable if Contract exceeds $2,500:

1. FAR 52.225-9, Buy American Act—Construction Materials (FEB 2009)

   (Note: The fill-in for paragraph (b) (2) of this clause is "None.")

2. FAR 52.225-13, Restrictions on Certain Foreign Purchases (JUNE 2008)

E. Applicable if Contract Exceeds $3,000:

1. FAR 52.222-54, Employment Eligibility Verification (Jan 2009) – applies for (a) commercial or noncommercial services (except for commercial services that are part of the purchase of a COTS item (or an item that would be a COTS item, but for minor modifications), performed by the COTS provider, and are normally provided for that COTS item) and (b) construction services; only applies for work performed in the United States.

F. Applicable if Contract exceeds $10,000:

1. FAR 52.222-21, Prohibition of Segregated Facilities (FEB 1999)
2. FAR 52.222-23, Notice of Requirement for

Affirmative Action to Ensure Equal Employment Opportunity for Construction (FEB 1999) (The term "Covered Area" referred to in this FAR clause includes the Missouri Counties of Clay, Platte, Jackson, Ray, and Cass; and the Kansas Counties of Wyandotte and Johnson. Goals for minority and female participation in each trade are 12.7% and 6.9%, respectively.)

3. FAR 52.222-26, Equal Opportunity (MAR 2007) - The Equal Employment Opportunity Act Poster referenced in paragraph (c)(3)of the above clause may be downloaded from the U.S. Department of Labor website at www.dol.gov/elaws/posters.htm

4. FAR 52.222-27, Affirmative Action Compliance Requirements for Construction (FEB 1999)

5. FAR 52.222-29, Notification of Visa Denial (June 2003) – *applies when the Equal Opportunity clause is used and when the work is required to be performed in a foreign country.*

G. Applicable if Contract exceeds $15,000:

1. FAR 52.222-36, Affirmative Action for Workers with Disabilities (OCT 2010)

H. Applicable if Contract exceeds $25,000:

1. FAR 52.204-10, Reporting Executive Compensation and First-Tier Subcontract Awards (Jul 2013) – *Contractor agrees to provide such information to Battelle or to maintain it for a period of not less than three years following contract completion and to provide it to the Government upon request.*

I. Applicable if Contract exceeds $30,000:

1. FAR 52.209-6, Protecting the Government's Interest When Subcontracting with Contractors Debarred, Suspended, or Proposed for Debarment (Dec 2010)

J. Applicable if Contract exceeds $100,000:

1. FAR 52.222-35, Equal Opportunity for Special Disabled Veterans, Veterans of the Vietnam Era, and Other Eligible Veterans (SEP 2010)

2. FAR 52.222-37, Employment Reports on Special Disabled Veterans, Veterans of the Vietnam Era, and Other Eligible Veterans (SEP 2010)

3. DEAR 970.5227-5, Notice and Assistance Regarding Patent and Copyright Infringement (AUG 2002)

K. Applicable if Contract exceeds $150,000:

1. FAR 52.203-6, Restrictions on Subcontractor Sales to the Government (SEP 2006)

2. FAR 52.203-7, Anti-Kickback Procedures, (OCT 2010) – excluding paragraph (c)(1)

3. FAR 52.203-17, Contractor Employee Whistleblower Rights and Requirement to Inform Employees of Whistleblower Rights (SEP 2013)

4. FAR 52.219-8, Utilization of Small Business Concerns (JAN 2011)

5. FAR 52.227-1, Authorization and Consent (DEC 2007) – applies without Alternate I if this Contract is for supplies or services, including construction, architect-engineer services, and materials, supplies, models, samples, and design or testing services.

L. Applicable if Contract exceeds $100,000 and its performance involves international air transportation of personnel, including their personal effects or property.

1. FAR 52.247-63, Preference for U.S.-Flag Air Carriers (JUN 2003)

M. Applicable if Contract exceeds $150,000 unless exempt per the provisions of FAR 22.305:

1. FAR 52.222-4, Contract Work Hours and Safety Standards Act--Overtime Compensation (JUL 2005)

N. Applicable if Contractor, as a part of its' quote or proposal, submitted the certification entitled "Certification of Toxic Chemical Release Reporting," and the amount of this Contract, inclusive of option amounts, exceeds $100,000:

1. FAR 52.223-14, Toxic Chemical Release Reporting (AUG 2003)

O. Applicable If Work Is Performed On DOE Site:

1. DEAR 970.5223-1, Integration of Environment, Safety, and Health into Work Planning and Execution (DEC 2000)

2. DEAR 970.5223-4, Workplace Substance Abuse Programs at DOE Sites, (DEC 2010)

3. DEAR 952.203-70, Whistleblower Protection For Contractor Employees (DEC 2000)

P. Applicable if work is performed on DOE site or if Contractor or its Subcontractors have access to classified information:

1. DEAR 952.204-2, Security (AUG 2009)

2. DEAR 952.204-70, Classification/Declassification (SEP 1997)

3. DEAR 952.204-73, Facility Clearance (MAY 2002)

Q. Applicable if this Contract exceeds $150,000 and is for advisory and assistance services as those terms are defined at FAR 37.201:

1. DEAR 952.209-72, Organizational Conflicts of Interest, Alt. I, (AUG 2009)

R. Applicable if this Contract exceeds $500,000:

1. DEAR 952.226-74 Displaced Employee Hiring Preference (JUN 1997)

2. DEAR 970.5226-2, Workforce Restructuring Under Section 3161 of the National Defense Authorization Act for Fiscal Year 1993 (DEC 2000)

S. Applicable if this Contract exceeds $650,000:

1. FAR 52.219-9, Small Business Subcontracting Plan (JAN 2011) – applies if the Contractor is a large business concern

T. Applicable to Contracts which require printing (as that term is defined in Title I of the U.S. Government Printing Regulations):

1. DEAR 970.5208-1, Printing (DEC 2000)

U. Applicable if this Contract involves the design, development, or operation of a system of records on individuals to accomplish a DOE function per the requirements of FAR 24.1:

1. FAR 52.224-1, Privacy Act Notification (APR 1984)
2. FAR 52.224-2, Privacy Act (APR 1984)

V. Applicable if Battelle requires a Certificate of Current Cost or Pricing Data in connection with the initial award or subsequent modification of this Contract pursuant to the requirements of FAR 15.403-1 through 15.403-5:

1. FAR 52.215-10, Price Reduction for Defective Cost or Pricing Data (AUG 2011)
2. FAR 52.215-11, Price Reduction for Defective Cost or Pricing Data—Modifications (AUG 2011)
3. FAR 52.215-12, Subcontractor Cost or Pricing Data (OCT 2010)
4. FAR 52.215-13, Subcontractor Cost or Pricing Data—Modifications (OCT 2010)

W. Applicable if costs incurred are a factor in determining the amount payable to Contractor under this Contract, or if the Contractor furnished Battelle a Certificate of Current Cost or Pricing Data as specified above:

1. DEAR 970.5232-3, Accounts, Records, and Inspection (DEC 2010)

X. Applicable if Battelle furnishes Government property to the Contractor in the performance of this purchase order/Contract, including Contractor acquired property to which title vests in the government under this purchase order/Contract:

1. FAR 52.245-1, Government Property (AUG 2010)

Y. Applicable if royalties exceeding $250 were included in the price of this Contract:

1. DEAR 970.5227-8, Refund of Royalties (AUG 2002)

Z. Applicable if foreign travel is required in the performance of this Contract.

1. DEAR 952.247-70, Foreign Travel (AUG 2009)

AA. Applicable to all Contracts which include the design or operation of any plants or facilities or specially designed equipment for such plants or facilities.

1. DEAR 970.5227-1 Rights in Data – Facilities (DEC 2000) [included in Contracts for support services, involving the design or operation of any plants or facilities or specially designed equipment for such plants or facilities that are managed or operated under an M&O Contract under 48 CFR 970 with DOE.]

Environment, Safety, and Health Requirements – PNNL F&O Sponsored Work Sites (JPP/WEA/JSA) *(cl. 3113b – Feb. 2012)*

A. In performing any work under this contract on property or facilities owned or controlled by Battelle that are identified as PNNL Work Sites (hereinafter "onsite"), the Contractor shall comply with all applicable federal, state and local environment, safety, and health laws and regulations. The Contractor shall also comply with 10 CFR 851, DOE Worker Safety and Health Program, and DEAR 970.5223-1, Integration of Environment, Safety and Health (ES&H) into Work Planning and Execution (Dec. 2000). In order to comply with the requirements of 10 CFR 851 and DEAR 970.5223-1, the Contractor shall be guided by the principles set forth below.

B. The Contractor shall perform work safely and in a manner that ensures adequate protection for employees, the public, and the environment, and shall be accountable for the safe performance of work. The Contractor shall exercise a degree of care commensurate with the work and the associated hazards. The Contractor shall ensure that management of ES&H functions and activities becomes an integral but visible part of the Contractor's work planning and execution processes. The Contractor shall, in the performance of work, ensure that—

1. Line management is responsible for the protection of employees, public, and the environment. Line management includes those contractor and subcontractor employees managing and supervising employees performing work.
2. Clear and unambiguous lines of authority and responsibility for ensuring (ES&H) are established and maintained at all organizational levels.
3. Personnel possess the experience, knowledge, skills, and abilities that are necessary to discharge their responsibilities, and shall retain records respecting such competency and qualifications, making them available upon request.
4. Resources are effectively allocated to address ES&H, programmatic, and operational considerations. Protecting employees, the public, and the environment is a priority whenever activities are planned and performed.
5. Before work is performed, the associated hazards are evaluated and a set of ES&H standards and requirements are established which, if properly implemented, provide adequate assurance that employees, the public, and the environment are protected from adverse consequences.
6. Administrative and engineering controls to prevent and mitigate hazards are tailored to the work being performed and associated hazards. Emphasis should be on designing the work and/or controls to reduce or eliminate the hazards and to prevent accidents and unplanned releases and exposures.

C. The Contractor, relative to the Statement of Work and contract specifications, shall be able to demonstrate through documentation and work practices that its performance of work under this contract—

1. Fulfilled the scope of work as outlined in this contract
2. Identified and analyzed specific, task-level hazards associated with the work
3. Developed and implemented hazard controls related to the hazards
4. Allowed the performance of work within the controls
5. Provided feedback to Battelle and Contractor employees on adequacy of hazard controls

D. The Contractor shall perform work in accordance with a DOE-approved Worker Safety and Health Program (also referred to in the DEAR as a Safety Management Plan) as described below:

1. The Contractor shall demonstrate well-established safety protocols applicable to the scope of work and consistent with the required elements stated in this clause. Prior to the initiation of any onsite work, the Contractor shall either—
   a. Accept and incorporate Battelle's PNNL Contractor Environment Safety and Health Manual (http://www.pnl.gov/contracts/esh-procedures/) as its own. The Battelle Contracts Representative can provide a hard copy of the manual upon request. In those cases where the Contractor's onsite activities are limited to an office or meeting environment, with no additional or unusual hazards, the CES&H Manual requirements can be met through review of the Visitor Orientation Pamphlet, available on-line at http://www.pnl.gov/contracts/esh-procedures/.
   b. Submit its own 10 CFR 851 and DEAR 970.5223-1 compliant Worker Safety and Health Program (WSHP) document to the Battelle Contracts Representative. The Battelle Contracts Representative will coordinate the review and approval of the program document by DOE. The Contractor will be notified by the Battelle Contracts Representative of the program document's approval by DOE. Acceptance of the Contractor's program document will be at the sole discretion of DOE.
2. The Contractor will be provided a completed Job Planning Package (JPP) and Workplace Exposure Assessment (WEA) in the Invitation for Bid (IFB) or Request for Proposal (RFP). The completed JPP and WEA, which are a part of this contract, incorporate elements of effective job planning and hazard identification. Elements include identifying: the scope of work to be performed; facility operating requirements; potential hazards to Battelle and Contractor staff, the public and environment created by the work performed; hazard control methods and mitigation; and mechanisms to evaluate the adequacy of those controls. The JPP and WEA are key control processes in the safe conduct of work at Battelle. The Contractor is expected to develop their work sequence and job safety analysis (JSA) including information provided within the JPP and WEA in order to access Battelle property or facilities and initiate work.

E. The Contractor shall perform the following additional hazard identification tasks consistent with an approved WSHP:

1. The Contractor shall be responsible for identifying all potential occupational exposures that its employees and the employees of its lower-tier subcontractors will be exposed to while performing any work under this contract.

2. The Contractor shall assure that its employees and those of any lower-tiered subcontractor are medically qualified to perform work associated with any potential occupational exposures that have been identified. Medical qualification and medical surveillance programs are the sole responsibility of the Contractor. In addition, the Contractor is responsible for maintaining any records associated with the administration of these programs.
3. For each of its employees and each of its lower-tier subcontract employees that the Contractor has identified as having potential occupational exposures that require enrollment in a medical surveillance or medical qualification program, the Contractor shall provide its Occupational Medical provider with the following information:
   a. Current information about actual or potential work-related site hazards (chemical, radiological, physical, biological, or ergonomic);
   b. Employee job-task and hazard analysis information, including essential job functions;
   c. Actual or potential work-site exposures of each employee; and
   d. Personnel actions resulting in a change of job functions such that a change of hazards, or exposures results.
4. For each of its employees and each of its lower-tier subcontract employees, a copy of the exposure information provided to the Contractor's occupational medical provider shall be submitted to the Battelle Contracts Representative and approved by Battelle before any of these employees begin work under this contract.

F. The Contractor shall notify the Battelle Contracts Representative immediately of any OSHA-recordable injuries/illnesses, any "off-normal occurrences," or Government property damaged, that the Contractor determines to have occurred in the course of operations onsite and shall furnish such further information as the Battelle Contracts Representative may require. An "off-normal occurrence" is any unplanned or unexpected event, including near misses, or the discovery of a deficiency in a procedure, plan, or system that has real or potentially undesirable consequences to personnel, equipment, facilities, the environment, and/or programs.

G. The Contractor's onsite ES&H activities will be subject to review by the Technical Administrator of this contract. Other representatives of Battelle may conduct periodic inspections of the Contractor's equipment, work and storage areas for compliance with the applicable ES&H requirements. The Battelle Contracts Representative will notify the Contractor by a written Notice of Non-compliance of any observed non-compliance with applicable ES&H requirements. The Contractor shall immediately take appropriate corrective action. The Contractor shall advise the Battelle Contracts Representative, in writing, within five (5) working days of the corrective action taken on any safety non-compliance noted on the written Notice of Non-compliance. If the Contractor fails or refuses to correct the safety non-compliance, Battelle may perform, or cause to be performed, the necessary corrective work and unilaterally charge the Contractor for the cost thereof. Such charges will be deducted from payments otherwise due the Contractor under this contract.

H. The Contractor shall promptly evaluate and resolve any non-compliance with applicable ES&H requirements. If the Contractor fails to provide resolution or if, at any time, the Contractor's acts or failure to act causes substantial harm or an imminent danger to the environment, or health and safety of employees or the public, the Battelle Contracts Representative may issue an order stopping work in whole or in part and the Contractor shall be liable for the delay and any costs thereby incurred. Any stop-work order issued by Battelle under this clause (or issued by the Contractor to a subcontractor in accordance with this clause) shall be without prejudice to any other legal or contractual rights of Battelle. In the event that the Battelle Contracts Representative issues a stop-work order, an order authorizing the resumption of the work may be issued at the discretion of the Battelle Contracts Representative. The Contractor shall not be entitled to an extension of time, or additional cost or fee, or damages by reason of, or in connection with, any work stoppage ordered in accordance with this clause.

I. Employee Concerns Program
1. The Contractor, its agents, employees or subcontractors, are entitled to use the Battelle Employee Concerns Program and Hotline (509) 375-3999. The Hotline operates 24 hours per day, 7 days a week. Messages may be left anonymously, and all concerns are handled with confidentiality to the maximum extent possible. Employee concerns may also be submitted in writing to the Battelle Employee Concerns Office, Battelle, Pacific Northwest National Laboratory, P.O. Box 999, K1-42, Richland, Washington, 99352, or in person at the Staff Concerns Office, Battelle's Research Operation Building during normal business hours, Monday through Friday 7:30 a.m. to 4:30 p.m.
2. For the purpose of this document, allegations, concerns, and complaints are handled in a like manner and are referred to collectively as "employee concerns." A concern can consist of a declaration, statement, or assertion of impropriety or inadequacy on the part of one's employer or others at a DOE Site that has affected (or threatens to affect) aspects of operations, such as the environment, health, safety, quality, or security, and may include fraud, mismanagement, waste, or abuse of authority.
3. No retaliation or retribution shall be taken toward any individual as a result of filing an employee concern consistent with 10 CFR 708.

J. Civil Penalties and Indemnification
1. The 2002 Bob Stump National Defense Authorization Act amended the Atomic Energy Act by adding section 234C "Worker Health and Safety Rules for Department of Energy Nuclear Facilities." It required DOE to promulgate a worker safety and health rule, published in the Federal Register on February 9, 2006, as 10 CFR 851. It establishes worker safety and health requirements that govern the conduct of contractor activities at both nuclear and non-nuclear DOE Sites. Contractors that fail to comply with the Rule are subject to civil penalties or contract penalties.
2. The Contractor assumes full responsibility and shall indemnify, hold harmless, and defend Battelle, its directors, officers, and employees from any civil or contractual liability under section 234C of the Atomic Energy Act of 1954, as amended, or

the implementing regulations, arising out of the activities of the Contractor, its subcontractors, suppliers, agents, employees, and their officers, or directors. The Contractor's obligation to indemnify and hold harmless shall expressly include attorney fees and other reasonable costs of defending any action or proceeding instituted under section 234C or DOE's implementing regulations.

K. The Contractor is responsible for its subcontractors' compliance with the ES&H requirements of this contract. The Contractor shall include a clause substantially the same as this clause in lower-tier subcontracts involving work at on property or facilities owned or controlled by Battelle that are identified as PNNL Work Sites. Such subcontracts shall provide for the right to stop work under the conditions described herein.

Welding *(cl. QA-171 –Mar 2011)*

Welded items shall be fabricated by qualified/certified personnel utilizing qualified procedures based on contract-specified nationally recognized welding codes/standards in effect on the contract date.

The Contractor shall maintain records of welding qualifications and procedures including welder qualification/certification documentation. Welder qualification/certification shall include documented evidence of continued welding performance by welding process.

After contract award, but 15 working days prior to performing any welding, the Contractor shall deliver to Battelle for review and acceptance the following documentation:

- Procedure Qualification Record for each applicable welding process and/or reference to applicable pre-qualified procedures indicating applicable code/standard and section.
- Welding Procedure Specification for each applicable welding process.
- Welder Qualification/Certification Records for those individuals performing the welding as required by the contract.

Unless otherwise specified, the Contractor shall mail all documents required by this contract to be delivered to the Battelle Contracts Representative, Battelle, PO Box 999, Richland, WA 99352. Submission of a certification constitutes Contractor's express warranty that the identified supplies conform to all of the requirements of this contract. A document is not delivered until it is received by Battelle. Battelle shall have the right to reject, as not in conformity with the requirements of this contract, any supplies or services for which all required reports, procedures, or certifications are not delivered. The Contractor's failure to deliver such documents, or delivery of deficient documents, shall be deemed a failure to make delivery within the meaning of the default clause of this contract.

Pre-Work Evaluation Requirement: Prior to performing any welding, Battelle's Acquisition Quality Support Services must evaluate the supplier's documentation (as required above) for compliance with contractual requirements**.**

RED-LINED DRAWINGS *(cl QA-183 – April 2008)*

Prior to submission of its final payment invoice, the Contractor shall deliver to Battelle three revised copies of all Battelle furnished or Contractor-generated design drawings and specifications necessary to depict accurately all delivered supplies; provided, however, that if the supplies delivered conform exactly to all such design drawings and specifications, the Contractor shall instead so certify in writing. Such certification shall clearly specify all applicable design drawings and specifications (red-lined drawings are acceptable). Contractor's failure to deliver all required "As-Built" design drawings and specifications, or the delivery of "As-Built" design drawings and specifications that are deficient, shall be deemed a failure to make delivery within the meaning of the Default clause of this contract.

Unless otherwise specified, Contractor shall mail all documents required by this contract to be delivered to the Battelle Contracts Representative, Battelle, PO Box 999, Richland, Washington 99352. A document is not delivered until it is received by Battelle. Battelle shall have the right to reject, as not in conformity with the requirements of this contract, any supplies or services for which all required reports, procedures or certifications are not delivered. Contractor's failure to deliver such documents, or delivery of deficient documents, shall be deemed a failure to make delivery within the meaning of the Default clause of this contract.

Contractor Nonconformance Report *(cl. 360 – May 2009)*

Contractor is required to report to the Battelle Contracts Representative any nonconformance or deviation from Battelle's technical requirements. To comply with the reporting requirements the Contractor shall complete Battelle's Contractor Nonconformance Report (CNCR) which is available at www.pnl.gov/contracts/documents. The completed CNCR shall be submitted by the Contractor to the Battelle Contracts Representative to request Battelle to accept a deliverable not meeting all of Battelle's technical requirements. The decision whether to accept or reject such a request shall be within Battelle's sole discretion, and the Contractor shall not proceed in accordance with the requested deviation or present for inspection or acceptance any product produced in accordance with such deviation, unless and until Battelle's written approval on the CNCR is received by the Contractor.

Battelle's rights and remedies provided in this clause are in addition to any and all other rights and remedies that Battelle may have under Federal or State law.

Doc. #: S729087-SOW-PM-001, Rev. 0

Approved: _____ 6/26/15
Dan Ryan, Project Manager Date

Project Summary

Job Title & ESR: "EMSL Fall Protection Install" (S729087)

CWO Project Type: Fixed Price

Statement of Work: EMSL facility (3335 Innovation Blvd.) - Contractor shall furnish all the labor, supervision, sub-contractors, equipment and materials required to install 8ea. safety tie-off anchors as per this Statement of Work, General Requirements, Dwg. #: S1-201/Sht. 1/Rev. 0., Job Planning Package (JPP), Work Exposure Assessment (WEA) and other attached Contract Documents.

P.M./T.O.R: Dan Ryan (509.430.0212)

Construction Manager: Rich Nelson (509.521.6529)

Completion Date: **7/30/15**

[redacted]

[redacted]

Document No. S729087-PLAN-PM-001, Rev 0

Approved: _____ 6/26/15
Dan Ryan, Project Manager Date

General Project Requirements

"EMSL Fall Protection Install" – S729087

USE OF PREMISES & PERMITS

Work hours shall be 6:00 a.m. to 4:30 p.m., Monday through Thursday. Authorization to access the facility or perform work on site at times other than as specified shall require prior written authorization.

All personnel performing work shall complete required PNNL training and possess a picture badge issued by PNNL or a Hanford Contractor – US citizenship required. Doors shall not be left unlocked, unattended, or blocked open at any time. Doors that are alarmed or not customarily used require specific authorization for use and may require full time supervision by PNNL Security personnel while in use. Provide five (5) working days notice to arrange for Security personnel. Provide five (5) working days notice proximity badge access requests.

EMSL is a fully operational research facility. The Contractor shall take all necessary measures to limit the impact of construction and demolition activities on the occupants. Noise, dust, fumes, and vapors shall be controlled to the greatest extent practicable. Housekeeping shall be performed on an ongoing basis. Do not obstruct doorways/entrances and corridors.

Request authorization to access work areas and facility services/utilities, use storage and lay down areas, perform isolations, conduct outages, and perform work from the Construction Manager (CM). Request authorization before the end of shift for the following day's access and work requirements. Approval is obtained the following morning through the Plan of the Day (POD) meeting. Request authorization a minimum of twenty four (24) hours in advance for use of storage and lay down areas. Request authorization to perform isolations and conduct outages in writing a minimum of five (5) working days in advance.

The project Job Planning Package (JPP) & WEA (Work Exposure Assessment) identifies specific work activity permits (e.g., Confined Space, Hot Work, Blind Penetration, etc.). Contact the project CM if further definition is required.

WORK CONTROL

The work control process identifies known hazards; outlines controls to mitigate the hazards, outlines expectations for hazard controls, as well as other activity specific work performance requirements. Battelle will assist in the identification and mitigation of hazards through the PNNL Job Planning Package (JPP) & WEA (Work Exposure Assessment), Training and Permitting, but the final responsibility of hazard identification and mitigation is the responsibility of the Contractor.

Job Planning Package: PNNL will provide the Contractor with a JPP/equivalent document as part of the solicitation documents. The JPP identifies the phases of work to be performed, permits, training/qualifications, special tools or materials, pre- and post-notification requirements, pre- and post-job meetings, system/equipment configuration and verification, outages, waste disposal path, critical

(mandatory) work steps and environmental and/or worker safety hazards. The JPP will contain the following attachments; Work Place Exposure Assessment (WEA - Identifies non-radiological hazards).

Contractor to comply with all elements of the Contractor Environment Safety and Health (CESH) manual.

Contractor shall submit a Job Safety Analysis (JSA) to the project CM addressing work to be performed before commencing any work activities on Site.

QUALITY

Quality Assurance Program: Compliance with contract documents forms the Quality Assurance program for this project.

Contractor(s) must have demonstrated experience and ability to perform described work requirements. Supervision must be fully qualified to direct all project activities. Workers to be qualified and competent.

TRAINING

Include costs for course attendee's time in proposal. PNNL is responsible for initial and refresher training course fees. Contractor shall be required to pay course fees for no-shows and any retraining required as a result of failure. Classroom training will be conducted on PNNL premises unless otherwise noted.

The JPP identifies the required training. Some courses may require up to ten (10) working days of advance notice - Coordinate with the project CM for all training needs to include coursework details/requirements. Training format may be either classroom or "web based."

Project personnel to possess current State/Federal licensing/certifications for the work performed.

SCHEDULE - WORK

Referencing the Statement/Description of Work; Submit a simple Bar/Gantt Chart Schedule for approval by PNNL immediately after contract award. Schedule should depict major construction activities, submittals, key deliverables, permits and utility tie in dates to Battelle. Revise the schedule as needed to reflect actual construction dates.

RECORD DRAWINGS

Maintain one set of black-line white prints of the Contract Drawings. Mark-up drawings with an erasable red-colored pencil to show the actual installation when varied from original. Submit to the project CM upon completion of work.

DECLARATION OF KEY SUPERVISOR(S)

Key Supervisors include as a minimum the Contractors Jobsite Superintendent and the Site Safety Supervisor. Prior to on-Site work, Contractor shall declare its key supervisor(s) and submit documentation to demonstrate the individuals are adequately qualified to supervise the contract Work. The Site Safety Supervisor/Superintendent must meet the following minimum qualifications:

(1) Safety training in construction through seminars, workshops, conferences, educational courses, etc.

(2) 10-Hour OSHA Construction course

(3) Knowledge of CFR, Title 29, Part 1910, Occupational Safety and Health Standards

(4) Knowledge of CFR, Title 29, Part 1926, Safety and Health Regulations for Construction

(5) Knowledge of CFR, Title 10, Part 851, Worker Safety and Health Program

KEY SUPERVISOR(S)

(1) The Jobsite Superintendent shall be present on site during the performance of all fieldwork to oversee and coordinate the daily work activities. The Jobsite Superintendent shall be identified as the designated line management representative responsible for Contractor and sub-tier contractor's employees and empowered by Contractor to take immediate action to correct unsafe conditions/acts, and other deficiencies identified during inspections.

(2) The Jobsite Superintendent shall have a thorough knowledge of construction industry safety standards established by Federal and State regulations and shall provide documentation that they have attended a 10 hour OSHA Construction Course. This individual shall have the authority and responsibility to identify and correct hazardous and unsafe conditions, acts and non-compliances.

(3) The Jobsite Superintendent shall ensure that the Site Safety Supervisor is fully engaged and empowered to oversee and implement the CESH Program requirements.

(4) ***Copies of the following documents shall be maintained at the jobsite for Battelle review***; safety inspections, employee orientations, employee training records, weekly and monthly safety meeting records, equipment inspections, and competent person designations.

WORKER SAFETY – WEATHER CONDITIONS

To insure worker safety, work or portions of work may be temporarily and incrementally shut down due to high winds, lightning, or other inclement weather as determined by PNNL. Contractor will not be additionally compensated in terms of cost or schedule for weather related shutdowns. PNNL will issue weather warnings via radio, telephone, public announcement, or in person. The Contractor shall ensure that all contractor and subcontractor personnel are apprised of the warnings and take the required actions as stated below.

Contact 375-2124 and/or monitor local radio stations for PNNL inclement weather closure and delay information before reporting to site. During inclement weather delay or closure conditions the Contractor shall not proceed with the work without authorization by the Construction Manager.

Sustained winds greater than 25 mph and/or gusts greater than 40 mph – all crane activities must cease and be secured. All loose outdoor material shall be secured. The Contractor's safety representative shall evaluate work on roofs or elevated work surfaces before continuing. All personnel working outdoors are required to wear safety goggles. Depending on dust hazards, work may be stopped. Personnel may be directed to shelter.

Sustained winds greater than 30 mph and/or gusts greater than 45 mph – all outdoor work activities may be stopped. Personnel may be directed to shelter.

Sustained winds greater than 50 mph – outdoor work activities will be curtailed and limited to those approved by PNNL and Contractor's Safety Representative. Personnel will be directed to shelter. Site closure may be implemented and all work activities ceased.

Thunderstorm/lightning advisory based on lightning activity within a 30 mile radius of the Site – Contractor personnel shall not work on roofs or elevated surfaces. Personnel shall stay away from equipment such as drilling rigs, cranes, boom trucks, or elevated work platforms. These protective measures shall remain in place until Battelle cancels the warning.

CONSTRUCTION & DEMOLITION WASTE RECYCLING

Complete and submit to the PNNL CM; the attached Construction & Demolition Waste Recycling Submittal Form.

SUBMITTALS

Submittal Schedule used for identifying required submittals. Provided as a convenience to the contractor – Omission of an item does not relieve the Contractor from requirements specified elsewhere. ***Include*** S729087 with Submittal No.

SUBMITTAL SCHEDULE							
Subm. No.	Description	Spec Section/Dwg	No. Copies	Type	Date Recvd	Date Returned	Status
1	Training & access requirements for contractor personnel		1	Approval			
2	Contractors JSA		1	Approval			
3	Construction Schedule		1	Approval			
4	Letter of Confirmation (CESH compliance)		1	Information			
5	Declaration of Key Supervisor(s)		1	Information			
6	Welding Procedure Spec. (WPS), Procedure Qual. Test Record (PQR), Welder Qual. Test Rec. & Continuity Log	QA-171	1	Approval			
7	Final Welding Inspection (PNNL)		1	Approval			
8	Fire Proofing Repair Inspection (PNNL)		1	Approval			
9	Record Dwg's		1	Information			
10	Recycling Submittal Form		1	Information			
11	Injury/Illness Report		1	Information			
12	Warranties		1	Information			

Pacific Northwest
NATIONAL LABORATORY

CONSTRUCTION & DEMOLITION WASTE RECYCLING SUBITTAL FORM

Instructions for Completing

CONSTRUCTION & DEMOLITION WASTE - RECYCLING SUBMITTAL FORM

- This C&D Waste-Recycling Submittal Form is used by contractors performing work on behalf of Battelle for required reporting of construction and demolition waste that is recycled or reused.
- Refer to Specification 017600 ENVIRONMENTAL PROTECTION AND WASTE MANAGEMENT (if applicable)
- Report all weights in pounds, kilograms or tons.

FORM COMPLETION INSTRUCTIONS

Section A, Total Waste Generated:

- Under "Material" describe the construction and demolition waste generated from the project (e.g. concrete rubble, general construction debris, etc).
- Under "Weight" enter the total weight of all waste generated from the project INCLUDING any materials sent for recycle or reuse (weights from estimates or scaled).

Section B, Recycled/Reused:

- Under "Material" describe each type of material recycled or reused (e.g. scrap metal, casework, etc).
- Under "Weight" enter the total weight of each type of material recycled.
- Enter the weight (estimated) of any items sent off-site for reuse separately.
- If available, attach truck tickets or receipts from recycling or disposal facilities.

Section C, Percent Recycled:

- Under Total Generated enter the weight of total waste generated from section A.
- Add together the weight of ALL materials sent for recycle or reuse in section B and enter under Total Recycled/Reused.
- Divide Total Recycled/Reused by Total generated and enter the quotient under % Recycled.

Signature Block:

- Identify the project by PNNL service request number or title, sign and date the form, and forward to the PNNL Construction or Project Manager.

Pacific Northwest
NATIONAL LABORATORY

CONSTRUCTION & DEMOLITION WASTE RECYCLING SUBITTAL FORM

Complete all sections below and provide to the PNNL Construction or Project Manager.

If there is no reportable activity in a section, enter N/A:

A. TOTAL WASTE GENERATED:

Material	Weight

B. RECYCLED/REUSED:

Material	Weight

C. PERCENT RECYCLED:

Total Generated	Total Recycled/Reused	% Recycled

Project: _____ Signature: _____ Date: _____

Project Title and Contract Number Contractor Representative

INJURY/ILLNESS REPORT

Contractor: _____

Contract Number: _____

Contract Title: _____

Reporting Month: _____

Contractor	Average No. of Employees	Hours Worked	Injuries	Illnesses	Near Misses	Property Damage	Fires

Subcontractor(s)	Average No. of Employees	Hours Worked	Injuries	Illnesses	Near Misses	Property Damage	Fires

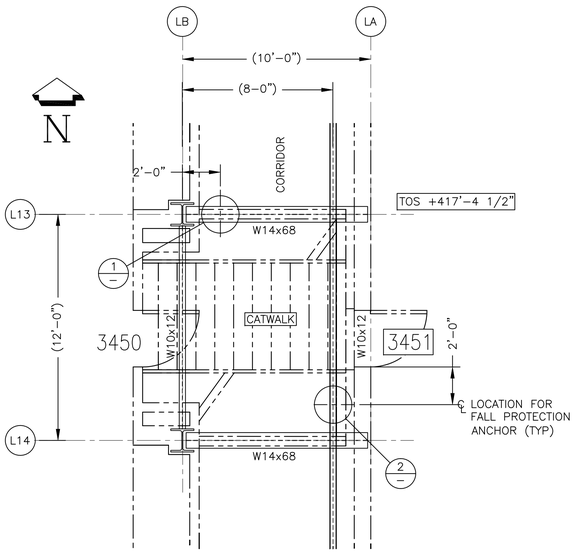

3450 PARTIAL PLAN – MECH LEVEL

SCALE: 1/4" = 1'-0"

ARCHITECTURAL REF: H-3-71018
STRUCTURAL REF: H-3-71161

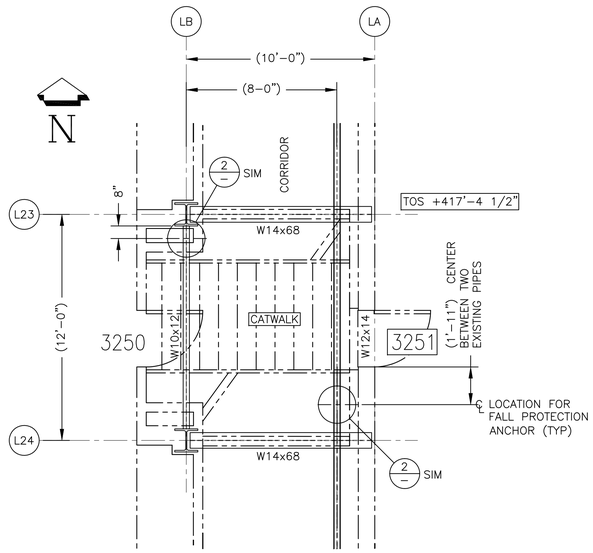

3250 PARTIAL PLAN – MECH LEVEL

SCALE: 1/4" = 1'-0"

ARCHITECTURAL REF: H-3-71017
STRUCTURAL REF: H-3-71160

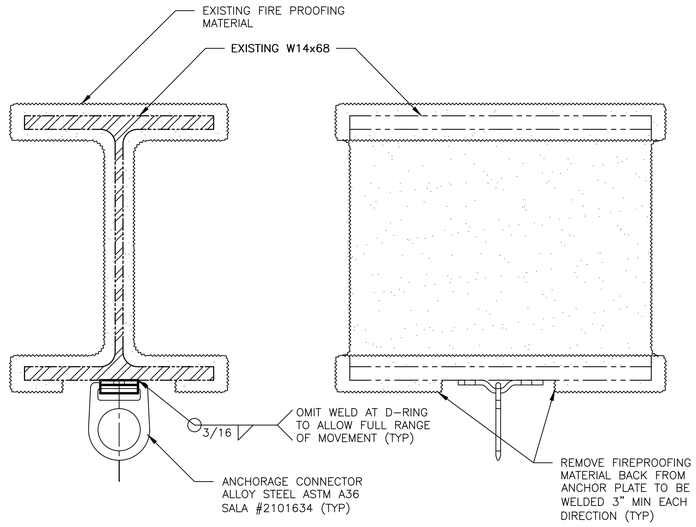

1 ANCHOR DETAIL

SCALE: 3" = 1'-0"

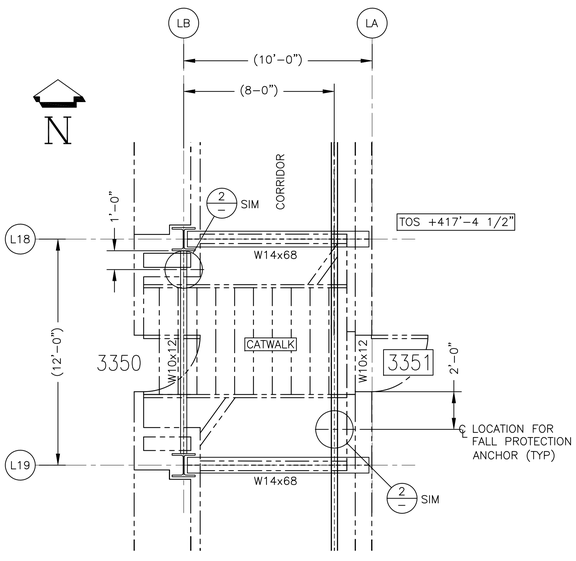

3350 PARTIAL PLAN – MECH LEVEL

SCALE: 1/4" = 1'-0"

ARCHITECTURAL REF: H-3-71017
STRUCTURAL REF: H-3-71160

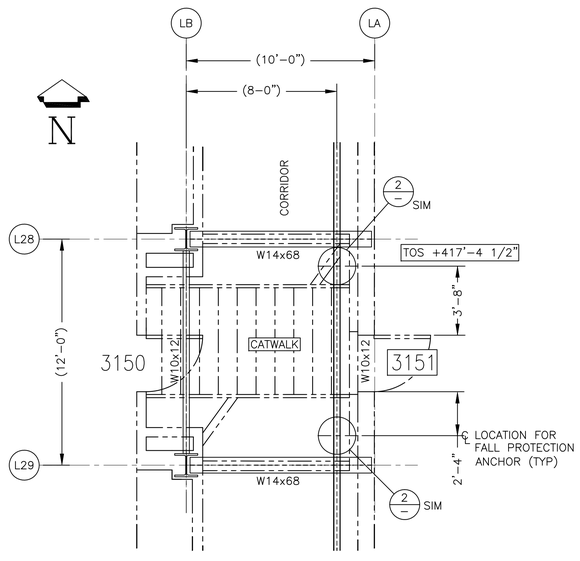

3150 PARTIAL PLAN – MECH LEVEL

SCALE: 1/4" = 1'-0"

ARCHITECTURAL REF: H-3-71016
STRUCTURAL REF: H-3-71159

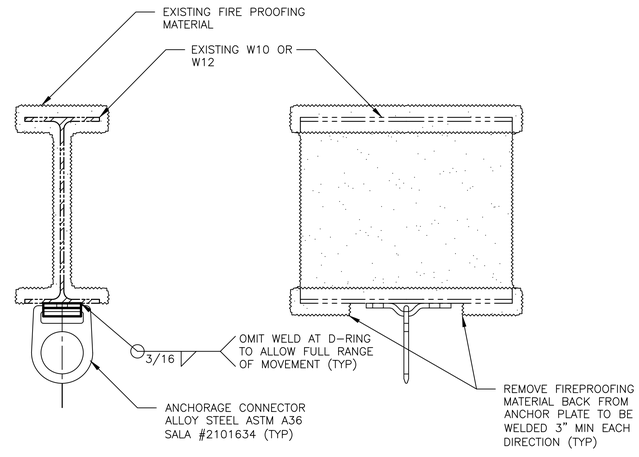

2 ANCHOR DETAIL (TYP 7 PL)

SCALE: 3" = 1'-0"

SPECIFICATIONS

(UNLESS OTHERWISE STATED)

DIVISION 1 – GENERAL REQUIREMENTS

01001–BASIC REQUIREMENTS

A. ALL MATERIALS SHALL BE AS SPECIFIED OR BATTELLE ENGINEERING APPROVED EQUAL.

B. CONSTRUCTION CHANGES SHALL BE PER ENGINEERING CHANGE NOTICE (ECN) IF DIFFERENT THAN SHOWN.

C. BATTELLE FIRE PROTECTION SHALL INSPECT ALL AREAS AFTER FIREPROOFING REPAIR IS COMPLETE.

01400–QUALITY REQUIREMENTS

A. ALL WORK SHALL CONFORM TO THE INTERNATIONAL BUILDING CODE, THE MUNICIPAL CODE FOR THE CITY OF RICHLAND, WASHINGTON, AND AISC "SPECIFICATION FOR THE DESIGN, FABRICATION, AND ERECTION OF STRUCTURAL STEEL FOR BUILDINGS"IN ACCORDANCE WITH THE MANUAL OF STEEL CONSTRUCTION.

B. FIELD VERIFY DIMENSIONS PRIOR TO FABRICATION OR INSTALLATION OF MATERIALS. THE CONSTRUCTION MANAGER SHALL VERIFY THAT ALL EIGHT LOCATIONS ARE LAID OUT CORRECTLY TO THIS DRAWING AND ORIENTED AS BUILDING ENGINEER AND CRAFTS WANT THEM.

C. ALL EXISTING SURFACES DAMAGED DURING CONSTRUCTION SHALL BE REPAIRED TO MATCH EXISTING.

D. ALL DIMENSIONS ARE IN INCHES UNLESS OTHERWISE SPECIFIED.

E. ABBREVIATIONS ARE IN ACCORDANCE WITH ASME Y14.38–1999.

F. WELDING QUALIFICATIONS AND FABRICATION FOR CARBON STEEL STRUCTURES SHALL BE PER AWS D1.1–2010. EXAMINATION OF ALL FINAL WELDS PER BATTELLE ENGINEER PRIOR TO APPLICATION OF FIREPROOFING MATERIALS.

G. AFTER WELDING INSPECTION BY BATTELLE CIVIL ENGINEERING EXPOSED STRUCTURAL STEEL SHALL BE RECOATED WITH W.R. GRACE MONOKOTE PATCHING COMPOUND

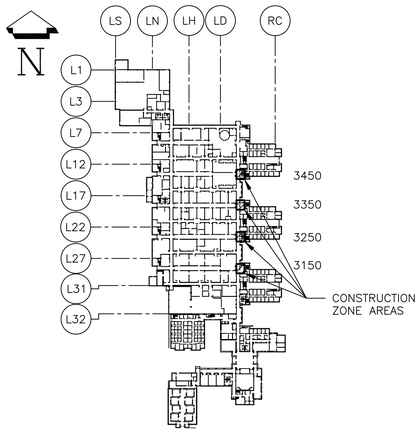

KEY PLAN

SCALE: NONE

REVISIONS DESCRIPTION

DOCUMENT NO S729087–S1–201		SERVICE REQUEST NO S729087
CURRENT REVISION	ORIGINAL	U. S. DEPARTMENT OF ENERGY PACIFIC NORTHWEST SITE OFFICE
DRAWN DS BOYLE	DRAWN DS BOYLE	Pacific Northwest Division — Battelle — Richland, Washington 99352
CHECKED DA KOONTZ	CHECKED DA KOONTZ	SERVICE CORRIDOR FALL PROTECTION ANCHORS PARTIAL PLAN & DETAILS
DRAFTING CHECKER SD BURNETT	DRAFTING CHECKER SD BURNETT	
ENGINEER SB SASLOW	ENGINEER SB SASLOW	
APVD DJ DESMET	APVD DJ DESMET	
OTHER	OTHER	PROJ TITLE EMSL FALL PROTECTION ANCHOR POINTS
OTHER	OTHER	SIZE D — BLDG EMSL — DWG NO S1–201 — REV NO 0
		SCALE SHOWN — SHEET 1 OF 1

DWG NAME: C:\PDF\S1-201.dwg
PLOT DATE: 4/7/2015 2:41 PM
PLOT BY: DE SMET, DARRELL J

PNNL–BATT_D [REV1 8–19–14]

Job Planning Package Click the ? for online help

Service Request # S729087B	Facility: EMSL	Location: 3350	Funding WP: N34453

Request Subject:	CM Support (Nelson) - "EMSL Fall Protection Install"
Description:	Structural Engineering support was used about 6 years ago to install temporary beam clamp type apparatus for fall protection during installation of work platforms for heat recovery coil cleaning. During a recent fire hazard analysis, it was determined that the units violate the fireproofing on the beams, which is considered an impairment. Work with Work Safety and Health and Fire Protection Engineering to determine a permanent solution to this problem that can be implemented in 4 - 8 places before the next coil cleaning evolution. ---------- Design is nearly completed on this work and the plant forces work review has been returned as "covered work". Transferring this to CWO for performance - db 4/28/2015
Justification:	
Equipment Category:	2
Systems Affected:	Architectural, Mechanical

JPP Type, Hold Points and Comments

Contingency Emergency Plan Hold Point:	In case of Emergency stop work and place the work area in a safe condition if possible. For all emergencies contact 9-375-2400, and contact the Person-in-Charge (PIC). Obtain approval from the PIC before restart of work. Follow the EMSL Emergency Information Posting (EIP) located in the main lobby of the building for emergency response, evacuation, and staging area routes. Employees have the right and/or responsibility to STOP WORK without fear of reprisal, when convinced a situation exists that places themselves, coworkers, or the environment in danger. If this happens "stop" put work in safe-condition, and notify your supervisor and PIC immediately.
Additional Comments:	This form is used to identify hazards, associated mitigation actions (in addition to those contained in the IOPS Lab Handbook for this space) and provide additional information and/or sequential work steps necessary to complete this task. All staff involved in this task are to completely review this checklist prior to performing any work. If there are any questions immediately contact your Supervisor or the PIC. CONTACTS: Construction Manager: Richard "Rich" Nelson 371-6025 or Cell 521-6529 Construction Safety: Scott Somers 371-7726 or Cell 539-5094 Building Manager: Ken McMullin 371-6020 or Cell 551-7807 Building Engineer: Dave Brawn 371-6022 or Cell 392-1591 EMSL Fire Engineer: David Wyatt 371-7887 or Cell 551-3350 It is expected that the Contractor's attitudes on the environment, safety, and health must go far beyond the written contractual documents. Good sense, good judgment, and effective management must prevail at all times. Environmental, worker safety, and health issues must NEVER be compromised. Any changes in the project scope or the means, materials, and methods planned for execution of the work requires review and possible modification of this document, WEA, and the contractors JSA.

	If work conditions change and/or are different than that described herein STOP WORK and notify your supervisor and CM. The PNNL Person-in-Charge (PIC)/Construction Manager (CM) and contact for all work described herein is Rich Nelson or his delegate. This JPP is used to identify requirements associated with performing the work and provide mitigation. The CM, PNNL safety, and general contractor shall make sure that all staff, new workers and subcontractors involved with this project shall completely review and understand this JPP, the WEA (Workplace Exposure Assessment) and the Contractor's Job Safety Analysis (JSA) prior to entering the construction project and performing work. If there are any questions or concerns immediately contact your Supervisor and the CM. Hazards and/or controls contained in this JPP are not all inclusive. There is also potential for unexpected hazards and/or known hazards to change as work activities evolve. The Contractor retains responsibility for identifying work related hazards and mitigation of those hazards. All non-emergency related injuries or accidents (i.e., personal, property or equipment) shall be reported to the CM. A security badge is required when visiting or working at DOE or PNWD facilities and/or the Hanford Site. All employees working must complete required training. Facility doors must not be left unlocked, unattended or blocked open. Observe all signs and postings at all entrances. Read the posted Hazard Awareness Summary if applicable. All work requires prior approval and must be released through the Core Team Plan-of – the-Day (POD). Contractors shall notify the CM at a minimum of 5 working days in advance of any equipment or building system outage. An "Access/Isolation/Outage Request" must be completed in full and submitted to the CM prior to isolation of any facility or service. Obtain this form from the CM. Contractor must submit Material Safety Data Sheets (MSDS) to the CM, prior to bringing chemicals/materials onto the jobsite and/or into a PNNL facility. The CM shall provide copies to Construction Safety and Facility Services Representative (FSR) for approval (Chemical check in at the loading dock). All temporary power cords shall be run overhead or protected to prevent damage or trip hazard. Extension cords shall be GFCI protected. Housekeeping is required typically at the end of each shift. All non-regulated waste shall be disposed of by the contractor in the appropriate outside/off site waste receptacles.

Work

Other Design Basis Documents:	Yes		
Specific Design Information:	S1-201 - Service Corridor Fall Protection Anchors Partial Plan & Details, sheet 1 of 1.		
Work to be Performed By:	Off-site Contractor		

Lock and Tag Requirements

	Instructions:

Permits and Plans

Fall Protection Work Plan (link), Hot Work Permit, Job Safety Analysis, Work Place Exposure Assessment

Other permits:	

Job Site Prep

Documented Pre-job Meeting	Yes	
Barriers	Yes	Workers shall establish area barriers [caution tape, rope, orange plastic construction fence, etc.] around the work area to maintain a safe work environment and/or to keep unauthorized personnel out.
Postings	Yes	Workers shall establish area postings [caution/notice signs, overhead work, out of service, hard hat required, etc.] around the work area to maintain a safe work environment and/or to keep unauthorized personnel out.

Personnel Requirements

Special Training Requirements	Yes	EMSL Orientation, Fall Protection (Course 701), Hot Work Fire Watch Training (Course 679), Hot Work Permit Training (Course 988)
Special Medical Exams	No	
Security Clearance Requirements	Yes	1 (no clearance)

Work Activity

Step #	Potential Hazards/Control Methods Define Work Activity
10	None Specified
	The PNNL PIC shall hold a documented pre-job meeting with the Contractors to review performance of the work activity, JPP, WEA, Fall Plan, and the Contractor shall review their own JSA. All questions and concerns will be addressed in this meeting and any issues resolved prior to starting of work.
20	Falls from elevations > 6 ft. / Fall Protection Work Plan Falls from elevations > 6 ft. / Per Contractors JSA Welding cutting grinding / Welding cutting & grinding permits Noise / Per Contractors JSA Dust / Per Contractors JSA
	Install new fall protection anchor points in EMSL 3150, 3250, 3350 and 3450 per drawing S1-201, sheet 1 of 1. When all anchors are installed/welded into place the CM shall schedule inspection walk-down with PNNL Civil Engineer, per drawing S1-201, sheet1 of 1. **PNNL Civil Engineer acceptance (signature/date):** .
	Falls from elevations > 6 ft. / Per Contractors JSA Falls from elevations > 6 ft. / Per Fall Protection Plan

	Dust / Per Contractors JSA
30	When PNNL Civil Engineer accepted all welds, contractor shall re-apply fireproofing to exposed section of the structural members per drawing S1-201, sheet1 of 1. When fireproofing is completed the CM shall schedule acceptance walk-down with PNNL Fire Engineer per drawing S1-201, sheet1 of 1. **PNNL "Fire Code Inspection" acceptance (signature/date):** .

Approvals

Building Engineer		Date: 6/1/15
Building Manager		Date: 6/1/15
Construction Manager		Date: 5-29-2015
Planner		Date: 5-29-2015
Safety: Fire		Date: 6/1/2015
Safety: Occupational		Date: 05/29/15

Pacific Northwest NATIONAL LABORATORY	**Workplace Exposure Assessment**	Indu...al Hygiene Case #: 10240-IH	
		Date: 05/19/15	Page 1 of 2
		☒ Initial Survey	☐ Re-Survey ☐ Other

Area: RCHD	Project Title: Install Fall Protection Anchors	Organization: F&O/CWO/Nelson	IH: Scott Somers
Bldg.: EMSL/3350	Project #: N/A	SR #: S729087B	Phone: (509) 539-5094
Floor: Mech Mezzanine	Room: M3151 (and others)	Work Package #: N34453	Email: Scott.Somers@pnnl.gov

Facility/Project and Operation: Describe the facility, work area, and process/operation being evaluated.

Install fall protection attachment points to structural steel for use during future coil cleaning tasks. Anchors will be welded. Fire proofing insulation material will need to stripped back and then re-applied. Fall protection planning is required. Hot Work Permitting is required. Installation shall conform to PNNL and OEM requirements.

Preliminary Hazard Assessment: Inventory chemical, physical, biological, and ergonomic stressors or attach PHA form.

Work activities associated with this Service Request include the following hazards: Employees will be exposed to awkward positions (bending, kneeling, lifting, and reaching), material handling, power tools, work at heights, silica, noise, ladders, noise, and welding.

Refer to the PNNL Contractor Environment, Safety and Health Manual (CESH) for requirements associated with the identified hazards, work situations, and implementation details. Contractor shall be cognizant and mindful of changing conditions; and as necessary, revise their JSA, hold pre-jobs, institute controls, and provide worker training/awareness. If conditions change from those that are described in their JSA, stop work and call the PNNL Construction Manager (CM) for guidance.

Potentially Exposed Work Force: Define the potentially exposed workforce

Contracted workers are the primary potential exposed workgroup. Building occupants will be minimally impacted. CM to coordinate work with building staff.

Risk Assessment: Perform risk assessment. Attach sampling plan if quantitative monitoring is required.

Legacy Building Products/Historical Space Uses: F&O work activities associated with Standing Order 2014-006-F&O, the EMSL Complex does not require a review for work in inaccessible spaces or a completed facility assessment. The determination to exempt these facilities from the F&O Standing Order was due to the age of the facilities and the limitations on work with beryllium since their construction.

Welding Fume/UV: Notification is needed to alert chemical sensitive staff members within our facilities. The PNNL CM shall work with building management to ensure system configuration for welding fume. Do not weld until the CM has cleared the activity. UV controls will ensure that no entrants/ staff are exposed to direct or indirect ultraviolet radiation. Refer to hot work permit for specific requirements.

Silica/Quartz: Potential silica (quartz) generating activities will be conducted during this scope; Monokote fire protection msds indicates that silica is a constitute. Silica particulates are generated whenever abrasive actions are performed in 'earth bearing materials', such as concrete, brick, etc. Contractor will establish controls that are considered best practices (wet methods, HEPA vacuum) to ensure that levels are below exposure levels. Contractor will support PNNL sampling and assessment activities if requested

Hazard Control: List and describe required engineering controls, administrative controls, and PPE equipment

Hand, Power Tools, and Cords: Verify that tools are in a safe operating condition and are equipped with guards and only use the tool according to the manufacture's recommendations. All damaged or defective tools, cords, equipment shall be tagged and removed from the job site. Arrange work area to allow for adequate material handling too protect against potential injury such as, pinch point or kickbacks. All electrical tools and cords shall be GFCI protected.

Housekeeping: General housekeeping should be performed throughout the task to prevent additional workplace hazards. Equipment and supplies shall be staged in a manner to prevent hazard to workers and facility occupants.

Material Handling, Strains/Sprains, Body Positioning, and Awkward Movements: Contractor staff shall be mindful of awkward loads, lifting limits, and ergonomic stressors. Remember to size-up each load, stretch prior to lifting, ask for assistance, and be vigilant to personal limits. Ensure good posture, hand hold, and foot positioning prior to lifting. Pre-job briefing to include proper lifting techniques.

Permits: Contractor will be observant to special permitting required while in PNNL managed facilities. Work dealing with electrical, spark producing activities, blind penetration, confining spaces and excavation all require prior approval. In addition, work involving hoisting and rigging, fall protection/scaffolding, utility or fire protection outages, respirator use, chemical use and work involving unique hazards may need additional planning. Competent or qualified persons are needed for many of the noted permits. A Competent Person form is available in the CESH manual, as well as permit forms.

Personal Protective Equipment (PPE): At a minimum, gloves (leather/cut resistant based on task hazards), safety glasses with side shields, substantial work boots, long pants and work shirt, shall be worn in posted construction areas. Additional, task specific PPE will be noted in the JSA. Fire clothing required for welder.

Ladders: Inspect all ladders prior to use. Only use ladders appropriate for the work being performed. All ladders found to have defects shall be tagged out of service and removed from the work area. Staff shall be trained to ladder safety and use. Pre-job shall include:
(i) The nature of fall hazards in the work area;
(ii) The correct procedures for erecting, maintaining, and disassembling;
(iii) The proper construction, use, placement, and care in handling of all and ladders;
(iv) The maximum intended load-carrying capacities of ladders used.

Chemical Products: (i.e. patch compound, etc): In order to ensure chemical safety in the workplace, information must be available about the identities and hazards of the chemicals. All products must have labels and MSDS to convey the hazard information. The Contractors' JSA shall identify the safe use methods and PPE required when handle these products. Contractor shall notify the CM prior to chemicals brought onsite or used within PNNL facilities.

Noise: Contractor to train employees to which processes require hearing protection; have employees enrolled in a hearing conservation program for those >85dBA-TWA; and assign protective aides with appropriate attenuation.

Falls: Contractor shall submit a fall protection work plan or a detailed JSA with required elements to PNNL for review prior to commencing elevated work (i.e. scaffolding, work platform, aerial lift). Designate competent person for this activity; user training is required

Welding/Grinding/Hot Work: Under the direction of the hot work permit, welding will be released daily. Smoke eaters are considered 'best practice' and should be utilized. Staff qualification for hot work planning and fire extinguisher use. If surfaces are painted/primed; remove 3-inches of material from weld area in all directions. FR clothing will be inspected prior to use. UV screens will protect stray emissions.

Reevaluation Frequency: Mark the appropriate reevaluation frequency

☐ Reevaluate annually (High Hazard)	☐ Reevaluate every two years (Moderate Hazard)	☐ Reevaluate every four years (Low Hazard)	☒ One-time event

Survey Performed by	Signature	Date
Scott Somers	SMS	05/21/15

Existing Material
https://grace.com/construction/en-us/Documents/MK-6%20HY_USA_ENG_SDS_Z-01815.pdf

Patching Compound
https://grace.com/construction/en-us/Documents/Monokote_Patching_Compound_SD2107_-_(USGHS).pdf

IMPLEMENTATION OF THE HANFORD SITE STABILIZATION AGREEMENT

(a) The Hanford Site Stabilization Agreement (HSSA) for all construction work for the U. S. Department of Energy (DOE) at the Hanford Site, which is referenced in this Clause, consists of a Basic Agreement dated September 10, 1984, plus Appendix A, both of which may be periodically amended. The HSSA is hereby incorporated into this Contract by reference. The Contractor is responsible for obtaining the most current text from DOE.

(b) This Clause applies to employees performing work under Contracts (or subcontracts) administered by DOE which are subject to the *Davis-Bacon Act*, in the classifications set forth in the HSSA for work performed at the Hanford Site.

(c) Contractors and subcontractors at all tiers who are parties to an agreement(s) for construction work with a Local Union having jurisdiction over DOE construction work performed at the Hanford Site, or who are parties to a national labor agreement for such construction work, shall become signatory to the HSSA and shall abide by all of its provisions, including its Appendix A. Subcontractors at all tiers who have subcontracts with a signatory Contractor or subcontractor shall become signatory to the HSSA and shall abide by all of its provisions, including its Appendix A.

(d) Contractors and subcontractors at all tiers who are not signatory to the HSSA and who are not required under paragraph (c) above to become signatory to the HSSA, shall pay not less and no more than the wages, fringe benefits, and other employee compensation set forth in Appendix A thereto and shall adhere, except as otherwise directed by the Contracting Officer, to the following provisions of the Agreement:

(1) Article VII Employment (Section 2 only);
(2) Article XII Non-Signatory Contractor Requirements;
(3) Article XIII Hours of Work, Shifts, and Overtime;
(4) Article XIV Holidays;
(5) Article XV Wage Scales and Fringe Benefits (Sections 1 and 2 only);
(6) Article XVII Payment of Wages-Checking In and Out (Section 3 only);
(7) Article XX General Working Conditions; and
(8) Article XXI Safety and Health.

(e) The Contractor agrees to make no contributions in connection with this Contract to Industry Promotion Funds, or similar funds, except with the prior approval of the Contracting Officer.

(f) The obligation of the Contractor and its subcontractors to pay fringe benefits shall be discharged by making payments required by this Contract in accordance with the provisions of the amendments to the *Davis-Bacon Act* contained in the Act of July 2, 1964 (Public Law 88-349-78 Statutes 238-239), and U.S. Department of Labor regulations in implementation thereof (Code of Federal Regulations Title 29 Parts 1 and 5).

(g) The Contracting Officer may direct the Contractor to pay amounts for wages, fringe benefits, and other employee compensation if the HSSA, including its Appendix A, is modified by the involved parties.

(h) In the event of failure to comply with paragraphs (c) (d) (e) (f) and (g), or failure to perform any of the obligations imposed upon the Contractor and its subcontractors hereunder, the

Contracting Officer may withhold any payments due to the Contractor and may terminate the Contract for default.

(i) The rights and remedies of the Government provided in this Clause shall not be exclusive and are in addition to any other rights and remedies of the Government provided by law or under this Contract.

(j) The requirements of this Clause are in addition to, and shall not relieve the Contractor of, any obligation imposed by other Clauses of this Contract, including Section I Clauses entitled, *FAR 52.222-4, Contract Work Hours and Safety Standards Act—Overtime Compensation, FAR 52.222-6, Davis-Bacon Act, FAR 52.222-7, Withholding of Funds, FAR 52.222-8, Payrolls and Basic Records, FAR 52.222-10, Compliance with Copeland Act Requirements,* and *FAR 52.222-12, Contract Termination – Debarment.*

(k) The Contractor agrees to maintain its bid or proposal records showing rates and amounts used for computing wages and other compensation, and its payroll and personnel records during the course of work subject to this Clause, and to preserve such records for a period of three (3) years thereafter, for all employees performing such work. Such records will contain the name and address of each such employee, his/her correct classification, rate of pay, daily and weekly number of hours worked, and dates and hours of the day within which work was performed, deductions made, and amounts for wages and other compensation covered by paragraphs (c) (d) (e) (f) and (g) hereof. The Contractor agrees to make these records available for inspection by the Contracting Officer and will permit him/her to interview employees during working hours on the job.

(l) The Contractor agrees to insert the provisions of this Clause including this paragraph (k) in all subcontracts for the performance of work subject to the *Davis-Bacon Act*.

A copy of the *Hanford Site Stabilization Agreement* is located at: http://www.hanford.gov

The U.S. Department of Labor wage determinations for the *Davis-Bacon Act* and S*ervice Contract Act* are located at: http://www.wdol.gov

General Decision Number: WA150030 06/12/2015 WA30

Superseded General Decision Number: WA20140030

State: Washington

Construction Type: Building

County: Benton County in Washington.

BUILDING CONSTRUCTION PROJECTS (does not include single family homes or apartments up to and including 4 stories).

Note: Executive Order (EO) 13658 establishes an hourly minimum wage of $10.10 for 2015 that applies to all contracts subject to the Davis-Bacon Act for which the solicitation is issued on or after January 1, 2015. If this contract is covered by the EO, the contractor must pay all workers in any classification listed on this wage determination at least $10.10 (or the applicable wage rate listed on this wage determination, if it is higher) for all hours spent performing on the contract. The EO minimum wage rate will be adjusted annually. Additional information on contractor requirements and worker protections under the EO is available at www.dol.gov/whd/govcontracts.

Modification Number	Publication Date
0	01/02/2015
1	02/27/2015
2	03/27/2015
3	06/12/2015

ASBE0082-001 08/01/2014

	Rates	Fringes
ASBESTOS WORKER/HEAT & FROST INSULATOR	$ 33.42	17.85

BRWA0001-002 06/01/2014

	Rates	Fringes
BRICKLAYER	$ 28.33	15.01

CARP9003-003 06/01/2014

	Rates	Fringes
CARPENTER (Including Cabinet Installation, Drywall Hanging and Form Work)	$ 27.06	13.39

ZONE PAY:

ZONE 1	0-45 MILES	FREE
ZONE 2	46-65 MILES	$2.00/PER HOUR
ZONE 3	66-100 MILES	$3.00/PER HOUR
ZONE 4	OVER 100 MILES	$4.50/PER HOUR

DISPATCH POINTS:

PASCO (515 N. Neel Street) or Main Post Office of established residence of employee (Whichever is closest to the worksite).

SPOKANE (127 E. AUGUSTA AVE.) or Main Post Office of established residence of employee (Whichever is closest to the worksite).

WENATCHEE (27 N. CHELAN) or Main Post Office of established residence of employee (Whichever is closest to the worksite).

COEUR D' ALENE (1839 N. GOVERNMENT WAY) or Main Post Office of established residence of employee (Whichever is closest to the worksite).

MOSCOW (302 N. JACKSON) or Main Post Office of established residence of employee (Whichever is closest to the worksite).

ELEC0112-014 06/01/2014

	Rates	Fringes
ELECTRICIAN	$ 38.05	17.82

ELEC0112-015 08/01/2014

	Rates	Fringes
ELECTRICIAN (Low Voltage Wiring Only)	$ 25.87	3%+10.56

---

* ENGI0370-017 06/01/2015

	Rates	Fringes
POWER EQUIPMENT OPERATOR		
GROUP 1	$ 26.16	13.55
GROUP 2	$ 26.48	13.55
GROUP 3	$ 27.09	13.55
GROUP 4	$ 27.25	13.55
GROUP 5	$ 27.41	13.55
GROUP 6	$ 27.69	13.55
GROUP 7	$ 27.96	13.55
GROUP 8	$ 29.06	13.55

ZONE DIFFERENTIAL (Add to Zone 1 rate): Zone 2 - $2.00

Zone 1: Within 45 mile radius of Spokane, Pasco, Washington; Lewiston, Idaho

Zone 2: Outside 45 mile radius of Spokane, Pasco, Washington; Lewiston, Idaho

POWER EQUIPMENT OPERATORS CLASSIFICATIONS

GROUP 1: Compactor; Drill Oiler; Rollers, all types on subgrade, including seal and chip coatings

GROUP 2: Fork Lift

GROUP 3: Bulldozer (up to D-6 or equivalent)

GROUP 4: Drills (churn, core, calyx or diamond); Oiler; Loaders (overhead & front-end, under 4 yds. R/T); Vacuum Drill (reverse circulation drill under 8 inch bit)

GROUP 5: Backhoe (Under 45,000 gw); Trackhoe/Excavator (hoe Ram) (under 3/4 yd.); Cranes (25 tons & under), Drilling Equipment(8 inch bit & over) (Robbins, reverse circulation & similar)

GROUP 6: Asphalt Roller; Backhoe (45,000 gw and over to 110,000 gw); Trackhoe/Excavator (Hoe Ram) (3/4 yd. to 3 yd.); Compactor (self-propelled with blade); Cranes (over 25 tons, to and including 45 tons), Bulldozer, 834 R/T & similar; Loader Operator (front-end & overhead, 4 yds. incl. 8 yds.); Scrapers, all, rubber-tired; Screed Operator

GROUP 7: Backhoe (Over 110,000); Trackhoe/Excavator (Hoe Ram) (3 yds & over); Cranes (over 45 tons to but not including 85 tons); Loaders (overhead & front-end, over 8 yds. to 10 yds.); Rubber-tired Scrapers (multiple engine with three or more scrapers); Blade

GROUP 8: Cranes (85 tons and over, and all climbing, overhead,rail and tower); Loaders (overhead and front-end, 10 yards and over)

BOOM PAY: (All Cranes, Including Tower)

180 ft to 250 ft	$ .50 over scale
Over 250 ft	$ .80 over scale

NOTE:
In computing the length of the boom on Tower Cranes, they shall be measured from the base of the Tower to the point of the boom.

HAZMAT:

Anyone working on HAZMAT jobs, working with supplied air shall receive $1.00 an hour above classification.

IRON0014-012 07/01/2013

	Rates	Fringes
IRONWORKER (Ornamental, Reinforcing and Structural).....	$ 31.60	21.35

LABO0238-014 06/01/2013

	Rates	Fringes
LABORER: Mason Tender - Brick...	$ 24.10	10.65

LABO0238-021 06/01/2014

	Rates	Fringes
LABORER		
GROUP 1.....	$ 22.95	10.95
GROUP 2.....	$ 24.05	10.95
GROUP 3.....	$ 24.32	10.95
GROUP 4.....	$ 24.59	10.95

Zone Differential (Add to Zone 1 rates): Zone 2 - $2.00

BASE POINTS: Pasco
Zone 1: 0-45 radius miles from the main post office.
Zone 2: 45 radius miles and over from the main post office

LABORERS CLASSIFICATIONS

GROUP 1: Flagman

GROUP 2: Common or General Laborer; Form-Stripping

GROUP 3: Chipping Guns; Concrete Saw; Pipelayer

GROUP 4: Grade Checker; Gunite; Vibrating Plate

PAIN0054-001 06/01/2008

	Rates	Fringes
DRYWALL FINISHER/TAPER.....	$ 22.78	8.88

PLAS0072-008 06/01/2014

	Rates	Fringes

CEMENT MASON/CONCRETE FINISHER...$ 26.41 12.44

Zone Differential (Add to Zone 1 rates): Zone 2 - $2.00

BASE POINTS: Spokane, Pasco, Lewiston, Wenatchee

Zone 1: 0 - 45 radius miles from the main post office

Zone 2: 45 radius miles from the main post office

PLUM0598-013 06/01/2014

	Rates	Fringes
PLUMBER	$ 48.72	27.19

PLUM0598-015 06/01/2014

	Rates	Fringes
PIPEFITTER	$ 48.72	27.19

ROOF0189-011 07/01/2012

	Rates	Fringes
ROOFER (Includes Roof Tear Off, Waterproofing, and Installation of Metal Roofs)	$ 24.16	10.27

SFWA0699-005 07/01/2013

	Rates	Fringes
SPRINKLER FITTER (Fire Sprinklers)	$ 29.51	19.75

SHEE0066-018 08/01/2013

	Rates	Fringes
Sheet Metal Worker (Including HVAC Duct)	$ 32.83	17.16

TEAM0690-008 01/01/2014

	Rates	Fringes
Truck drivers: (ANYONE WORKING ON HAZMAT JOBS SEE FOOTNOTE A BELOW)		
ZONE 1: LEWISTON ZONE CENTER		

GROUP 3.....$ 22.94 15.19
GROUP 4.....$ 23.27 15.19
GROUP 5.....$ 23.38 15.19
GROUP 6.....$ 23.55 15.19
GROUP 7.....$ 24.08 15.19
GROUP 8.....$ 24.44 15.19
ZONE 1: PASCO ZONE CENTER
GROUP 3.....$ 24.42 15.19
GROUP 4.....$ 24.75 15.19
GROUP 5.....$ 24.86 15.19
GROUP 6.....$ 25.02 15.19
GROUP 7.....$ 25.56 15.19
GROUP 8.....$ 25.88 15.19
ZONE 1: SPOKANE ZONE CENTER
GROUP 3.....$ 22.94 15.19
GROUP 4.....$ 23.27 15.19
GROUP 5.....$ 23.38 15.19
GROUP 6.....$ 23.55 15.19
GROUP 7.....$ 24.08 15.19
GROUP 8.....$ 24.44 15.19

Zone Differential For ZONE 2: (Zone 1 +$2.00)

BASE POINTS: Spokane, Moses Lake, Pasco, Lewiston

Zone 1: 0-45 radius miles from the main post office
Zone 2: Outside a 45 mile radius from the main post office

TRUCK DRIVERS CLASSIFICATIONS
GROUP 3: Trucks, side, end, bottom and articulated end dump
(3 yards to and including 6 yds.)

GROUP 4: Trucks, side, end, bottom and articulated end dump
(over 6 yds. to & including 12 yds.)

GROUP 5: Trucks, side, end, bottom and articulated end dump
(over 12 yds. to & including 20 yds.)

GROUP 6: Trucks, side, end, bottom and articulated end dump
(over 20 yds. to & including 40 yds.)

GROUP 7: Truck, side, end, bottom and articulated end dump
(over 40 yds. to & including 100 yds.)

GROUP 8: Trucks, side, end, bottom and articulated end dump
(over 100 yds.)

FOOTNOTE A - Anyone working on a HAZMAT job, where HAZMAT
cerfification is required, shall be compensated as a
premium, in addition to the classification working in as
follows:

LEVEL C-D: - $.50 PER HOUR - This level may use an air

purifying respirator or additional protective clothing.

LEVEL A-B: - $1.00 PER HOUR - Uses supplied air in conjunction with a chemical splash suit or fully encapsulated suit with a self-contained breathing apparatus.

Employees shall be paid Hazmat pay in increments of four(4) and eight(8) hours.

SUWA2009-018 05/22/2009

	Rates	Fringes
FLOOR LAYER: Carpet and Vinyl....	$ 19.90	4.83
INSULATOR - BATT.....	$ 13.58	0.21
LABORER: Handheld Drill.....	$ 17.17	5.36
LABORER: Irrigation.....	$ 11.58	0.00
LABORER: Landscape.....	$ 11.48	0.00
LABORER: Mason Tender - Cement/Concrete.....	$ 9.00	0.00
METAL BUILDING ERECTOR.....	$ 12.23	3.86
OPERATOR: Bobcat/Skid Steer/Skid Loader.....	$ 16.86	0.00
OPERATOR: Concrete Pumper.....	$ 22.30	5.27
OPERATOR: Mechanic.....	$ 24.33	4.33
PAINTER: Brush Only.....	$ 14.50	0.50
PAINTER: Roller.....	$ 22.62	0.25
PAINTER: Spray.....	$ 22.47	0.00
TILE SETTER.....	$ 13.50	0.00
TRUCK DRIVER: Semi-Trailer Truck.....	$ 20.59	5.56

WELDERS - Receive rate prescribed for craft performing operation to which welding is incidental.

==========

Unlisted classifications needed for work not included within
the scope of the classifications listed may be added after
award only as provided in the labor standards contract clauses
(29CFR 5.5 (a) (1) (ii)).

The body of each wage determination lists the classification
and wage rates that have been found to be prevailing for the
cited type(s) of construction in the area covered by the wage
determination. The classifications are listed in alphabetical
order of "identifiers" that indicate whether the particular
rate is a union rate (current union negotiated rate for local),
a survey rate (weighted average rate) or a union average rate
(weighted union average rate).

Union Rate Identifiers

A four letter classification abbreviation identifier enclosed
in dotted lines beginning with characters other than "SU" or
"UAVG" denotes that the union classification and rate were
prevailing for that classification in the survey. Example:
PLUM0198-005 07/01/2014. PLUM is an abbreviation identifier of
the union which prevailed in the survey for this
classification, which in this example would be Plumbers. 0198
indicates the local union number or district council number
where applicable, i.e., Plumbers Local 0198. The next number,
005 in the example, is an internal number used in processing
the wage determination. 07/01/2014 is the effective date of the
most current negotiated rate, which in this example is July 1,
2014.

Union prevailing wage rates are updated to reflect all rate
changes in the collective bargaining agreement (CBA) governing
this classification and rate.

Survey Rate Identifiers

Classifications listed under the "SU" identifier indicate that
no one rate prevailed for this classification in the survey and
the published rate is derived by computing a weighted average
rate based on all the rates reported in the survey for that
classification. As this weighted average rate includes all
rates reported in the survey, it may include both union and
non-union rates. Example: SULA2012-007 5/13/2014. SU indicates
the rates are survey rates based on a weighted average
calculation of rates and are not majority rates. LA indicates
the State of Louisiana. 2012 is the year of survey on which
these classifications and rates are based. The next number, 007
in the example, is an internal number used in producing the
wage determination. 5/13/2014 indicates the survey completion
date for the classifications and rates under that identifier.

Survey wage rates are not updated and remain in effect until a new survey is conducted.

Union Average Rate Identifiers

Classification(s) listed under the UAVG identifier indicate that no single majority rate prevailed for those classifications; however, 100% of the data reported for the classifications was union data. EXAMPLE: UAVG-OH-0010 08/29/2014. UAVG indicates that the rate is a weighted union average rate. OH indicates the state. The next number, 0010 in the example, is an internal number used in producing the wage determination. 08/29/2014 indicates the survey completion date for the classifications and rates under that identifier.

A UAVG rate will be updated once a year, usually in January of each year, to reflect a weighted average of the current negotiated/CBA rate of the union locals from which the rate is based.

WAGE DETERMINATION APPEALS PROCESS

1.) Has there been an initial decision in the matter? This can be:

* an existing published wage determination
* a survey underlying a wage determination
* a Wage and Hour Division letter setting forth a position on a wage determination matter
* a conformance (additional classification and rate) ruling

On survey related matters, initial contact, including requests for summaries of surveys, should be with the Wage and Hour Regional Office for the area in which the survey was conducted because those Regional Offices have responsibility for the Davis-Bacon survey program. If the response from this initial contact is not satisfactory, then the process described in 2.) and 3.) should be followed.

With regard to any other matter not yet ripe for the formal process described here, initial contact should be with the Branch of Construction Wage Determinations. Write to:

Branch of Construction Wage Determinations
Wage and Hour Division
U.S. Department of Labor
200 Constitution Avenue, N.W.
Washington, DC 20210

2.) If the answer to the question in 1.) is yes, then an interested party (those affected by the action) can request review and reconsideration from the Wage and Hour Administrator (See 29 CFR Part 1.8 and 29 CFR Part 7). Write to:

Wage and Hour Administrator
U.S. Department of Labor
200 Constitution Avenue, N.W.
Washington, DC 20210

The request should be accompanied by a full statement of the interested party's position and by any information (wage payment data, project description, area practice material, etc.) that the requestor considers relevant to the issue.

3.) If the decision of the Administrator is not favorable, an interested party may appeal directly to the Administrative Review Board (formerly the Wage Appeals Board). Write to:

Administrative Review Board
U.S. Department of Labor
200 Constitution Avenue, N.W.
Washington, DC 20210

4.) All decisions by the Administrative Review Board are final.

==========

END OF GENERAL DECISION&#65533;