Statement of Work

Engineering Evaluation of ARM Precipitation Radars at SGP November 10, 16

Introduction

The U. S. Department of Energy's Atmospheric Radiation Measurement (ARM) climate research facility has procured and deployed X-band Scanning ARM Precipitation Radars (XSAPR) at its facilities. Three of these radars are deployed at fixed site in Southern Great Plains (SGP) and one of them is deployed at fixed site in Northern Slope Alaska (NSA). XSAPR is dual polarization radar operating at X-band using a magnetron transmitter and a single offset dual-polarized antenna. The radar uses coherent on receive technology to provide Doppler observation. The general layout of the system is shown in Figure 1 and the specification is listed in Figure 2.

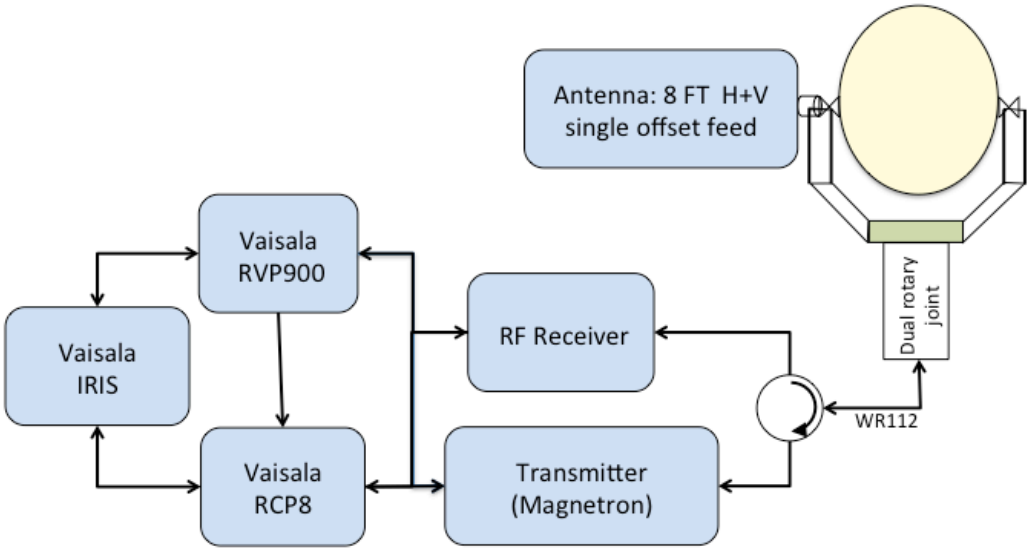

Figure 1 Block diagram of XSAPR system.

Parameter	XSAPR
Type	Magnetron
Center frequency (MHz)	9450
Peak power output (kW)	200
Duty cycle (%)	0.1
Max pulse width (μs)	2.0
Transmit polarization	H+V
Max PRF (kHz)	2.7
Antenna size (m)	2.4
3-dB Beam width (Deg)	1.0
Gain (dB)	45.0
A/D (bits)	16
Receive polarization	H and V
Noise figure (dB)	< 2.0
Sampling rate (MHz)	80
Decimation factor	Adj
Video Bandwidth	Adj
Data format	Vaisala IRIS

H= Horizontal polarization
V= Vertical polarization
H+V= Simultaneously transmit horizontal and vertical polarization

Figure 2 Specification of XSAPR.

Objective

The XSAPRs will undergo upgrades on several of its sub-systems. The motivation for these upgrades is to improve the reliability and stability of radar operations. The Radar Control Processor (RCP) will be upgraded with upgrades in the positioning system and controller. In addition, the signal processing system will be upgraded to a new version of Vaisala's IRIS. There has been significant work done on the transmitters to attain stable operations. The radar systems have not been operational for research purposes for an extended time interval. The primary goal is to perform an engineering evaluation and characterization of XSAPR. The analysis for conducting the evaluation and characterization shall include but not limited to sub-system performance, signal processing performance, and system calibration.

The end-to-end characterization shall be performed in coordination and with ARM instrument mentors. Instrument mentors are ARM personnel responsible for the radars. ARM mentors have performed evaluations and measurement in the past to characterize the system. The XSAPR system must undergo similar characterization and evaluation.

Scope of Work

1. The mentors and site operations technicians shall perform the data collection, measurements and field experiments.
2. The contractor shall formulate a test plan in coordination with ARM radar engineers. The contractor shall deliver a detailed test plan for conducting the engineering evaluation of the radar.
3. The contractor shall perform analysis of data from diagnostic test procedures on electronic and microwave subsystems. The sub-systems shall include but not limited to the transmitter, antenna, control system, receiver, and data acquisition system.
4. The contractor shall perform an evaluation of the radar's transmit chain. The analysis performed shall address the pulse forming system, waveform, spectral purity, phase noise, and stability of the transmitter.
5. The contractor shall perform an evaluation of the radar's receiver chain. The evaluation of the receiver chain shall include the RF circuit in the receiver and shall include the digital receiver. The analysis performed shall address receiver calibration for all the channels, noise figure, receiver noise, and receiver response.
6. The contractor shall perform evaluation of the dual-polarized antenna. The antenna shall not be uninstalled from the radar and shall not be sent to any antenna test facility. The analysis performed shall address the performance of the antenna sub-system with measurements using test equipment, standard gain horn antenna, corner reflector, and solar observations.
7. The contractor shall perform an evaluation of data acquisition system, received signals and data variables generated by Vaisala's RVP900 receiver and IRIS software. The analysis performed shall address the quality of time series data from RVP900, products by IRIS. The products shall include spectral moments, dual polarization variables, attenuation corrected spectral moment, attenuation corrected dual-polarization variables.
8. The contractor shall provide an analysis of calibration. The analysis shall address the following:
    a. Antenna positioner calibration: pointing and level.
    b. Equivalent reflectivity factor calibration using measurements and standard targets.
    c. Differential reflectivity
    d. Use of precipitation medium for calibration and consistency.
9. The contractor shall provide an assessment of data quality for both single polarization and dual-polarization variables using direct and indirect techniques based on the properties of cloud and precipitation systems.
10. The analysis for evaluation of the XSAPR listed above from items 1 through 9 shall be performed for the three XSAPRs deployed at the ARM SGP site in Oklahoma.
11. The analysis software shall be written and delivered in Matlab or Python.

12. All figures and results delivered shall be reproducible from the source code and configuration files delivered.
13. The software code management plan shall be submitted. The plan shall address best practices, standards, version control systems, and requirements.

Parts/Sub-systems

Not Applicable.

Schedule

The engineering measurements and field experiments shall be performed on site at SGP. The exact schedule shall be determined based on availability, weather, and hardware status. A test plan shall be prepared in coordination with the radar mentors.

Shipping

Not applicable.

Deliverables

1) A detailed test plan for conducting the engineering evaluation of the radar.
2) A detailed report for the engineering evaluation documenting the results of the analysis listed in this statement of work for each of the three radars.
3) A detailed report on the assessment of calibration for each of the three radars.
4) A detailed report on the assessment of the dual-polarization data for each of the three radars.
5) All schematics, drawings, data, meta-data associated with the evaluation.
6) Complete software source code along with complete build files and configuration files for all the analysis programs and all libraries.