Pacific Northwest
NATIONAL LABORATORY
Proudly Operated by Battelle Since 1965

Tel: (509) 371-7913
Fax: (509) 371-7670
rick.dennis@pnnl.gov

November 7, 2016

IFB Number 371079

Battelle Memorial Institute, Pacific Northwest Division (Battelle) operating the Pacific Northwest National Laboratory for the U.S. Department of Energy (DOE) is interested in receiving Bids for the installation of two straddle carrier portal (SCP) RPMs and ancillary equipment installation at Pierce County Terminal (PCT) located in Tacoma, Washington.

This IFB includes the following enclosed Instructions and Contract Parts:

- Instructions and Representations
  - Invitation for Bid
  - Instructions for Bidders
- Part I – Schedule
  - Section "A" - Solicitation, Offer and Award form
  - Sections "B-H"
- Part II – Clauses
  - General Provisions for Fixed Price Construction Contracts
- Part III – Attachments
  - Div. 1
  - Construction Specifications
  - Drawings (Sets 1 & 2)
  - Representations and Certifications
  - General Wage Decision – Pierce County, Washington

Your Bid shall include:

- **Part I Schedule, Section A – Contract Form** (Solicitation, Offer and Award Form)
- **Completed & Signed Representations and Certifications**
- **Insurance:** Submit verification of possession of the insurance coverage listed in the General Provisions.
- **Bid Bond**
- **Permits and Licenses:** A Certificate of License which grants the Contractor the authority to work as a Contractor in the State, County and/or Municipality where the work is to be performed is a requirement to receive a Notice to Proceed. If Contractor does not have such license or certificate, a copy of the application for it must be submitted with an estimate of time required to obtain it.

Your Bid is due to me no later than 1:00 PM (PST), November 30, 2016. A Bid Bond is required. Attendance at the Bid opening is optional, if you cannot attend; please call in at the following number: 888-363-4749, then enter access code 3717668 when prompted.

If you have any questions, feel free to contact me at 509-371-7913 or rick.dennis@pnnl.gov.

Sincerely,

Richard D. Dennis

Richard D. Dennis
Sr. Contract Specialist

Pacific Northwest NATIONAL LABORATORY

Proudly Operated by Battelle Since 1965

IFB #371079
Invitation for Bid

Battelle Memorial Institute (Battelle) operates the U.S. Department of Energy's Pacific Northwest National Laboratory (PNNL) at Richland, Washington under Contract number DE-AC05-76RL01830.

IFB Number:	**371079**
Title:	**SCP RPM & Booth Installation at PCT**
Location:	**Tacoma, WA**
Issue Date:	**November 7, 2016**
Bid Due Date:	**November 30, 2016; 1:00 PM (PST) – Bid opening to be held in my office. Please call in to 888-363-4749 and enter code 3717668**
NAICS Code:	**236220 - Commercial and Institutional Building Construction $36.5M Size Standard**
Restriction:	**None – Full and Open Competition**
Contract Type:	**Firm Fixed Price**
Basis of Award:	**Sealed Bid**
Contractor Qualification Requirements:	***Prime Contractor* shall be pre-qualified prior to contract award; likewise, *Subcontractors to a Prime* Contractor performing work shall be prequalified prior to *starting work*.** An Experience Modification Rate (EMR) of less than or equal to 0.9 for Prime Contractor (and 1.0 for Subcontractors) and no willful OSHA/State Labor & Industries Citations over the past three years is needed to meet the pre-qualification requirement. To apply for pre-qualification, see: https://ebs.pnl.gov/. All Contractors desiring to work on U.S. DOE funded projects shall be registered in the federal registry titled "System for Award Management" (SAM) https://www.sam.gov/portal/SAM/#1 prior to being awarded a contract. Failure to register will result in Contractors disqualification.
Duration / Completion:	**Final Completion: ------March 31, 2017**
MANDATORY Prebid Meeting / Job Walk:	The MANDATORY Prebid Meeting will be conducted at 10:30 AM, Thursday, Nov. 17, 2016. Meet at the Fabulich Center, 3600 Port of Tacoma Rd., Room 110 The entrance is directly across the street from the Loves Truck Stop on Port of Tacoma Road. This is just north of HWY 99 and I5 which is just off the map to the south. The West Gate Entrance to PCT is approximately 3 blocks north. **NOTE –** The US Department of Transportation requires each on-site person carry a TSA Transportation Worker Identification Credential (TWIC). Information on obtaining a TWIC is at http://www.tsa.gov (http://www.tsa.gov/twic).
Contract Specialist:	**Name:----------Rick Dennis** **Office Phone:----------(509) 371-7913** **Cell Phone: ----------(509) 378-0461** **Fax Number: ----------(509) 371-7670** **Email Address: ---------rick.dennis@pnnl.gov**

Table of Contents

1. NAICS Classification: 236220 1
2. Commencement, Prosecution, and Completion of Work [Adapted from FAR 52.211-10 (Apr 1984)] 1
3. Amendments to Invitations for Bids [Adapted from FAR 52.214-3 (Dec 1989)] 1
4. False Statements in Bids [Adapted from 52.214-4 (Apr 1984)] 2
5. Submission of Bids 2
6. Explanation to Prospective Contractors [Adapted from FAR 52.214-6 (Apr 1984)] 2
7. Late Submissions, Modifications, and Withdrawals of Bids [Adapted from FAR 52.214-7 (Nov 1999)] 2
8. Period for Acceptance of Bids [Adapted from FAR 52.214-15 (Apr 1984)] 3
9. Preparation of Bids—Construction [Adapted from FAR 52.214-18 (Apr 1984)] 3
10. Contract Award Construction [Adapted from FAR 52.214-19 (Aug 1996)] 4
11. Pricing Conditions [Adapted from FAR 52.214-34 & 35 (Apr 1991)] 4
12. Site Investigation and Conditions Affecting the Work [Adapted from FAR 52.236-3 (Apr 1984)] 5
13. Labor Harmony 5
14. Flow-down of Contract Clauses 6
15. Bid Guarantee [Adapted from FAR 52.228-1 (Sept 1996)] 6

1. NAICS Classification: 236220

NAICS is the abbreviation for "North American Industry Classification System." NAICS was developed by the U.S., Canada, and Mexico in a joint effort to provide new comparability in statistics about business activity across North America. NAICS assigns codes to all economic activity within twenty broad sectors and is accepted and used by the Small Business Association (SBA) in determining size standards where eligibility as a small business is a factor or a consideration.

2. Commencement, Prosecution, and Completion of Work [Adapted from FAR 52.211-10 (Apr 1984)]

The Contractor shall be required to (a) commence Work under this Contract within **Seven (7) calendar days** after the date the Contractor receives the Notice to Proceed, (b) prosecute the Work diligently, and (c) complete the entire Work ready for use not later **March 31, 2017.**

3. Amendments to Invitations for Bids [Adapted from FAR 52.214-3 (Dec 1989)]

(a) If this solicitation is amended, then all terms and conditions which are not modified remain unchanged.

(b) Contractors shall acknowledge receipt of any amendment to this solicitation by

(1) identifying the amendment number and date in the space provided for this purpose on the form for submitting a Bid,

(2) letter or telegram, or

(3) facsimile, if facsimile Bids are authorized in the solicitation. Battelle must receive the acknowledgment by the time and at the place specified for receipt of Bids

4. False Statements in Bids [Adapted from 52.214-4 (Apr 1984)]

Contractors must provide full, accurate, and complete information as required by this solicitation and its attachments. The penalty for making false statements in Bids is prescribed in 18 U.S.C. 1001.

5. Submission of Bids

Electronic submittal of the Bid is required. The Bid shall be submitted electronically to: rick.dennis@pnnl.gov.

6. Explanation to Prospective Contractors [Adapted from FAR 52.214-6 (Apr 1984)]

Any prospective Contractor desiring an explanation or interpretation of the solicitation, drawings, specifications, etc., must request it in writing soon enough to allow a reply to reach all prospective Contractors before the submission of their Bids. Oral explanations or instructions given before the award of a Contract will not be binding. Any information given a prospective Contractor concerning a solicitation will be furnished promptly to all other prospective Contractors as an amendment to the solicitation if that information is necessary in submitting Bids, or if the lack of it would be prejudicial to other prospective Contractors.

7. Late Submissions, Modifications, and Withdrawals of Bids [Adapted from FAR 52.214-7 (Nov 1999)]

(a) Contractors are responsible for submitting Bids, and any modifications or withdrawals, so as to reach the Battelle office designated in the Invitation for Bid (IFB) by the time specified in the IFB. If no time is specified in the IFB, the time for receipt is 10:00 a.m., local time, for the designated Battelle office on the date that Bids are due.

(b)(1) Any Bid, modification, or withdrawal received at the Battelle office designated in the IFB after the exact time specified for receipt of Bids is "late" and will not be considered unless it is received before award is made, the Contract Specialist determines that accepting the late Bid would not unduly delay the acquisition; and—

(i) If it was transmitted through an electronic commerce method authorized by the IFB, it was received at the initial point of entry to the Battelle infrastructure not later than 5:00 p.m. one Working day prior to the date specified for receipt of Bids; or

(ii) There is acceptable evidence to establish that it was received at the Battelle installation designated for receipt of Bids and was under Battelle's control prior to the time set for receipt of Bids.

(2) However, a late modification of an otherwise successful Bid that makes its terms more favorable to Battelle will be considered at any time it is received and may be accepted.

(c) Acceptable evidence to establish the time of receipt at the Battelle installation includes the time/date stamp of that installation on the Bid wrapper, other documentary evidence of receipt maintained by the installation, or oral testimony or statements of Battelle personnel.

(d) If an emergency or unanticipated event interrupts normal Battelle processes so that Bids cannot be received at the Battelle office designated for receipt of Bids by the exact time specified in the IFB and urgent Battelle requirements preclude amendment of the IFB, the

time specified for receipt of Bids will be deemed to be extended to the same time of day specified in the solicitation on the first Work day on which normal Battelle processes resume.

(e) Bids may be withdrawn by written notice received at any time before the exact time set for receipt of Bids. If the IFB authorizes facsimile Bids, Bids may be withdrawn via facsimile received at any time before the exact time set for receipt of Bids, subject to the conditions specified in the Instruction to Contractors entitled "Facsimile Bids." A Bid may be withdrawn in person by a Contractor or its authorized representative if, before the exact time set for receipt of Bids, the identity of the person requesting withdrawal is established and the person signs a receipt for the Bid.

8. Period for Acceptance of Bids [Adapted from FAR 52.214-15 (Apr 1984)]

In compliance with the solicitation, the Contractor agrees, if this Bid is accepted within **60 calendar days** from the date specified in the solicitation for receipt of Bids, to furnish any or all items upon which prices are Bid at the price set opposite each item, delivered at the designated point(s), within the time specified in the Schedule.

9. Preparation of Bids—Construction [Adapted from FAR 52.214-18 (Apr 1984)]

(a) **Bids must be—**

(1) Submitted on the forms furnished by Battelle or on copies of those forms, and

(2) Manually signed. The person signing a Bid must initial each erasure or change appearing on any Bid form.

(b) The Bid form may require Contractors to submit Bid prices for one or more items on various bases, including—

(1) Lump sum Bid;

(2) Alternate prices;

(3) Units of construction; or

(4) Any combination of paragraphs (b)(1) through (b)(3) of this provision.

(c) If the solicitation requires proposing on all items, failure to do so will disqualify the Bid. If proposing on all items is not required, Contractors should insert the words "no Bid" in the space provided for any item on which no price is submitted.

(d) Alternate Bids will not be considered unless this solicitation authorizes their submission.

(e) **Additional Bid Requirements—**

(1) **Representations and Certifications:** Contractor shall complete and submit company representations and certifications.

(2) **Insurance:** Contractor shall submit verification of possession of the insurance coverage listed in the General Provisions.

(3) **Bid Bond** is required

(4) **Permits and Licenses:** If the Contractor possess' a current license for the state in which the work is to be performed, the Contractor shall submit the Certificate of License number; which grants them the authority to Work as a Contractor in the State, County and/or Municipality where the Work is to be performed. If Contractor does not have such license or certificate, a copy of the application for it must be submitted with an estimate of time

required to obtain it. If said license is not required by the State, County, and/or Municipality where the Work is to be performed, the Contractor shall provide documentation, in the form of a signed letter, stating that, based on licensing requirements by the State, County, and/or Municipality, (a) such licensing is not required and (b) the General Construction Contractor and Subcontractors possess appropriate authority to work where the Work is to be performed. As applicable, the documentation shall cite the official State, County, and/or Municipality reference for said authority

10. Contract Award Construction [Adapted from FAR 52.214-19 (Aug 1996)]

(a) Battelle will evaluate Bids in response to this solicitation and make award without discussions. Battelle shall award a Contract to the responsible Contractor whose Bid, conforming to the solicitation, will be most advantageous to Battelle, considering only price and possible price-related factors specified elsewhere in the solicitation.

(b) Battelle may reject any or all Bids, and waive informalities or minor irregularities in Bids received.

(c) Battelle may accept any item or combination of items, unless doing so is precluded by a restrictive limitation in the solicitation or the Bid.

(d) Battelle may reject a Bid as non-responsive if the prices proposed are materially unbalanced between line items or sub-line items. A Bid is materially unbalanced when it is based on prices significantly less than cost for some Work and prices which are significantly overstated in relation to cost for other Work, and if there is a reasonable doubt that the Bid will result in the lowest overall cost to Battelle even though it may be the low evaluated Bid, or if it is so unbalanced as to be tantamount to allowing an advance payment.

(e) If negotiations are held, the Contractor shall designate as its negotiator a person who is authorized to make legally binding commitments without further review or approval. If, for any reason, it is impractical for the Contractor to be represented at a negotiation meeting by other than a person fully authorized to act in its behalf, Battelle shall be notified sufficiently in advance to allow a decision to be made whether the negotiations should proceed as scheduled or be postponed. The Contractor's notice, if originally given orally, shall be confirmed in writing.

11. Pricing Conditions [Adapted from FAR 52.214-34 & 35 (Apr 1991)]

(a) Offers submitted in response to this solicitation shall be in the English language. Offers received in other than English shall be rejected.

(b) Offers submitted in response to this solicitation shall be in terms of U.S. dollars. Offers received in other than U.S. dollars shall be rejected.

(c) All pricing must be firm for the duration of this Contract.

(d) The quoted price(s) must include all costs to for materials, labor, equipment, testing; and any and all items of expense, fees, taxes, duties, overhead and profit for full and complete performance of the Work.

12. Site Investigation and Conditions Affecting the Work [Adapted from FAR 52.236-3 (Apr 1984)]

(a) The Contractor must take steps reasonably necessary to ascertain the nature and location of the Work, and to investigate and satisfy itself as to the general and local conditions which can affect the Work or its cost, including but not limited to—

(1) Conditions bearing upon transportation, disposal, handling, and storage of materials;
(2) The availability of labor, water, electric power, and roads;
(3) Uncertainties of weather, river stages, tides, or similar physical conditions at the site;
(4) The conformation and conditions of the ground; and
(5) The character of equipment and facilities needed preliminary to and during Work performance.

The Contractor must also satisfy itself as to the character, quality, and quantity of surface and subsurface materials or obstacles to be encountered insofar as this information is reasonably ascertainable from an inspection of the site, including all exploratory Work done by Battelle, as well as from the drawings and specifications made a part of this Contract. Any failure of the Contractor to take the actions described and acknowledged in this paragraph will not relieve the Contractor from responsibility for estimating properly the difficulty and cost of successfully performing the Work, or for proceeding to successfully perform the Work without additional expense to Battelle.

(b) Battelle assumes no responsibility for any conclusions or interpretations made by the Contractor based on the information made available by Battelle. Nor does Battelle assume responsibility for any understanding reached or representation made concerning conditions which can affect the Work by any of its officers or agents before the execution of this Contract, unless that understanding or representation is expressly stated in this Contract.

13. Labor Harmony

(a) Battelle maintains a neutral position regarding Project Labor Agreements. This Contract Work does not mandate nor preclude participation in a Project Labor Agreement if said participation promotes the economy and efficiency in Federal procurement ascribed by Executive Order titled, "Use of Project Labor Agreements for Federal Construction Projects," dated 2/6/09.

(b) In accordance with applicable prior labor agreements, laws, regulations, codes and standards, the Contractor shall furnish labor that can work in harmony with all other elements of labor employed or to be employed on the work. Without limiting the generality of the foregoing, Labor Harmony shall include the provision of labor that will not cause, cause to be threatened or give rise to either directly or indirectly, any work disruption, slowdowns or stoppages by employees of other Contractors, while performing any work or activities incidental thereto.

(c) The Contractor agrees to insert the substance of this clause, including paragraph (c), in every Subcontract issued in performance of this Contract.

14. Flow-down of Contract Clauses

(a) Any Contract resulting from this solicitation, by and between Battelle and Contractor (including all subcontractors and suppliers), for services in connection with Battelle's Management, Operation and Maintenance of the U.S. Department of Energy's Pacific Northwest Laboratory (PNNL) at Richland, Washington, under Contract DE-AC05-76RL01830 is subject to the terms and conditions of the General Provisions set forth in this solicitation. Contractor shall flow-down all terms and conditions in this solicitation in all its lower-tier subcontracts and supplier purchase orders. Clauses made inapplicable by the value, stated conditions, or type of Contract are self-deleting.

(b) The Contractor and its subcontractors at any tier are required to submit a fully executed SF 1413, Statement and Acknowledgment, upon award of each subcontract involving labor to acknowledge that the following clauses of the Contract have been included:

(1) Contract Work Hours and Safety Standards Act – Overtime Compensation – Construction
(2) Davis-Bacon Act
(3) Withholding of Funds
(4) Payrolls and Basic Records
(5) Apprentices and Trainees
(6) Compliance with Copeland Act Requirements
(7) Subcontracts (Labor Standards)
(8) Contract Termination – Debarment
(9) Disputes Concerning Labor Standards
(10) Certification of Eligibility

15. Bid Guarantee [Adapted from FAR 52.228-1 (Sept 1996)]

(a) Failure to furnish a bid guarantee in the proper form and amount, by the time set for opening of bids, may be cause for rejection of the bid.
(b) The Bidder shall furnish a bid guarantee in the form of a firm commitment, *e.g.*, bid bond supported by good and sufficient surety or sureties acceptable to Battelle, postal money order, certified check, cashier's check, or irrevocable letter of credit. Battelle will return bid guarantees, other than bid bonds—
(a) To unsuccessful Bidders as soon as practicable after the opening of bids; and
(b) To the successful Bidder upon execution of Contractual documents and bonds (including any necessary coinsurance or reinsurance agreements), as required by the bid as accepted.
(c) The amount of the bid guarantee shall be **20% percent of the bid price or $3,000,000**, whichever is less.
(d) If the successful Bidder, upon acceptance of its bid by Battelle within the period specified for acceptance, fails to execute all Contractual documents or furnish executed bond(s) within 10 days after receipt of the forms by the Bidder, Battelle may terminate the Contract for default.

(e) In the event the Contract is terminated for default, the Bidder is liable for any cost of acquiring the Work that exceeds the amount of its bid, and the bid guarantee is available to offset the difference.

Pacific Northwest NATIONAL LABORATORY

Proudly Operated by Battelle Since 1965

Part I – Schedule Contract Form - Section A

Solicitation, Offer and Award	Invitation For Bid Number: 371079	Date Issued: November 7, 2016	Page of pages 1 of 5

1. Description:

SCP RPM & Booth Installation at PCT

2. NAICS Code: 236220

3. Contract / Modification Number:

4. This Solicitation has been set aside for Small Business Concerns: YES ☐ NO ☒

5. Solicitation Method:

☒ **Invitation for Bid (IFB) - *(Sealed Bid)***
☐ **Request for Proposal (RFP) - *(Negotiated)***

6. Type of Contract:

☒ **Fixed Price** ☐ **Labor-Hour / Time-and-Material** ☐ **Cost Reimbursable** ☐ **Indefinite Quantity**

(a) SOLICITATION

Sealed offers for furnishing the supplies or services in the Schedule will be received at the place specified in box 7, or if hand-carried, delivered to the contact person in box 9 until 2:00 p.m. local time. In sealed bid solicitations "offer" and "offeror" mean "bid" and "bidder." All offers are subject to the terms and conditions in this solicitation.

7. Address Bid to:

rick.dennis@pnnl.gov

8. Bid Due Date:
November 30, 2016
1:00 PM (PST)

9. For Information Call:
Rick Dennis
Office Phone: 509-371-7913
Cell Phone: 509-378-0461
E-Mail Address: rick.dennis@pnnl.gov

10. TABLE OF CONTENTS

Invitation for Bid *(self-deletes upon award)*

Instructions to Bidders *(self-deletes upon award)*

Representations and Certifications

Part I – The Schedule

☒	**Section A**	(A) Contract Form (and Rate Sheets)
	Sections B - H	(B) Supplies or Services, (C) Description of the Work, (D) Packaging and Marking, (E) Inspection and Acceptance, (F) Deliveries or Performance, (G) Contract Administration Data, (H) Special Contract Requirements

Part II – Contract Clauses

☒	**Section I**	Contract Clauses

Part III - List of Documents, Exhibits and Attachments

☒	**Section J**	Attachments

(b) OFFER *(Completed by Offeror)*

Period for Acceptance of Offers. In compliance with the above, the undersigned agrees, if this offer is accepted within 60 **calendar days** from the date of receipt of offers specified above, to furnish any or all items upon which prices are offered at the price set opposite each item, delivered at the designated point(s), within the time specified.

11. Acknowledgement of Amendments
The Offeror acknowledges receipt of Solicitation Amendment Numbers:

1	2	3	4	5	6	7	8	9	10
☐	☐	☐	☐	☐	☐	☐	☐	☐	☐

12. Company Name and Address:

13. Name and Title of Person Authorized to Sign Offer:

Name: _____

Title: _____

14. Offer Amount: YES ☐ NO ☐
Bid Summary Attached

$

15. Authorized Signature of the Offeror:

16. Offer Date:

(c) AWARD *(Completed by Battelle)*

17. Contract Price:	18. Contract Number:	19. Contract Term:	20. Award Date:
$		Through	

21. Battelle Authorization: Your offer is hereby accepted as to the items listed above. This award consummates the contract which consists of the following documents: (a) the Battelle Solicitation, (b) your offer, and (c) this award/contract. No further contractual document is necessary.

Richard D. Dennis

(Name of Contract Specialist) ***(Signature Authorizing Award)*** ***(Date)***

B. SERVICES AND PRICES/COST

OFFER AMOUNT: The Firm Fixed Price shall be the "Bid Amount" as defined in Part I - Schedule, Section A; Box #14. Furthermore, the Bidder's "Authorized Signature" acknowledges that the Bidder has understood and the "Bid Amount" complies with performance percentages as defined in Part II, General Provisions Clause 10 "LIMITATIONS ON SUBCONTRACTING".

C. DESCRIPTION OF THE WORK

1. **GENERAL.** Contractor shall perform all construction services, and provide all material, means and methods, equipment, tools and labor, necessary to complete the Work described in and reasonably inferable from the Contract Documents.

2. **SPECIFIC.** The work includes but is not limited to the specific scope elements identified in the following:

    1. Division 1 Specification
    2. Construction Specifications
    3. Drawing No WS8933 Set 1
    4. RPM8 Radiation Portal Monitor System Installation Manual
    5. General Wage Decision No. WA 38 – Pierce County, WA
        - See http://www.wdol.gov/dba.aspx#0

3. **SEQUENCING:** Work Sequencing and Interim Completion Milestones of identified portions of the Work shall be in accordance with the "Work Sequence" requirements of Division 1.

D. PACKAGING AND MARKING

(Reserved)

E. INSPECTION AND ACCEPTANCE

Battelle has the right to inspect and evaluate the Work performed or being performed under the Contract, and the premises where the Work is being performed, at all reasonable times and in a manner that will not unduly delay the Work. If Battelle performs inspection or evaluation on the premises of the Contractor or a Subcontractor, the Contractor shall furnish and shall require Subcontractors to furnish all reasonable facilities and assistance for the safe and convenient performance of these duties.

F. PERIOD OF PERFORMANCE

1. It is anticipated the successful Bidder will receive **Notice of Award (NOA)** on or around **December 1, 2016**

    Contractor shall provide the following– Contractor is hereby advised that the following shall be provided as set forth herein, unless the parties mutually agree otherwise in writing, ***within seven (7) calendar days from NOA***

    (1) Submit **Performance and Payment Bonds** to the Contract Specialist
    (2) Standard SF1413 Form(s) to the Contract Specialist
    (3) Submit Safety & Health Plan to the Site Manager
    (4) Submit Schedule of Values to Site Manager

IMPORTANT: *The items identified herein are **not** all inclusive of technical required submittals* that may be required prior to NTP. The Contractor shall refer to Section 01100 of the Division 1 for additional items that may also be required.

2. The Contractor shall be authorized to:
   (a) Commence Work under this Contract by the issuance of a **Notice to Proceed (NTP)**, anticipated to be effective on or about **Thursday, December 8, 2016**, and will be adjusted based on the NOA date. Contractor is expected to initiate the work scope as of the NTP date.
   (b) Prosecute the Work diligently.
   (c) Complete the *Work in Phases* as set forth in the Division 1 Section 01320, and
   (d) complete the entire Work ready for use as set forth herein no later than March 31, 2017.

G. CONTRACT ADMINISTRATION

1. **GENERAL.** The Contractor is solely responsible for strict compliance with all requirements of this Contract. No notice, communication or representation in any form or from any person other than a Battelle Contracts Representative shall be effective to relieve the Contractor of such obligation or to stop Battelle from enforcing the Contract exactly according to its written terms.

2. **CONTRACT AUTHORITY.** Contracting authority in Battelle is by formal delegation to named individuals. Contract authority for this Work has been delegated to:

   Name: **Rick Dennis**
   Title: **Sr. Contracts Specialist**
   Office Phone: **509-371-7913**
   Cell Phone: **509-378-0461**
   Fax: **509-371-7670**
   Email: **rick.dennis@pnnl.gov**

   Notwithstanding any of the other provisions of the Contract, a named and authorized Battelle Contract Representative shall be the only individual on behalf of Battelle authorized to accept nonconforming Work; waive any requirement of this Contract; or take any action involving a change in the scope, price, terms, or conditions of this Contract.

3. **INTERPRETATION AND INTENT.** The Contract Documents are intended to permit the parties to complete the Work and all obligations required by the Contract Documents within the Contract Time(s) for the Contract Price. The Contract Documents are intended to be complementary and interpreted in harmony so as to avoid conflict, with words and phrases interpreted in a manner consistent with construction and design industry standards. In the event of any inconsistency, conflict, or ambiguity between or among the Contract Documents, the order of precedence shall be in accordance with the "Order of Precedence" General Provision as specified in Section H below.

   The Contract Documents form the entire agreement between Battelle and Contractor and by incorporation herein are as fully binding on the parties as if repeated herein. No oral representations or other agreements have been made by the parties except as specifically stated in the Contract Documents.

4. **INVOICING AND PAYMENT**. Submit invoices electronically to ap.invoices@pnnl.gov. Invoices may not be submitted more frequently than monthly. Payments can be made electronically by wire (foreign payments) or ACH (domestic payments) by filling out the ACH form at http://www.pnl.gov/contracts/documents/invoices.asp. Failure to comply with electronic processing may result in a delay in payment. Payments Terms are Net 30 from the date received

5. **TECHNICAL DIRECTION.** The Contractor's progress and compliance with the technical requirements of this Contract will be monitored for Battelle by a Site Manager. The Site Manager

is authorized to receive information, conduct inspections of Work in process and witness Contractor tests. He/she has no authority to: change or waive any provision of this Contract, including but not limited to statements of Work, drawings, specifications and standards, whether attached or incorporated by reference; provide interpretations of any provision or requirement of this Contract; direct, advise, or recommend any particular course of conduct on the part of the Contractor; or create any legally binding commitment on behalf of Battelle. The Site Manager for this Work will be:

Name: **Jake Horner**
Title: **PNNL Site Manager**
Office Phone: **509-371-7237**
Cell Phone: **509-438-3116**
Email: **jake.horner@pnnl.gov**

H. SPECIAL REQUIREMENTS

1. DAVIS-BACON WAGE RATE DETERMINATION

This project is federally funded. Therefore, the work has been determined to be covered by the Davis Bacon labor related clauses. The applicable wage rate determination, effective as of the issue date of this solicitation, is hereby incorporated in Part III, Section J, Attachments.

2. CONTRACTOR (I.E. PRIME CONTRACTOR AND SUBCONTRACTOR) PREQUALIFICATION — CONSTRUCTION

(a) **Contractors** must meet Battelle's minimum qualification requirements to be eligible to Contract with Battelle directly as a Prime Contractor, or participate as a **Subcontractor to a Prime Contractor** performing Work on-site. Battelle's **Prime Contractor and Subcontractor qualification requirements are posted on our Acquisition website at https://ebs.pnl.gov.** Any required supporting documents should be attached electronically and submitted with the completed Qualification Statements. Contractors will be notified by email of the acceptability of their qualifications.

(b) Prior to contract award, the **Prime Contractor shall be pre-qualified**.

(c) Prior to performing any awarded Contract Work on-site, **each Subcontractor to the Prime Contractor must be accepted** as meeting Battelle's qualification requirements.

3. Clause #4 "ORDER OF PRECEDENCE - CONSTRUCTION" in GENERAL PROVISIONS for Fixed Price Construction Contracts is hereby deleted in its' entirety and replaced by the following:

"Clause #4 Order of Precedence - Construction

Unless otherwise specified, for any inconsistency between the contract, these terms and conditions, or the specifications and drawings, the inconsistency shall be resolved by giving precedence in the following order:

The contract agreement (excluding specifications);
These General Provisions;
The Drawings and Drawing Addendums; and
The Construction Specification
Division 1 Administrative Requirements
Representations and other Instructions."

4. Controlled Unclassified Information (CUI) (cl 308 – June 2012)

Contractor agrees to properly handle all Controlled Unclassified Information (CUI) that Contractor may have access to or generate under the performance of this Contract. CUI may include 1) Applied Technology Information; 2) Naval Nuclear Propulsion Information (NNPI); 3) Official Use Only Information (OUO); 4) Personally Identifiable Information (PII); 5) Unclassified Controlled Nuclear Information (UCNI); 6) Battelle Business Sensitive Information; 7) Battelle Strictly Private Information; 8) other unclassified information requiring special handling, e.g., For Official Use Only (FOUO), Sensitive Security Information (SSI), Confidential Foreign Government Information Modified Handling Authorized (C/FGI-MOD), and Safeguards Information (SGI); or 9) facts, data, or knowledge for which the disclosure, loss, misuse, alteration, or destruction could adversely affect Battelle and Federal government interests. Contractor is responsible to properly identify, mark, protect, store, and destroy any and all CUI in accordance with applicable Battelle, DOE and Federal agency policy.

5. Environment, Safety, and Health Requirements - Offsite *(cl. 3113e – May 2012)*

A. In performing work under this contract at its own facilities or any other location that is not a DOE-owned or leased facility, the Contractor shall comply with all applicable federal, state, and local environment, safety, and health laws and regulations. The Contractor shall also perform work safely, in a manner that ensures adequate protection for employees, the public, and the environment, and shall be accountable for the safe performance of work. The Contractor shall exercise a degree of care commensurate with the work and the associated hazards. The Contractor shall ensure that management of environment, safety, and health functions and activities becomes an integral but visible part of the Contractor's work planning and execution processes.

B. The Contractor is responsible for its subcontractors' compliance with the environment, safety, and health requirements of this contract.

Use Construction General Provisions from the Contracts Website at

https://business.pnl.gov/Clauses.aspx?area=Clauses

Pacific Northwest
NATIONAL LABORATORY

Proudly Operated by Battelle Since 1965

IFB 371079
Part III – Schedule
Section J – Attached Documents

Documents Included in the Request for Proposal Package:

1. Division 1
2. Construction Specifications
3. Drawings – Rev 1
4. Drawings – Change Notice Addendum 1
5. Drawings – Addendum 1
6. RPM Installation Manual
7. Representations & Certifications
8. Davis-Bacon Wage Determination – Pierce County, WA

Sample Forms On-line:

http://www.pnnl.gov/contracts/documents/construction.asp

1. Acceptance of Completed Work
2. Certificate of Liability Insurance – ACORD 25
3. Certified Payroll - WH-347
4. Contract Release
5. Injury/Illness Report
6. Invoice Template
7. OSHA Record Keeping
8. Payment Bond – SF 25a
9. Performance Bond – SF 25
10. Request for Information
11. Statement and Acknowledgement – SF 1413
12. Submittal Form

All attachments are provided in .pdf format. You must have a .pdf viewer. A free viewer is available from Adobe Acrobat at www.adobe.com.

Division 1 Specification Sections
For Radiation Portal Monitor Project:
Pierce County Terminal, Tacoma, Washington
Straddle Carrier Portal Installation

Revision No. ___2__

Date: 24 October, 2016

Table of Contents

SECTION 01100 – SUMMARY OF WORK 2
SECTION 01300 – CONSTRUCTION ADMINISTRATION 10
SECTION 01320 – CONSTRUCTION SCHEDULING 16
SECTION 01400 – QUALITY ASSURANCE, SAFETY AND HEALTH, AND ENVIRONMENTAL PROTECTION 18
SECTION 01700 – INSTALLATION, DISMANTLING, CRATING, AND SHIPPING 21
APPENDIX A 29

SECTION 01100 – SUMMARY OF WORK

PART 1 – GENERAL

1.1 OVERVIEW

The objective of this project is to install two fully operational Straddle Carrier Portal (SCP) Radiation Portal Monitors (RPMs) at Pierce County Terminal (PCT), Tacoma, Washington. The project location at PCT is shown in Figure 1 and photographs of an SCP RPM system are shown in Appendix A.

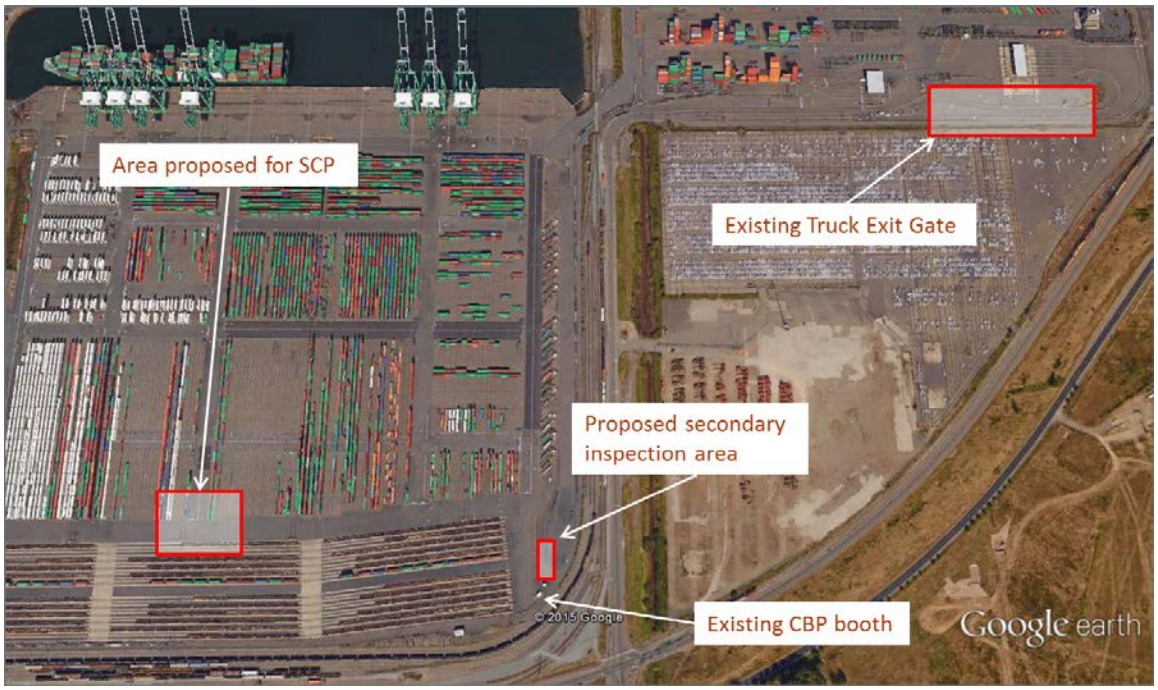

Figure 1 – Map of PCT SCP Project Site

The main work elements to be performed under this scope will include installation of two SCP RPMs, and associated equipment to support duel operability from two nearby U.S. Customs and Border Protection (CBP) booths. Traffic line revisions and construction of a new SCP RPM foundation pad will be required. Additional equipment installation at PCT will include area surveillance cameras (ASCs), VIS cameras, traffic lights, sirens/beacons, buried induction loops, and internal and external annunciators.

This scope will require work activities to be coordinated with the removal of an existing CBP booth and installation of a new 10’ x 24’ CBP booth. The removal and relocation of the existing booth and placement of the new10’ x 24’ booth will be performed by others. This contract scope will require the Contractor to complete all required connections, installation, infrastructure and booth furnishings necessary for full operations of CBP for the RPMs from the new 10’x 24’ booth, as per the design.

Pierce County Terminal Technical Work:

General Conditions:

1. All Contractor-provided (CP) equipment shall be procured at the time of Notice of Award.

2. As directed by CBP, all CP and government-furnished equipment shall be shipped to the following address:
   U.S. Customs and Border Protection
   2202 Port of Tacoma Road
   Tacoma, WA 98421

3. The Contractor shall confirm with local CBP the appropriate shipping address for CP equipment. The Contractor shall retrieve the equipment from the delivery location and transport to the project location for installation. SCP RPMs will be provided by others and will be preassembled prior to shipment in standard (40-foot) intermodal containers that will be received, transported, and placed by PCT personnel.

4. Removal of existing CBP booth at PCT rail and infrastructure modifications to accommodate new booth, including power, teleco, connecting to sewer and water will be performed by others.

5. New CBP booth will be procured, delivered, placed, and connected to utilities by others. Booth equipment and furnishings will be procured and installed per this contract and per design. Booth cabling and equipment infrastructure for the main truck exit gate RPMs and the SCP RPMs shall be installed or reconnected as designed per this contract.

6. Booth equipment and furnishings will be procured and installed per design. Booth cabling and equipment infrastructure for the main truck exit gate RPMs and the SCP RPMs shall be installed or reconnected as designed per this contract.

7. Contractor shall perform traffic revisions (i.e. remove existing markings and apply new stripping as designed) and apply new road stripping for each SCP RPM lane and the secondary inspection area as designed.

8. Contractor shall be responsible for proper disposal of all debris and spoils from excavation and trenching.

9. Construct concrete road surface and SCP RPM foundation, as designed. Field install SCP container mounting tabs per design.

10. Install all ancillary, related equipment and infrastructure for SCP RPM operations:
    - electrical power and signal cable
        - Support CBP OIT for equipment connection
    - (4) traffic lights and signage
    - (2) colored beacon systems, one per lane

- (6) VIS cameras and associated lighting, three per SCP RPM lane (pre-installed in SCP containers)
- (7) ASCs
  - ASC computer, (1) MaxPro NVR, and (2) monitors in the new CBP booth
  - **NOTE**: The design drawings call for a digital video recorder (DVR). This has been modified, please procure and supply the following MaxPro SE series NVR Hybrid part number: HHSE32C1601T
- (4) induction loops and controllers
- (2) external annunciators at SCP RPMs
- (6) internal annunciators: two (2) for SCP RPMs located at the main truck exit gate booth and four (4) located at the new rail booth (two for SCP RPMs and two for main truck exit gate RPMs)
- bollards, foundations, and K-rails, as required

Underground trenching and existing conduit for power and fiber is shown in the drawings.

11. Provide professional engineering or testing services, as required, including: hidden utilities and structures scanning, prior to any excavation cable connectivity, prior to installer departure soil testing and disposal, per local requirements.

12. All personnel shall wear safety equipment (shoes, vests, hard hats) as necessary and/or required. Lock-out/tag-out procedures shall be in place during electrical work, as appropriate. SCP RPMs do not emit radiation, x-rays, or other emissions and are strictly passive devices. The Contractor does not need SCP RPM experience.

13. Transportation worker identification credential (TWIC) and CBP vetting for onsite personnel may be required. In advance of construction Notice to Proceed (NTP), the Contractor shall provide Pacific Northwest National Laboratory (PNNL) with the names and contact information, as requested by CBP, for all personnel working onsite.

14. The PNNL Site Manager shall be onsite or on call to provide technical assistance.

15. Project will be conducted under a single prime contract.

16. Location of work site:

Physical work address	**Equipment shipping address**
4015 State Route 509 North Frontage Road Tacoma, WA 98421	U.S. Customs and Border Protection 2202 Port of Tacoma Road Tacoma, WA 98421

17. Terminal Hours:
    - RPM Operations: 7AM – 5PM
    - Terminal Operations: 24 hours a day / 7 days a week

1.2 WORK COVERED BY CONTRACT DOCUMENTS

A. Project Title: Pierce County Terminal Straddle Carrier Portal.

B. Battelle operates the PNNL for the U.S. Department of Energy. The names "Battelle" and "PNNL" are used interchangeably.

Refer to the Contract Documents, Part I – Schedule, for additional information, including PNNL's contract point of contact, the Contracts Specialist, and the technical point of contact, the Technical Oversight Representative. (NOTE: Site Manager is used interchangeably with Technical Oversight Representative in this document; Contracting Authority is used interchangeably with Contracts Specialist.)

C. Local Building Code Jurisdiction: City of Tacoma, Washington. Permits are required for this project. A&E will secure permits; Contractor is responsible to pay for and pull permits ($11,000) before NTP.

D. Construction Management support is provided by the PNNL Site Manager (or designee).

1.3 ROLES AND RESPONSIBILITIES

A. CBP, Integrated Logistics Branch, is the owner of the RPM systems. PNNL will coordinate with local CBP and coordinate activities with local stakeholders as required.

B. PNNL

1. Provides this general specification (i.e., Division 1) with attached design drawing sets to identify scope.

2. Acts as the contracting agency for the project.

3. Oversees technical compliance with work specification during installation and removal activities.

4. Provides shipping labels to be affixed by Contractor on RPM equipment to be loaded on truck prior to transportation.

C. Contractor

1. Completes RPM installation and relocation activities of booth RPM components per this Division 1, Specification and detailed design drawings/sketches, including

a. Complete disassembly, removal, and installation as provided in Section 01700.
b. Provide all materials and equipment required to complete disassembly, removal, and disposal of potentially demolished and/or abandoned equipment or spoils, as necessary.

c. Provide all materials and equipment required to complete installation of RPM systems, and RPM equipment.
d. Coordinate all removal and installation activities with PNNL and owner. PNNL will coordinate activities with CBP as required.
e. Provide written schedule with dates for completion of RPM installation and RPM equipment installation. In addition, schedule for disposal/removal of required equipment. Schedule must be in compliance with phasing stipulations outlined in Sections 1320 and 1700.
f. Obtain written approval from the PNNL Contracts Specialist or authorized representative for scope or cost changes before any changes are implemented.
g. Identify any local jurisdiction, code compliance, or technical issues that may impede work.
h. Provide final marked-up (red-line) drawing to PNNL identifying any changes from the information shown on the drawings for work and site configuration.

1.4 WORK SCHEDULE

All field work relating to equipment installation, removal and site restoration is to be completed in accordance within the contract-specified period of performance number of days after commencement of work. Refer to Section 01320 – Construction Scheduling.

1.5 PNNL CONTACTS

Refer to Part 1 Schedule; Section G – Contract Administration.

The PNNL Site Manager/Construction Manager and the PNNL Senior Contracts Specialist will be identified in the contracting documents.

1.6 SUBMITTAL LIST

Provide the following submittals:

Submittal #	Brief Description	Const. Sched	Sched Values	When Due	When Due	Planned Response
1	Submit bonds, insurance, subcontractors, and inspectors.	No	Yes	Before NTP	NTP-7	I&R
2	Order and submit purchase order for detector and annunciator cable.	Yes	Yes	Before NTP	NOA+7	I&R
3	Submit Const Schedule, if not integrated into the Activities Plan.	Yes	Yes	Before NTP		
4	Submit Schedule of Values, if not integrated into the Activities Plan.	No	Yes	Before NTP	NTP-7	I&R
5	Submit QA documentation.	No	Yes	Before NTP	NTP-7	I&R
6	Submit Safety & Health Plan.	No	Yes	Before NTP	NTP-7	I&R
7	Submit site-specific regulatory documents.	No	Yes	Before NTP	NTP-7	I&R
8	Pull building/electrical permits, submit copy 2.	No	Yes	Before NTP	NTP-7	I&R
9	Submit request to 'U-Dig" agency and copy agency acknowledgement to PNNL.	Yes	Yes	Before NTP	NTP-7	I&R
10	Submit qualifications of scanning service.	No	Yes	Before NTP	NTP-7	I&R
11	Submit qualifications: fill testing agency.	No	Yes	Before NTP	NTP-7	I&R
12	Submit 1) fill fabric, 2) warning tape, 3) fill plant's mix design.	No	Yes	Before NTP	NTP-7	I&R
13	Submit qualifications: asphalt testing agency.	No	Yes	Before NTP	NTP-7	I&R
14	Submit 1) asphalt plant's mix design and test results, 2) herbicide instructions.	No	Yes	Before NTP	NTP-7	I&R
15	Submit qualifications: concrete testing agency/inspector.	No	Yes	Before NTP	NTP-7	I&R
16	Submit concrete plant's mix design.	No	Yes	Before NTP	NTP-7	I&R
17	Submit shop drawings for concrete rebar.	No	Yes	Before NTP	NTP-7	I&R
18	Submit welder's certification for minor welds, including RPM base plates corner plates, k-rail sign saddles, and field welding.	No	Yes	Before NTP	NTP-7	I&R

Submittal #	Brief Description	Const. Sched	Sched Values	When Due	When Due	Planned Response
19	Submit welding procedures & certifications for structural welding, including welded booth foundation tabs and conduit bridges.	No	Yes	Before NTP	NTP-7	I&R
20	Submit cable product data. No substitutions allowed except as noted in Div1.	Yes	Yes	Before NTP	NTP-7	I&R
21	Submit notice of utility interruptions 2 days before.	No	Yes	Post-NTP	CS	Response
22	Submit notice of layout results and completion, including U-Dig and scanning results, in DR.	No	Yes	Post-NTP	CS	I&R
23	Submit inventory of salvaged items.	No	Yes	Post-NTP	Immdtly	I&R
24	Submit fill test reports.	No	Yes	Post-NTP	Immdtly	I&R
25	Submit asphalt test results.	No	Yes	Post-NTP	Immdtly	I&R
26	Submit concrete delivery tickets.	No	Yes	Post-NTP	Immdtly	I&R
27	Submit 7-day concrete test results to PNNL and concrete plant.	No	Yes	Post-NTP	Immdtly & DR.	I&R
28	Submit 28-day concrete test results.	No	Yes	Post-NTP	Immdtly & DR.	I&R
29	Submit adhesive documentation in DR.	No	Yes	Post-NTP	Immdtly & DR.	I&R
30	Submit inspection reports.	No	Yes	Post-NTP	Immdtly & DR.	I&R
32	Submit cable schedules for eqpt. rooms.	No	Yes	Post-NTP	CS	I&R
33	Submit labeling schedules for electrical panels.	No	Yes	Post-NTP	CS	I&R
34	Submit occupancy permits, electrical inspection releases, etc.	No	Yes	Post-NTP	Subsntl Cmpltn	I&R
35	Submit fiber optics test results.	No	Yes	Post-NTP	Immdtly	I&R
37	Submit testing and adjusting results for low voltage transformers.	No	Yes	Post-NTP	Immdtly	I&R
38	Deliver keys for padlocks.	No	Yes	Post-NTP	Subsntl Cmpltn	I&R
39	Deliver tools, parts, materials.	No	Yes	Post-NTP	Subsntl Cmpltn	I&R
40	Submit Exceptions list (Punch List) for Substantial Completion & request verification.	No	Yes	Post-NTP	Subsntl Cmpltn	I&R

Submittal #	Brief Description	Const. Sched	Sched Values	When Due	When Due	Planned Response
41	Submit Project Record Documents.	Yes	Yes	Post-NTP	Final Cmpltn	Response
42	Submit warranties, bonds, maintenance service agreements, certifications, etc.	No	Yes	Post-NTP	Final Cmpltn	I&R
43	Submit Vendor Info for Cameras and accessories.	No	Yes	Post-NTP	Final Cmpltn	I&R
44	Submit Vendor Info for Electronic cabinets.	No	Yes	Post-NTP	Final Cmpltn	I&R
45	Submit Vendor Info for Transformers.	No	Yes	Post-NTP	Final Cmpltn	I&R
46	Submit HVAC test and balance report.	No	Yes	Post-NTP	Final Cmpltn	I&R
47	Submit Vendor Info for Heating and cooling equipment.	No	Yes	Post-NTP	Final Cmpltn	I&R
48	Submit contract closeout (final billing, release of liens, etc.).	No	Yes	Post-NTP	Final Cmpltn	Response
49	Submit Exceptions list (Punch List) for Final Completion and request verification.	No	Yes	Post-NTP	Final Cmpltn	Response

NTP = Notice to Proceed
Response = PNNL plans a written response.
I&R = for PNNL's information and record. No PNNL response planned.
CS = Construction Start
DR = Daily Report

END OF SECTION 01100

SECTION 01300 – CONSTRUCTION ADMINISTRATION

PART 2 – PART 1 – GENERAL

1.1 SUMMARY

A. This section includes the following administrative and procedural requirements:

1. Request for Information (RFI)
2. Submittals
3. Sensitive Information
4. Contractor Support of PNNL Forces
5. PNNL Hold Points
6. Daily Contractor Report
7. Special Inspections
8. Proposals and Changes

PART 3 – PART 2 – PRODUCTS (NOT USED)
PART 4 – PART 3 – EXECUTION

3.1 REQUEST FOR INFORMATION

An RFI is a written, documented administrative method by which the Contractor can request clarification and/or direction from PNNL on contract requirements. An RFI is not a change document, therefore, do not make or infer changes to the contract work based on a PNNL response to an RFI *except when PNNL uses an RFI to accept a Substitution Request*.

A. RFI Form. Submit Requests for Information on the PNNL RFI form located at http://www.pnl.gov/contracts/documents/construction.asp. Maintain RFI log and PNNL responses, and keep RFIs and log available to PNNL's onsite representatives.

B. RFI Process. Submit RFIs in writing to the project Site Manager, in clear concise language and in sufficient detail to fully describe the issue. Review RFIs from sub-tier contractors and, if appropriate, submit to PNNL in accordance with this specification. When addressing an unknown or unanticipated issue, the RFI should include Contractor's professional recommendation, or options as appropriate with recommendations, on how to best address the issue.

C. RFI for Substitution Request: Submit one (1) request for each request on an RFI form. Include the words "Substitution Request" in the title and file-name of the RFI and in the subject of the email transmitting the RFI to PNNL. Identify product or fabrication or

installation method to be replaced. Include specification section number and title and drawing numbers and titles.

3.2 SUBMITTALS

A. Coordination: Coordinate preparation and processing of submittals with performance of construction activities.

1. Coordinate each submittal with fabrication, purchasing, testing, delivery, other submittals, and related activities that require sequential activity.

2. Coordinate transmittal of different types of submittals for related parts of the work so processing will not be delayed because of need to review submittals concurrently for coordination.

a. PNNL reserves the right to withhold action on a submittal requiring coordination with other submittals until related submittals are received.

B. Processing Time: Allow enough time for submittal review, including time for re-submittals, as follows. Time for review shall commence on PNNL's receipt of submittal.

1. Initial Review: Allow four (4) calendar days for initial review of each submittal. Allow additional time if processing must be delayed to permit coordination with subsequent submittals. PNNL will advise Contractor when a submittal being processed must be delayed for coordination.

2. Resubmittal Review: Allow four (4) calendar days for processing each resubmittal.

3. Lack of Timely Submittal: No extension of the contract time will be authorized because of failure to transmit submittals enough in advance of the work to permit processing.

C. Transmittal: Email submittals directly from the Contractor to PNNL as Acrobat PDF, Excel, or Word files unless PNNL requests otherwise for a particular project or submittal. Package each separate submittal in its own email with any attachments and in the email format noted below. PNNL may reject submittals received from sources, including subcontractors. Prepare the email as the submittal cover sheet as follows:

1. Email Subject Line: Enter a brief project name, the submittal number per the Submittal Log, the submittal revision number, and a brief submittal title, as illustrated in the following example:
Port_Alpha,_Submittal_123,_Rev1,_Fiber_Cable.

2. Email Body: Enter the information as indicated in the following email template, which includes example input. Use plain text format, and include the PNNL response section shown in the template. In the "Certification" field, certify that

that submittal complies with the contract or note proposed variances from the contract.

```
Contractor's Input
Spec:              01-1300 3.12, Drawing General Note 8.1
Response Plan:     Information & Record per Submittal Log
Certification:     These attached submitted items comply with the
                   contract.
OR:                These attached submitted items comply with the
                   contract.
Contractor:        Acme Construction, Contract #12345
Preparer:          John Doe, Best Electric, (509) 123-4567
Due:               x/x/15 (per PNNL-accepted Activities Plan)
Delivered:         See date of Contractor's email to PNNL.

PNNL Response
Reviewer, Date:
Disposition:       []No exceptions taken.
                   []Exceptions taken; no resubmittal.
                   []Exceptions taken; revise & resubmit.
                   []Rejected; revise & resubmit.
                   []Other, see notes below.
Notes:
CM, Date:
SM, Date:          Not applicable.
Other, Date:       Not applicable.
Emailed:           See date on PNNL's email to Contractor.
```

D. Deviations: Highlight, encircle, or otherwise identify in the body of the submittal any deviations from the Contract Documents. Submit product substitution requests on an RFI form.

E. Product Data Submittals: Attach product data or cut sheets to the submittal email. Include specification section number and title and drawing numbers and titles.

1. Product data submittals shall include performance, electrical, dimensional, accessories, make and model number for the equipment at a minimum. Enough information must be provided to determine the appropriateness, fit and function of the equipment within the system.

F. Manufacturers' Data Sheets: Where product data contain manufacturers' standard data, include only sheets pertinent to product or component installed. Mark each sheet to identify each product or component incorporated into the work. If data include more than one item in a tabular format, identify each item using appropriate references from the Contract Documents. Identify data applicable to the work and delete references to information not applicable.

G. Compatibility of Options: If Contractor is given option of selecting between two or more products for use on project, product selected shall be compatible with products previously selected, even if previously selected products were also options.

1. Each Contractor is responsible for providing products and construction methods compatible with products and construction methods of other contractors.

2. If a dispute arises between contractors over concurrently selectable but incompatible products, PNNL will determine which products shall be used.

H. Contractor Review

1. Review each submittal and check for accuracy completeness and compliance with the Contract Documents before submitting.

I. PNNL Review

1. Response Submittals: PNNL will review each submittal, and make marks to indicate corrections or modifications required, and return the marked-up submittal to the Contractor. PNNL will reply to "Response Required" submittals and indicate PNNL's disposition of the submittal and any subsequent actions required by the Contractor as follows:

a. No Exception Taken: PNNL found nothing within the submittal that requires rework to the submittal.

b. Exception Taken as Noted – No Resubmittal Required: PNNL has found and marked-up discrepancies within the submittal. Contractor shall make corrections as noted, but is not required to resubmit the package to PNNL.

c. Exception Taken as Noted – Resubmittal Required: PNNL has found and marked-up discrepancies within the submittal; Contractor shall make corrections as noted and resubmit the package to PNNL.

d. Reject – Revise and Resubmit: Submittal is rejected in its entirety or has not been transmitted per these specifications; Contractor shall remedy the discrepancy and resubmit the entire package.

2. Information and Record (I&R) Submittals: PNNL will review each submittal without returning any disposition to the Contractor, unless the submittal does not comply with requirements, in which case the submittal will be rejected and returned.

3.3 SENSITIVE INFORMATION

Construction drawings and documents may be marked "For Official Use Only" or "FOUO."

J. Ensure that Contactor and subcontractor personnel protect these FOUO drawings as noted on those documents.

K. Sensitive information also includes personal information, such as social security numbers, salary or pay rates, driver license numbers, and health records that the email or

document connects to an individual by name. Contractor should avoid placing this information, where required, directly into an email, but instead transmit in a password-protected Word or Excel file.

3.4 CONTRACTOR SUPPORT OF PNNL FORCES

A. Provide 40 hours labor and equipment to enable PNNL forces to examine or verify the work and to access equipment such as underground vaults, booth roof tops, and elevated camera; as well as to commission and trouble-shoot completed work. This work typically occurs prior to and during the final SCP RPM system turn-over period. This work may include installation of additional equipment and direct support of PNNL forces in the diagnostics and repair of equipment. It may also require the termination or re-termination of communications, fiber optic, or power cable connections.

B. Replace CP equipment or components identified as failures during trouble-shooting.

3.5 PNNL HOLD POINTS

A. A PNNL hold point is a planned and specified point in the sequence of work to allow PNNL technical staff to observe the specified work.

B. Hold points are as follows:

1. Layout inspection (including mark and locate) and approval prior to commencement of excavation.

2. PNNL observes site preparation for foundation excavation and assembly inspection prior to scheduling concrete.

3. Concrete strength test inspection prior to setting up SCP RPM system.

4. PNNL observes trench excavation inspection prior to filling trench.

5. PNNL observes site preparation for concrete placement.

6. PNNL observes site preparation for hotmix asphalt concrete (HMAC) placement.

7. PNNL observes container twist lock placement prior to installation.

8. All wire and cable to be inspected prior to installation.

9. PNNL observes completed electrical before concealment.

10. PNNL reviews electrical test reports (power and signal cable) before electrical Contractor is released.

11. PNNL reviews fiber test reports before fiber Contractor is released.

C. Before notifying PNNL that a portion of the work is ready for PNNL's observation, complete the work up to that point.

D. Document PNNL's observations in the Daily Report.

E. Resume work on that portion of work after PNNL has observed the work.

F. PNNL Site Manager may elect to not observe the hold point, and task the Contractor with other methods of verification, such as photographs, and direct the Contractor to resume work.

3.6 DAILY CONTRACTOR REPORT

A. Prepare a daily construction contract report (format TBD by Contractor and submit it daily to record the following information:

1. List of Contractor's personnel at project site, including subcontractors.

2. Work completed and planned (including hold points).

3. Weather conditions and issues potentially impacting project.

4. Photos of progress.

3.7 SPECIAL INSPECTIONS

A. Provide the special inspections noted in the drawings and specifications using experienced and certified individuals as required by the International Building Code, 2000, Chapter 17, Structural Tests and Special Inspections and Contract Documents. Special inspections are in addition to those by the local code enforcement agency. Document and submit the inspections and tests results to PNNL prior to requesting acceptance of work. Note the results of each day's inspections and tests in the Contractor Daily Report.

3.8 PROPOSALS AND CHANGES

A. When the Contractor considers a PNNL order or instruction to be a change, immediately submit a written notice to the Contracts Specialist stating the Contractors position in accordance with the "changes provision" in the contract.

B. When submitting a proposal, include only the changes that have been clearly identified in writing as acceptable changes by PNNL or as changes in the Contractor's proposal cover letter and cost documentation.

END OF SECTION 01300

SECTION 01320 – CONSTRUCTION SCHEDULING

PART 5 – PART 1 – GENERAL

1.1 CONSTRUCTION SCHEDULE

Construction will include installation of two SCP RPMs (lane 1 and lane 2), all civil and structural infrastructures, and all final equipment installation activities, as designed and per contract.

A total of ***"50" work week days*** will be the maximum onsite work period for all construction activities related to the approved design. The construction start date is currently scheduled for January 16th. Actual construction start date and SCP RPM system delivery date will be confirmed upon notice to proceed.

All construction activities must be coordinated with PNNL. Contractor's detailed phasing schedule shall comply with these guidelines:

NTP Day 1-2:

- Pre-construction and site walk down meeting with stakeholders, owners, and CBP.
- Safety briefing (should occur daily throughout construction).
- Construction start – CP equipment arrives on site.
- Begin SCP RPM work.
  - Site layout for PCT.

General Constraints:

- All work shall be scheduled and coordinated with PNNL to ensure that there are NO interruptions to CBP and PCT operations.
- Evening and/or weekend work may be required.
- Schedule and coordinate all activities with PNNL.
- All cabled connections and equipment installations that disrupt CBP's operation of the main truck exit gate RPMs shall occur outside of main truck exit gate operating hours.
- Transport of all government furnished equipment (GFE) and CP equipment from CBP receiving shall be managed by the Contractor.

Preparation and equipment installation activities:

Initial construction activities at PCT to include the following:

- Mark traffic revisions and secondary inspection area.
- Pave roads and install SCP RPM foundations.
- Install ancillary equipment and all necessary infrastructure and booth furnishings.
- Install SCP RPM systems (See Appendix A).

Construction completion activities at SCP include the following:

- Finalize the installation of all ancillary and related equipment at each booth and at each SCP RPM, per design.
- Complete power, fiber and communication cabling and testing.
- Support PNNL in final SCP RPM installation activities, functionality testing, and "soft" go-live.
- Support "soft" go-live (i.e. system start-up and integration testing).
- Go-live – 48-hour test starting when official operations begin.

All remaining Contractor installation tasks shall be completed during this phase.

Final Completion:

- Site clean-up (removal of spoils and debris, etc.).
- Submit red-line drawings to PNNL.
- Conduct and complete site acceptance with PNNL.

NOTE: All specified "days" are calendar days unless noted otherwise for a specific item.

END OF SECTION 01320

SECTION 01400 – QUALITY ASSURANCE, SAFETY AND HEALTH, AND ENVIRONMENTAL PROTECTION

PART 6 – PART 1 – GENERAL

This section includes requirements for quality assurance, quality control, personal safety and health, and environmental protection.

1.1 QUALITY ASSURANCE

A. PNNL maintains a deficiency reporting system to identify contract non-conformances that are not reported by the Contractor. If PNNL identifies and documents nonconforming material and/or work, then PNNL will provide the Contractor written notification of the nonconformance and a disposition. Do not proceed with the item or work identified by a PNNL nonconformance report until PNNL provides the disposition.

1.2 SAFETY AND HEALTH

A. Submit Contractor Safety and Health Plan that addresses the safety and health requirements of the "Environment, Safety and Health Requirements" clause, as specified in the contract. Submit the documentation for record and information after contract award, but prior to performing work.

B. Maintain a written Safety and Health Program in compliance with the following regulations:

1. Code of Federal Regulations (CFR)

a. 29 CFR, Part 1910: Occupational Safety and Health Administration (OSHA) General Industry and Health Standards

b. 29 CFR, Part 1926: OSHA Construction Industry Standards, including Subpart P; Excavations.

2. National Fire Protection Association (NFPA)

a. NFPA 70, National Electric Code

b. NFPA 70E, Electrical Safety Requirements for Employment Work Places

c. NFPA 241 Standard for Safeguarding Construction Alteration and Demolition, 2000 Edition.

3. International Building Code

C. Site Safety Supervisor: Prior to commencing onsite work, identify a member of Contractor's key supervisory staff as the designated "Site Safety Supervisor."

Copies of the following documents shall be maintained at the jobsite for PNNL review: safety inspections, employee orientations, training records, safety meeting records, and competent person designations.

D. Safety Meetings: Prior to commencing construction, assemble the representatives of the Contractor's team, including the General Superintendent and Site Safety Supervisor, and meet with PNNL to review the contract's Safety and Health requirements.

Advise PNNL of any special safety restrictions it has established so that PNNL and other project or site personnel can be notified of these restrictions.

Daily Safety Briefing: Prior to commencement of work each day, conduct a safety briefing with all employees and the Site Manager to discuss the work planned for that day and identify any potential safety concerns. The Site Safety Supervisor shall also conduct an end-of-day site safety check and ensure the area is left in a safe condition.

E. Emergency Notifications: Post emergency first aid information and emergency telephone numbers at the work site. Use "911" for emergency police/fire/rescue unless directed otherwise by site owners or other authority.

Immediately report emergencies, injuries, accidents, spills, and other unusual activities related to safety, health, and the environment to the following organizations in order as listed.

1. the local, governing jurisdiction

2. CBP

3. PNNL – Call each of the following contacts in the order listed until the Contractor has personally and directly talked with a PNNL representative:

   a. PNNL's point of contact at the site

   b. PNNL's Contracting Authority noted in the Contract Documents

F. Emergency Suspension of a Portion of Work: When anyone identifies a safety, health, or environmental concern, immediately evaluate the concern and determine the appropriate response.

1.3 ENVIRONMENTAL PROTECTION

A. Review the "Environment, Safety and Health Requirements" and "Solid Waste Management" General Provisions of the contract.

B. Manage hazardous waste generated or accumulated onsite and dispose of the waste in accordance with the requirements of 40 CFR 262, EPA Standards applicable to Generators of Hazardous Waste and applicable state and local regulations.

C. Contractor will provide dust, spill and effluent control plan using industry best management practices.

END OF SECTION 01400

SECTION 01700 – INSTALLATION, DISMANTLING, CRATING, AND SHIPPING

PART 7 – PART 1 – GENERAL

The tasks in this section are required to be performed by the construction Contractor unless otherwise noted. The following information shall be used as a guide for the construction process.

PART 8 – PART 3 – EXECUTION

3.1 EXAMINATION

A. Existing Conditions: Before beginning work, investigate and verify the existence and location and connections of mechanical and electrical systems and other construction affecting the work. All soil sampling and required testing of soil to be excavated shall be conducted prior to excavation.

B. Existing Utilities: Before beginning site-work, investigate and verify the existence and location of underground utilities and other construction affecting the work or that could be affected by the work.

1. Verify the location and invert elevation at points of connection of sanitary sewer, storm sewer, water-service piping, and underground electrical services.

2. Submit location data for work related to project that must be performed by public or private utilities serving the project site.

C. Hidden Utilities and Structures: Before beginning site-work, investigate and verify the existing location of all utilities and other structures in the ground or within above-grade structures that are hidden from direct observation that could affect the work or that could be affected by the work. This investigation includes the following work:

1. Review drawings on site with the site owner's and lessee's personnel who are cognizant of the site construction history and have the owner's and lessee's documentation of existing conditions (AKA, as-built or record drawings).

2. Submit a request to the public and private utilities serving the site to locate their buried lines and systems. Some public utilities use a centralized utility locator agency, often referred to as "U-Dig." Provide a copy of the submitted request and the utilities' acknowledgement of the request.

3. Scan the hidden areas using a private professional scanning service, including the use of the following technologies:

a. active radiofrequency generation on metallic lines or cables

b. passive radiofrequency monitoring

c. ground-penetrating radar

d. metal detection.

Request the owner/lessee to activate any photo cell or timer circuit that may be related to the excavation area while conducting the scans noted above, if owner/lessee does not activate circuits, notify PNNL before beginning scan.

4. Identify additional infrastructure that may not have been marked.

5. Develop a lock and tag procedure based on these investigations, on discussions with CBP and the site owner/lessee, on site drawings, scan reports, and other available information.

6. Request the owner/lessee to lock and tag power sources within excavation area. If owner/lessee does not lock and tag, notify PNNL before beginning excavations.

D. Acceptance of Conditions: Examine substrates, areas, and conditions, with installer or applicator present where indicated, for compliance with requirements for installation tolerances and other conditions affecting performance. Record the observations.

1. Proceed with installation only after unsatisfactory conditions have been corrected. Proceeding with the work indicates acceptance of surfaces and conditions.

3.2 PREPARATION

A. Existing Utility Interruptions: Do not interrupt utilities serving occupied facilities unless permitted under the following conditions, and then only after arranging to provide temporary utility services.

1. Notify PNNL and the site owners not less than two (2) normal business days in advance of proposed utility interruptions.

2. Do not proceed with utility interruptions without PNNL's and the site owner's written permission.

B. Field Measurements: Take field measurements as required to fit the work properly. Re-check measurements before ordering and installing each product. Where portions of the work are indicated to fit to other construction, verify dimensions of other construction by

field measurements before fabrication. Verify all cable lengths and document variances in daily reports.

C. Space Requirements: Verify space requirements and dimensions of items shown diagrammatically on drawings.

D. Review of Contract Documents and Field Conditions: Immediately on discovery of the need for clarification of the Contract Documents, submit an RFI to PNNL, outlined in Section 01300, 3.1. Include a detailed description of problem encountered, with recommendations for changing the Contract Documents.

3.3 CONSTRUCTION LAYOUT

A. Verification: Before proceeding to lay out the work, verify layout information shown on drawings. Verify property survey and existing benchmarks if provided by PNNL for laying out the work. If discrepancies are discovered, notify PNNL promptly following the RFI process outlined in Section 01300, 3.1.

B. General: Use accepted surveying practices. If required by PNNL on individual projects, engage a land surveyor or professional engineer to lay out the work.

1. Establish benchmarks and control points to set lines and levels at each story of construction and elsewhere as needed to locate each element of project.

2. Establish dimensions within tolerances indicated. Do not scale drawings to obtain required dimensions.

3. Inform installers of lines and levels to which they must comply.

4. Check the location, level and plumb, of every major element as the work progresses.

5. Notify PNNL when deviations from required lines and levels exceed allowable tolerances.

6. Close site surveys with an error of closure equal to or less than the standard established by authorities having jurisdiction.

3.4 FIELD ENGINEERING

A. If PNNL relies on existing benchmarks, control points, and property corners to layout the work, then PNNL will identify those points on the drawings and mark them as for layout.

B. Reference Points: Locate existing permanent benchmarks, control points, and similar reference points before beginning the work. Preserve and protect permanent benchmarks and control points during construction operations.

1. Do not change or relocate existing benchmarks or control points without prior written approval of the site owners. Report lost or destroyed permanent benchmarks or control points promptly. Report the need to relocate permanent benchmarks or control points to PNNL before proceeding.

2. Replace lost or destroyed permanent benchmarks and control points promptly. Base replacements on the original survey control points.

3.5 INSTALLATION

A. General: Locate the work and components of the work accurately, in correct alignment and elevation, as indicated.

1. Make vertical work plumb and make horizontal work level.

2. Where space is limited, install components to maximize space available for maintenance and ease of removal for replacement.

3. Conceal pipes, ducts, and wiring in finished areas, unless otherwise indicated.

4. Maintain minimum headroom clearance of 2.4 m (8 feet) in spaces without a suspended ceiling.

B. Comply with manufacturer's written instructions and recommendations for installing products in applications indicated.

C. Install products at the time and under conditions that will ensure the best possible results. Maintain conditions required for product performance until substantial completion.

D. Conduct construction operations so no part of the work is subjected to damaging operations or loading in excess of that expected during normal conditions of occupancy.

E. Tools and Equipment: Do not use tools or equipment that produces harmful noise levels without proper hearing protection.

F. Anchors and Fasteners: Provide anchors and fasteners as required to anchor each component securely in place; accurately locate and align with other portions of the work.

1. Mounting Heights: Where mounting heights are not indicated, mount components at heights directed by PNNL.

2. Allow for building movement, including thermal expansion and contraction.

G. Joints: Make joints of uniform width. Where joint locations in exposed work are not indicated, arrange joints for the best visual effect. Fit exposed connections together to form hairline joints.

H. Hazardous Materials: Use products, cleaners, and installation materials that are not considered hazardous.

3.6 PROGRESS CLEANING

A. General: Clean the project site and work areas daily, including common areas. Coordinate progress cleaning for joint-use areas where more than one installer has worked. Enforce requirements strictly.

1. Comply with requirements in NFPA 241 for removal of combustible waste materials and debris.

2. Do not hold materials more than seven (7) calendar days during normal weather or three (3) calendar days if the temperature is expected to rise above 80ºF.

3. Containerize hazardous and unsanitary waste materials separately from other waste.

B. Site: Maintain project site free of waste materials and debris.

C. Work Areas: Clean areas where work is in progress to the level of cleanliness necessary for proper execution of the work.

1. Remove liquid spills promptly.

2. Where dust would impair proper execution of the work, broom clean or vacuum the entire work area, as appropriate.

D. Installed Work: Keep installed work clean. Clean installed surfaces according to written instructions of manufacturer or fabricator of product installed, using only cleaning materials specifically recommended. If specific cleaning materials are not recommended, use cleaning materials that are not hazardous to health or property and that will not damage exposed surfaces.

E. Concealed Spaces: Remove debris from concealed spaces before enclosing the space.

F. Exposed Surfaces: Clean exposed surfaces and protect as necessary to ensure freedom from damage and deterioration at time of substantial completion.

G. Cutting and Patching: Protect the surfaces of equipment prior to cutting or patching. Clean areas and spaces where cutting and patching are performed. Completely remove paint, mortar, oils, putty, and similar materials.

H. Waste Disposal: Burying or burning waste materials onsite will not be permitted. Washing waste materials down sewers or into waterways will not be permitted.

I. Protective Coatings: Apply protective covering where required to ensure protection from damage or deterioration at substantial completion.

J. Completed Work: Clean and provide maintenance on completed construction as frequently as necessary through the remainder of the construction period. Adjust and lubricate operable components to ensure operability without damaging effects.

K. Limiting Exposures: Supervise construction operations to assure that no part of the construction completed or in progress is subject to harmful, dangerous, damaging, or otherwise deleterious exposure during the construction period.

3.7 COMPLETION CLEANING

A. Clean the work areas for substantial completion and then again for final completion as noted below. Allow cleaning workers into booths only at the times explicitly permitted by PNNL or CBP.

B. Employ experienced workers or professional cleaners for cleaning. Clean each surface or unit to condition expected in an average commercial building cleaning and maintenance program. Comply with manufacturer's written instructions.

1. Complete the following cleaning operations before requesting verification of substantial completion for the entire project or for a portion of project:

a. Clean project site, yard, and grounds in areas disturbed by construction activities, including landscape development areas, of rubbish, waste material, litter, and other foreign substances.

1) Sweep paved and other hard-surfaced exterior areas broom clean. Remove petrochemical spills, stains, and other foreign deposits.

2) Rake grounds that are neither planted nor paved to a smooth, even-textured surface.

3) Remove tools, construction equipment, machinery, and surplus material from project site.

b. Remove debris and surface dust from limited access spaces, including roofs, plenums, shafts, trenches, equipment vaults, manholes, attics, and similar spaces. Sweep concrete floors broom clean in unoccupied spaces.

c. Clean exposed exterior and interior surfaces and finishes to a dirt-free condition, free of stains, films, and similar foreign substances. Avoid disturbing natural weathering of exterior surfaces. Restore reflective surfaces to their original condition.

1) Remove protective materials from floors such as cardboard. Clean hard surface interior floors with commercial floor cleaning liquid.

2) Clean transparent materials, including mirrors and glass in doors and windows. Remove glazing compounds and other noticeable, vision-obscuring materials.

3) Wipe surfaces of mechanical, electrical, and similar equipment and enclosures. Remove excess lubrication, paint and mortar droppings, and other foreign substances.

3.8 STARTING AND ADJUSTING

A. Start equipment and operating components to confirm proper operation. Repair or remove malfunctioning units, replace with new units, and retest.

B. Adjust operating components for proper operation without binding. Adjust equipment for proper operation.

C. Test each piece of equipment to verify proper operation. Test and adjust controls and safeties. Repair or replace damaged and malfunctioning controls and equipment.

D. Manufacturer's Field Service: Use only factory-authorized service representative if work is required to inspect field-assembled components and equipment installation.

3.9 PROTECTION OF INSTALLED CONSTRUCTION

A. Provide final protection and maintain conditions that ensure installed work is without damage or deterioration at time of substantial completion.

B. Comply with manufacturer's written instructions for temperature and relative humidity.

3.10 CORRECTION OF THE WORK

A. Repair or remove and replace defective construction. Restore damaged substrates and finishes.

1. Repairing includes replacing defective parts, refinishing damaged surfaces, touching up with matching materials, and properly adjusting operating equipment.

B. Restore permanent facilities used during construction to their specified condition.

C. Remove and replace damaged surfaces that are exposed to view if surfaces cannot be repaired without visible evidence of repair.

D. Repair components that do not operate properly. Remove and replace operating components that cannot be repaired.

E. Remove and replace chipped, scratched, and broken glass or reflective surfaces.

F. Comply with the quality assurance requirements for deficiency reporting and correction, including those in Section 01400 1.1.

3.11 BOOTH INSTALLATION (NOT USED)

3.12 RPM INSTALLATION

A. Install the RPM and associated components per the SAIC *RPM8 Radiation Portal Monitor Installation Manual* (Rev 1.1, March 08, 2007). Section 1.5.2 of the manual provides the installation sequence and reference to the appropriate sections of the manual necessary to complete the RPM installation. The installation steps can be summarized as follows.

B. Install equipment:

2. Install or re-install cabling and terminate cables. Verify all terminations, connectivity and communication with PNNL.

3.13 RPM AND RPM-RELATED EQUIPMENT REMOVAL AND SHIPPING (NOT USED)

3.14 BOOTH AND BATHROOM REMOVAL (NOT USED)

END OF SECTION 01700

APPENDIX A

Straddle Carrier Portal (SCP) Installation Summary

The following summary assumes the site preparation work has been completed and intermodal container (IMC) anchoring installed.

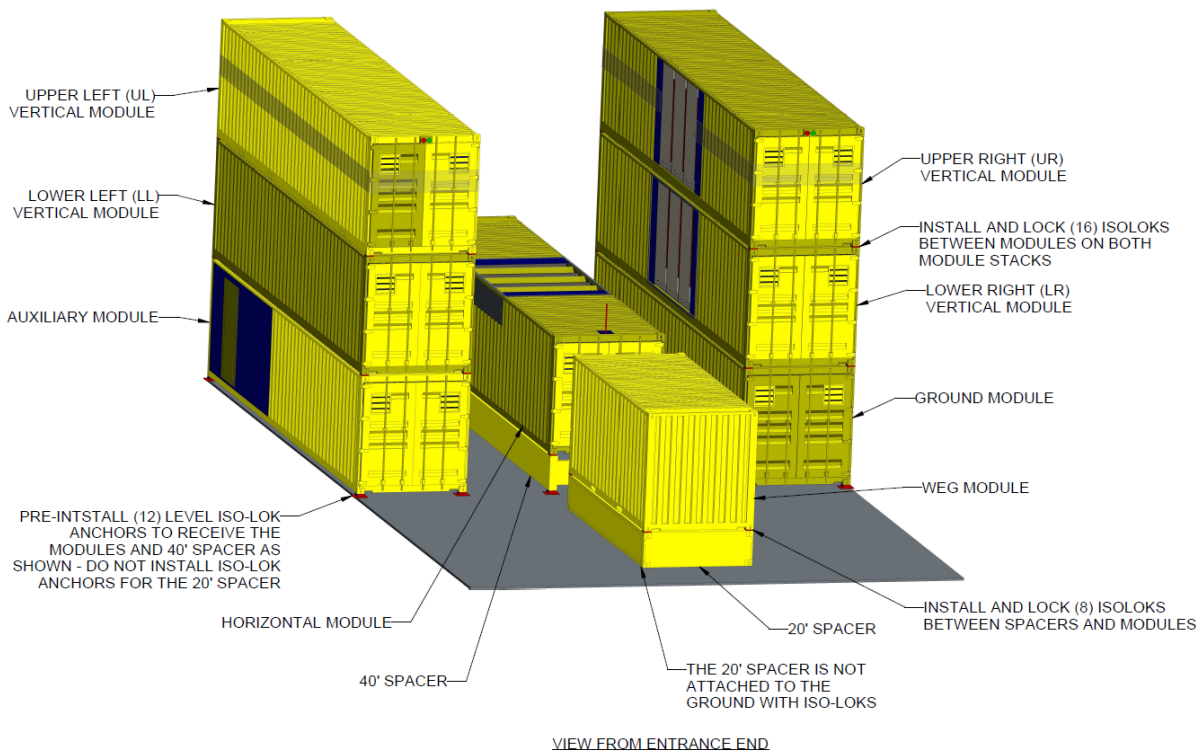

Figure 1. SCP RPM Installation Diagram

Figure 2. Existing SCP RPM systems installed at Savannah River Nation Laboratory (SRNL). Note: 20' WEG Module has not been placed.

Summary of SCP RPM installation process

1. Unload IMC spacers and stairs from trucks (seven 40' IMCs, one 20'IMC, one 40' spacer, one 20' spacer, one staircase per system)
2. Remove all shipping cover panels and store in respective IMC.
    - AUX-0
    - LL- 3 (over detectors)
    - UL-3 (over detectors), 3 (camera/light recesses)
    - HORZ-3 (over detectors)
    - GRND-0
    - LR-3 (over detectors)
    - UR-3 (over detectors)

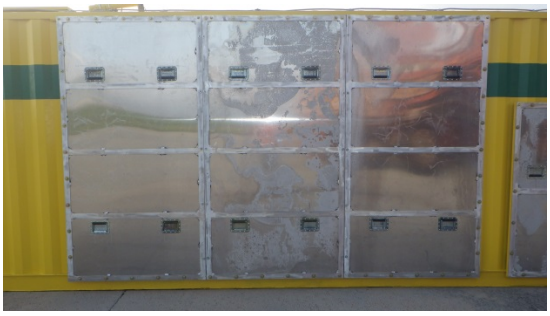

Figures 1 and 2. Detector Shipping Covers On and Respective Storage Location inside IMC.

Figure 3. Shipping Covers for Ancillary Equipment

3. Remove all cable pass-through shipping covers and store in respective IMC.
    - AUX-1 (outside top)

- LL- 1 (outside top), 1 (floor inside)
- UL-1 (floor inside)
- HORZ-0
- GRND-1 (outside top)
- LR-1 (outside top), 1 (floor inside)
- UR-1 (floor inside)

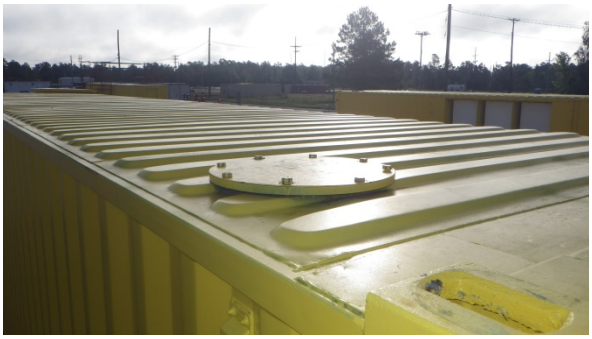

Figures 4 and 5. Cable Pass Through Covers (on top of IMCC and inside floor)

4. Remove all personnel hatch covers and store in respective IMCC. (All on top of IMCC)
    - AUX-1
    - LL-1
    - GRND-1
    - LR-1

Figures 6 and 7. Personnel Hatch Cover Installed and Removed (on top of IMC)

5. Stack containers according to system design.
6. Using aerial lift, screw on lightning protection rods along the top of the UL and UR IMC's.

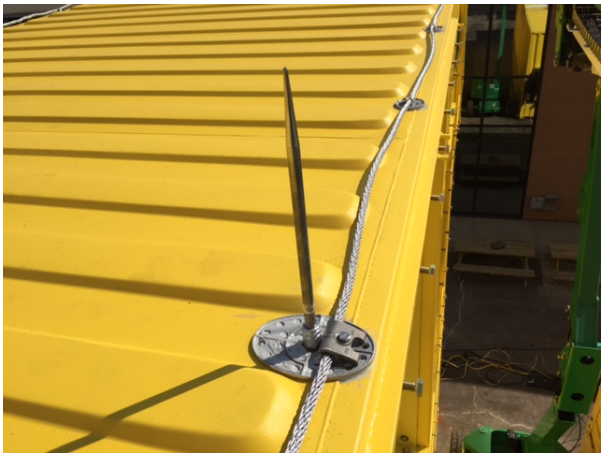

Figure 5. Lightning Protect Rod

7. Install bonding straps down the corners of the left and right IMC stacks. (2 places for each stack)

Figure 6. Install Bonding Strap.

8. Ground left and right stacks to installed site ground.
9. Install personnel ladder hatch pass-through sleeves. (Line up markings)

Figure 7. Hatch Sleeve (not installed)

- 1 each for LL, UL, LR and UR

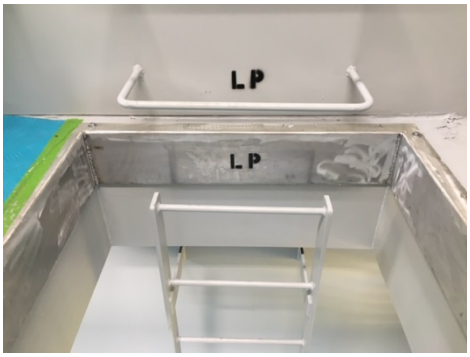

Figures 8 and 9. Personnel Ladder Hatch Sleeve (top and bottom views).

10. Install all cable pass-through sleeves
    - 1 each for LL, UL, LR and UR

Figure10: Cable pass-through sleeve.

11. Drop down electrical flex conduit from higher IMCC to its respective lower IMC.

- UL down to LL
- LL down to AUX
- UR down to LR
- LR down to GRND

Figure 11. Flex Conduit dropped through Sleeve

12. Connect flex conduit to proper junction box according to drawings (LL, AUX, LR, GRND
13. Install and wire over height-sensors on both the UL and UR IMCC's using the personnel hatch.

Figure 12. Over-height sensor

14. Install stairs for HORZ IMC. Stairs mount to the spacer under the HORZ.
15. Punch holes in external junction boxes (6 boxes total) for the duct bank stub up.

Figure 13. External Junction Boxes (2 of 6)

Figure 14. Underside of External Junction Boxes (for punch out locations)

16. Connect the wiring from the duct bank stub up for the stack to stack connections per the drawings.
17. Confirm all wiring
18. Power system
19. Align VPS' and over-height sensors

Existing CBP Booth installed at PCT

CONSTRUCTION SPECIFICATIONS

Prepared for:

Port of Tacoma Straddle Carrier
Leidos PVT Initial Deployment

April 2016

Prepared by:

12 W. Kennewick Ave.
Kennewick, Washington 99336
(509) 735-1589
(509) 783-5075 Fax

Project No. 15-7833

TABLE OF CONTENTS

Division 03 – Concrete
03 3000 Cast-in-Place Concrete

Division 05 – Metals
05 5000 Metal Fabrications

Division 26 – Electrical
26 0500 Common Work Results for Electrical
26 0519 Low-Voltage Electrical Power Conductors and Cables
26 0526 Grounding and Bonding for Electrical Systems
26 0529 Hangers and Supports for Electrical Systems
26 0533 Raceway and Boxes for Electrical Systems
26 0543 Underground Ducts and Raceways for Electrical Systems
26 0553 Identification for Electrical Systems
26 0923 Lighting Control Devices
26 2200 Low-Voltage Transformers
26 2416 Panelboards
26 2726 Wiring Devices
26 2813 Fuses
26 4113 Lightning Protection
26 5600 Exterior Lighting

Division 27 – Communications
27 0500 Common Work Results For Communications
27 1300 Communications Backbone Cabling
27 1500 Communications Horizontal Cabling

Division 31 – Earthwork
31 0501 Common Earthwork Requirements
31 1000 Site Clearing
31 2213 Rough Grading
31 2316 Excavation
31 2319 Dewatering
31 2323 Fill

Division 32 – Exterior Improvements
32 1216 Asphalt Paving

SECTION 03 3000 - CAST-IN-PLACE CONCRETE

PART 1 - GENERAL

1.1 SUMMARY

A. Includes But Not Limited To:
   1. Furnish and install Project concrete work as described in Contract Documents.
   2. Quality of concrete used on Project but furnished under other Sections.

B. Products Installed But Not Supplied Under This Section:
   1. Inserts, bolts, boxes, templates, and fastening devices for other work, including those for bases only for Mechanical and Electrical.
   2. Concrete accessories.

C. Related Sections:
   1. Divisions 26 and 27: Mechanical and electrical devices including boxes, conduits, pipes, hangers, inserts, and other work to be embedded in concrete work before placing.
   2. Section 31 2323: Granular base course under slabs.
   3. Furnishing of items to be embedded in concrete specified in Section involved.

1.2 REFERENCES

A. American Society For Testing And Materials:

   1. ASTM C 33-03, “Standard Specification for Concrete Aggregates”.
   2. ASTM C 94-06, “Standard Specification for Ready-Mixed Concrete”.
   3. ASTM C 150-06, “Standard Specification for Portland Cement”.
   4. ASTM C 260-01, “Standard Specification for Air-Entraining Admixtures for Concrete”.
   5. ASTM C 494-04, “Standard Specification for Chemical Admixtures for Concrete”.
   6. ASTM C 618-03, “Standard Specification for Coal Fly Ash and Raw or Calcined Natural Pozzolan for Use in Concrete”.
   7. ASTM E 1155-96 (2001), “Standard Test Method for Determining F_F Floor Flatness and F_L Floor Levelness Numbers”.
   8. ASTM C31 / C31M-03, “Practice for Making and Curing Concrete Test Specimens in the Field”.
   9. ASTM C39 / C39M-01, “Test Method for compressive Strength of Cylindrical Concrete Specimens”.
   10. ASTM C42 / C42M-99, “Test Method for Obtaining and Testing Drilled Cores and Sawed Beams of Concrete”.

11. ASTM C143 / C143M-00, “Test Method for Slump of Hydraulic-Cement Concrete”.
12. ASTM C231-97**, “Test Method for Air Content of Freshly Mixed Concrete by the Pressure Method”.
13. ASTM C1064 / C1064M-01, “Test Method for Temperature of Freshly Mixed Portland Cement Concrete”.

1.3 SYSTEM DESCRIPTION

A. Performance Requirements:
   1. Conform to requirements of ASTM C 94 unless specified otherwise.
   2. For testing purposes, following concrete strengths are required:
      a. At 7 days: 70 percent minimum of 28 day strengths (2.2A1a).
      b. Prior to RPM placement, 3000 psi. minimum.
      c. At 28 days: 28 day strength (2.2A1a).

1.4 SUBMITTALS

A. Shop Drawings: For steel reinforcement.

B. Quality Assurance / Control:
   1. Concrete mix design.
   2. Delivery Tickets: Require mix plant to furnish delivery ticket for each batch of concrete. Keep delivery tickets at job-site for use of PNNL or its representatives. Tickets shall show following:
      a. Name of ready-mix batch plant.
      b. Serial number of ticket.
      c. Date and truck number.
      d. Name of Contractor.
      e. Name and location of Project.
      f. Specific class or designation of concrete conforming to that used in Contract Documents.
      g. Amount of concrete.
      h. Time loaded.
      i. Type, name, manufacturer, and amount of admixtures used.
      j. Amount and type of cement.
      k. Total water content.
      l. Sizes and weights of sand and aggregate.

C. Qualification Data: For testing agency

D. Field quality-control test and inspection reports.

1.5 QUALITY ASSURANCE

A. Manufacturer Qualifications: A firm experienced in manufacturing ready-mixed concrete products and that complies with ASTM C 94/C 94M requirements for production facilities and equipment.
   1. Manufacturer certified according to National Ready Mixed Concrete Association (NRMCA) “Certification of Ready Mixed Concrete Production Facilities”.

B. Testing Agency Qualifications: An independent agency, acceptable to authorities having jurisdiction, qualified according to ASTM C 1077 and ASTM E 329 for testing indicated, as documented according to ASTM E 548.

C. ACI Publications: Comply with the following unless modified by requirements in the Contract Documents:
   1. ACI 301, “Specification for Structural Concrete”, Sections 1 through 5.
   2. ACI 117, “Specifications for Tolerances for Concrete Construction and Materials”.

1.6 PROJECT CONDITIONS

A. Project Environmental Requirements:
   1. Cold Weather Concreting Procedures:
      a. General Requirements:
         1) Materials and equipment required for heating and protection of concrete shall be approved and available at Project site before beginning cold weather concreting.
         2) Forms, reinforcement, metallic embedments, and fillers shall be free from snow, ice, and frost. Surfaces that will be in contact with newly placed concrete, including sub-grade materials, shall be 35 deg F minimum at time of concrete placement.
         3) Thaw sub-grade 6 inches deep minimum before beginning concrete placement. If necessary, re-compact thawed material.
         4) Use no frozen materials or materials containing ice.
      b. Requirements when average 24 hour temperature, midnight to midnight, is below 40 deg F.
         1) Temperature of concrete as placed and maintained shall be 55 deg F minimum and 90 deg F maximum.
         2) Heat concrete for 72 hours minimum after placing if regular cement is used; for 48 hours if high early strength cement is used; or longer if determined necessary by PNNL. During this period, maintain concrete surface temperature between 55 and 90 deg F.
         3) Vent flue gases from combustion heating units to outside of enclosure to prevent carbonation of the concrete surface.
         4) Prevent concrete from drying during heating period. Maintain housing, insulation, covering, and other protection 24 hours after heat is discontinued.

5) After heating period, if temperature falls below 32 deg F, protect concrete from freezing until strength of 2,000 psi minimum is achieved. Protect flatwork exposed to melting snow or rain during day and freezing during night from freezing until strength of 3,500 psi minimum is achieved.

c. Requirements when average 24 hour temperature, midnight to midnight, is above 40 deg F, but when temperature falls below 32 deg F:

1) Protect concrete from freezing for 72 hours after placing, or until 2,000 psi compressive strength is achieved, whichever is longer. Protect flatwork exposed to melting snow or rain during day and freezing during night from freezing until strength of 3,500 psi minimum is achieved.

d. Protect soil supporting concrete footings from freezing under any circumstances.

2. Hot Weather Concreting Procedures:

a. Maximum concrete temperature allowed is 90 deg F in hot weather.

b. Cool aggregate and sub-grades by sprinkling.

c. Avoid cement temperatures over 140 deg F.

d. Use cold mixing water or ice.

e. Use fog spray or evaporation retardant to lessen rapid evaporation from concrete surface.

PART 2 - PRODUCTS

2.1 MATERIALS

A. Portland Cement: Meet requirements of ASTM C 150, Type IIA or IIIA.

B. Aggregates:

1. Coarse:

a. Meet requirements of ASTM C 33 or nonconforming aggregate that by test or actual service produces concrete of required strength and conforms to local governing codes.

b. Aggregate shall be uniformly graded by weight as follows:

1) Flat Work, Size No. 67.

Sieve	Percent Passing
One Inch	100
3/4 Inch	90 - 100
3/8 Inch	20 - 55
No. 4	0 - 10
No. 8	0 - 5

2) All Other, Size No. 57.

Sieve	Percent Passing

1-1/2 Inch	100
One Inch	95 - 100
1/2 Inch	25 - 60
No. 4	0 - 10
No. 8	0 - 5

2. Fine:
   a. Meet requirements of ASTM C 33.
   b. Aggregate shall be uniformly graded by weight as follows:

Sieve	Percent Passing
3/8 Inch	100
No. 4	95 - 100
No. 8	80 - 100
No. 16	50 - 85
No. 30	25 - 60
No. 50	10 - 30
No. 100	2 - 10

C. Water: Clear, apparently clean, and potable.

D. Admixtures And Miscellaneous:
   1. Mineral:
      a. Fly Ash Pozzolan: Meet requirements of ASTM C 618, Class F and with loss on ignition (LOI) of 3 percent maximum.

   2. Chemical:
      a. No admixture shall contain calcium chloride nor shall calcium chloride be used as an admixture. All chemical admixtures used shall be from same manufacturer and compatible with each other.
      b. Air Entraining Admixture: Meet requirements of ASTM C 260.
      c. Water Reducing Admixture: Meet requirements of ASTM C 494, Type A and containing not more than 0.05 percent chloride ions.
      d. High Range Water Reducing Admixture (Superplasticizer): Meet requirements of ASTM C 494, Type F, containing not more than 0.05 percent chloride ions.
      e. Evaporation Retardant.
      f. Bonding Agents.

2.2 MIXES

A. Submit mix design to meet following requirements:
   1. Proportions:

a. Mix Design: Minimum Compressive Strength: 4,500 psi at 28 days or as specified on project drawings.
b. Air Entrainment:
   1) Exterior Concrete: 6-8 percent.
c. Do not add water any time during mixing cycle above amount required to meet specified water / cement ratio. No reduction in the amount of cementitious material is allowed.

2. Admixtures:
   a. Mix design shall show proposed admixture, amount, usage instructions, and justification for proposed use. Do not use any admixture without PNNL's written approval.
   b. Mineral: An amount of specified fly ash not to exceed 20 percent of weight of cement may be substituted for cement. If substituted, consider fly ash with cement in determining amount of water necessary to provide specified water / cement ratio.
   c. Chemical:
      1) 4 inch slump maximum before addition of high range water reducer.
      2) 7 inch slump maximum with use of high range water reducer with approval of Engineer of Record or PNNL Design Authority.
      3) Specified accelerator or retarder may be used if necessary to meet environmental conditions.

PART 3 - EXECUTION

3.1 PREPARATION

A. Inserts, bolts, boxes, templates, pipes, conduits, and other accessories required by Divisions 26, and 27 shall be installed and verified before placing concrete.

B. Install inserts, bolts, boxes, templates, pipes, conduits, and other accessories furnished under other Sections to be installed as part of work of this Section. Tie anchor bolts for hold-down anchors and columns securely to reinforcing steel.

C. Remove water and debris from space to be placed.

3.2 INSTALLATION

A. Site Tolerances:
   1. Tolerances shall conform to requirements of ACI 117, except where otherwise specified on project drawings or details.
   2. Local Flatness / Levelness of Interior Slabs:
      a. Specified Overall Value of F_F28 / F_L20 and Minimum Local Value of F_F20 / F_L15 when tested in accordance with ASTM E 1155.
      b. Table Four: Maximum Variation Tolerances.

Thickness, standard	plus 3/8 inch, minus 1/4 inch
Thickness, footings	minus 0 inch
Plan, 0 - 20 feet	1/2 inch
Plan, 40 feet or greater	3/4 inch
Plan, footings	plus 1/2 inch
Eccentricity, footings	2 inch max standard, 1/2 inch at masonry
Openings, size	minus 1/4 inch, plus One inch
Openings, location	plus / minus 1/2 inch at center
Plumb	1/2 inch max

B. Placing:
1. Place as soon after mixing as possible. Deposit as nearly as possible in final position. Placing of concrete shall be continuous until a panel or section is complete.
2. If concrete is pumped, take test cylinder concrete from the discharge end of pump lines.
3. Concrete shall not come into contact with aluminum products during pumping or placing.
4. Consolidate concrete in forms by vibrating and other means where required. Thoroughly work in concrete around reinforcing bars.
5. Do not embed aluminum in concrete.
6. Do not use contaminated, deteriorated, or re-tempered concrete.
7. Avoid accumulation of hardened concrete.

C. Bonding Fresh And Hardened Concrete:
1. Re-tighten forms.
2. Roughen surfaces.
3. Clean off foreign matter and laitance.
4. Wet but do not saturate.
5. Slush with neat cement grout or apply bonding agent.
6. Proceed with placing new concrete.

D. Special Requirements:
1. Exterior Slabs:
   a. Dusting with cement not permitted.
   b. For continuous placing and where shown on Drawings, saw cut one inch deep control joints before shrinkage occurs.
2. Anchor Bolts:
   a. Anchor bolts shall not be wet-set. Do not disturb bolts during finishing process.
   b. Adhesive anchor bolts or expansion anchors are permitted where specified on project drawings and details.

E. Finishing:
   1. Rubbed Finish, Exposed Vertical Surfaces:
      a. Immediately after removing forms, remove joints, marks, bellies, projections, loose materials, and cut back metal ties from surfaces to be exposed.
      b. Point up voids with cement mortar, 1:2 mix, and rub exposed surface with carborundum to smooth, even surface.
   2. Broom Finishes, Exterior Flatwork:
      a. Broom finish exterior slabs.
      b. Round edges including edges formed by expansion joints.
      c. Remove edger marks.

3.3 FIELD QUALITY CONTROL

A. Testing and Inspecting: Contractor will engage a special inspector and qualified testing and inspecting agency to perform field tests and inspections and prepare test reports.

B. Concrete Tests: Testing of composite samples of fresh concrete obtained according to ASTM C 172 shall be performed according to the following requirements:
   1. Testing Frequency: Obtain one composite sample for each day's pour of each concrete mixture less than 25 cu. yd., plus one set for each additional 50 cu. yd. or fraction thereof. A composite sample consists of tests for slump, air content, and concrete temperature and taking standing cylinder specimens. Obtain a minimum of one composite sample for each isolated foundation. (See also drawings).
   2. Slump: ASTM C 143/C 143M; one test at point of placement for each composite sample. Perform additional tests when concrete consistency appears to change.
   3. Air Content: ASTM C 231, pressure method, for normal-weight concrete; one test for each composite sample.
   4. Concrete Temperature: ASTM C 1064/C 1064M; one test hourly when air temperature is 40 deg F and below and when 80 deg F and above.
   5. Compression Test Specimens: ASTM C 31/C 31M.
      a. Cast and laboratory cure at least 3 sets of 2 standard cylinder specimens for each composite sample.
      b. Additional sets of cylinders may be cast and cured at contractor’s option and expense if contractor desires early compressive-strength tests and receives written approval.
   6. Compressive-Strength Tests: ASTM C 39/C 39M; test one set of two laboratory-cured specimens at 7 days and one set of two specimens at 28 days. One set of two laboratory-cured specimens will be held in reserve.
      a. A compressive-strength test shall be the average compressive strength from a set of two specimens obtained from same composite sample and tested at age indicated.
      b. Prior to loading concrete with any load, the concrete shall have achieved 3000 psi and have at least a 7 day age. If 7 day laboratory cured specimens do not exceed 3,000 psi, one set of two laboratory-cured reserve specimens may be tested at a time agreed to by PNNL and Contractor.

7. Strength of each concrete mixture will be satisfactory if every average of any three consecutive compressive-strength tests equals or exceeds specified compressive strength and no compressive-strength test value falls below specified compressive strength by more than 500 psi.
8. Test results shall be reported in writing to PNNL, concrete manufacturer, and Contractor within 48 hours of testing. Reports of compressive-strength tests shall contain Project identification name and number, date of concrete placement, name of concrete testing and inspecting agency, location of concrete batch in Work, design compressive strength at 28 days, concrete mixture proportions and materials, compressive breaking strength, and type of break for both 7 and 28-day tests.
9. Nondestructive Testing: Impact hammer, sonoscope, or other nondestructive device may be permitted by PNNL but will not be used as sole basis for approval or rejection of concrete.
10. Concrete inspection and testing shall be waived for booth pads, relocatable RPM service pads, equipment rack pads and bollard footings when contractor uses 4500psi concrete throughout work.
11. Concrete inspection and testing shall be waived for traffic signs shown in the drawings to be constructed with SAKCRETE footings.
12. Correct deficiencies in the Work that test reports and inspections indicate does not comply with the Contract Documents.

3.4 PROTECTION

A. Protect concrete that has not received its initial set from precipitation to avoid excess water in mix and unsatisfactory surface finish.

B. Do not allow materials resulting from construction activities, which will affect concrete or application of finish floor systems adversely, to come in contact with interior concrete slabs.

END OF SECTION 03 3000

SECTION 05 5000 - METAL FABRICATIONS

PART 1 - GENERAL

1.1 SUMMARY

A. This Section includes the following:
   1. Metal bollards.
   2. Sign posts.
   3. RPM Bases.
   4. Stairs.
   5. Miscellaneous steel.

B. Products furnished, but not installed, under this Section include the following:
   1. Anchor bolts.

C. Related Sections include the following:
   1. Division 03 Section “Cast-in-Place Concrete” for installing anchor bolts, steel pipe sleeves, wedge-type inserts and other items indicated to be cast into concrete.

1.2 QUALITY ASSURANCE

A. Welding: Qualify procedures and personnel according to the following:
   1. AWS D1.1, “Structural Welding Code-Steel”.

1.3 SUBMITTALS

A. Shop drawings for stairs.

B. Mill Certificates: Signed by manufacturers of stainless-steel sheet certifying that products furnished comply with requirements.

C. Welding certificates. (The only submittal required for minor welding is the welding certificate).

D. WPS.

E. Certification of weld examination personnel.

F. Report of weld inspections.

1.4 PROJECT CONDITIONS

A. Field Measurements: Verify actual locations of walls and other construction contiguous with metal fabrications by field measurements before fabrication.

1. Established Dimensions: Where field measurements cannot be made without delaying the Work, establish dimensions and proceed with fabricating metal fabrications without field measurements. Coordinate wall and other contiguous construction to ensure that actual dimensions correspond to established dimensions.
2. Provide allowance for trimming and fitting at site.

1.5 COORDINATION

A. Coordinate installation of anchorages for metal fabrications. Furnish setting drawings, templates, and directions for installing anchorages, including sleeves, concrete inserts, anchor bolts, and items with integral anchors, that are to be embedded in concrete or masonry. Deliver such items to Project site in time for installation.

B. Coordinate installation of steel weld plates and angles for casting into concrete that are specified in this Section but required for work of another Section. Deliver such items to Project site in time for installation.

PART 2 - PRODUCTS

2.1 METALS, GENERAL

A. Metal Surfaces, General: Provide materials with smooth, flat surfaces, unless otherwise indicated. For metal fabrications exposed to view in the completed Work, provide materials without seam marks, roller marks, rolled trade names, or blemishes.

2.2 FERROUS METALS

A. Steel Plates, Shapes, and Bars: ASTM A 36/A 36M.

B. Steel Pipe: ASTM A 53/A 53M, standard weight (Schedule 40), unless another weight is indicated or required by structural loads.

2.3 FASTENERS

A. Steel Bolts and Nuts: Regular hexagon-head bolts, ASTM A307, Grade A; with hex nuts, ASTM A 563; and, where indicated, flat washers.

B. Provide hot-dip or mechanically deposited, zinc-coated anchor bolts where item being fastened is indicated to be galvanized.

C. RPM Anchor Bolts: ASTM F 1554, Grade 55 (galvanized).

D. Booth Anchor Bolts shall be HILTI-TZ rods installed per the manufacturer instructions with HILTI- HY-200 adhesive.

E. Expansion Anchors: Anchor bolt and sleeve assembly with capability to sustain, without failure, a load equal to six times the load imposed when installed in unit masonry and four times the load imposed when installed in concrete, as determined by testing according to ASTM E 488, conducted by a qualified independent testing agency.

2.4 MISCELLANEOUS MATERIALS

A. Welding Rods and Bare Electrodes: Select according to AWS specifications for metal alloy welded.

B. Nonshrink, Nonmetallic Grout: Factory-packaged, nonstaining, noncorrosive, nongaseous grout complying with ASTM C 1107. Provide grout specifically recommended by manufacturer for interior and exterior applications.

2.5 FABRICATION, GENERAL

A. Shop Assembly: Preassemble items in the shop to greatest extent possible. Disassemble units only as necessary for shipping and handling limitations. Use connections that maintain structural value of joined pieces. Clearly mark units for reassembly and coordinated installation.

B. Cut, drill, and punch metals cleanly and accurately. Remove burrs and ease edges to a radius of approximately 1/32 inch, unless otherwise indicated. Remove sharp or rough areas on exposed surfaces.

C. Form bent-metal corners to smallest radius possible without causing grain separation or otherwise impairing work.

D. Form exposed work true to line and level with accurate angles and surfaces and straight edges.

E. Weld corners and seams continuously to comply with the following:
   1. Use materials and methods that minimize distortion and develop strength and corrosion resistance of base metals.
   2. Obtain fusion without undercut or overlap.
   3. Remove welding flux immediately.
   4. At exposed connections, finish exposed welds and surfaces smooth and blended so no roughness shows after finishing and contour of welded surface matches that of adjacent surface.

F. Form exposed connections with hairline joints, flush and smooth, using concealed fasteners where possible. Where exposed fasteners are required, use Phillips flat-head

(countersunk) screws or bolts, unless otherwise indicated. Locate joints where least conspicuous.

G. Fabricate seams and other connections that will be exposed to weather in a manner to exclude water. Provide weep holes where water may accumulate.

H. Cut, reinforce, drill, and tap metal fabrications as indicated to receive finish hardware, screws, and similar items.

I. Provide for anchorage of type indicated; coordinate with supporting structure. Space anchoring devices to secure metal fabrications rigidly in place and to support indicated loads.
   1. Where units are indicated to be cast into concrete or built into masonry, equip with integrally welded steel strap anchors, 1/8 by 1 and 1/2 inches, with a minimum 6 inch embedment and 2 inch hook, not less than 8 inches from ends and corners of units and 24 inches o.c., unless otherwise indicated.

2.6 MISCELLANEOUS FRAMING AND SUPPORTS

A. General: Provide steel framing and supports not specified in other Sections as needed to complete the Work.

B. Fabricate units from steel shapes, plates, and bars of welded construction, unless otherwise indicated. Fabricate to sizes, shapes, and profiles indicated and as necessary to receive adjacent construction retained by framing and supports. Cut, drill, and tap units to receive hardware, hangers, and similar items.
   1. Fabricate units from slotted channel framing where indicated.
   2. Furnish inserts if units are installed after concrete is placed.

C. Galvanize miscellaneous framing and supports where indicated.

D. Prime miscellaneous framing and supports with zinc-rich primer where indicated.

2.7 STEEL WELD PLATES AND ANGLES

A. Provide steel weld plates and angles not specified in other Sections, for items supported from concrete construction as needed to complete the Work. Provide each unit with not less than two integrally welded steel strap anchors for embedding in concrete.

2.8 METAL BOLLARDS

A. Fabricate metal bollards from Schedule 40 steel pipe.

PART 3 - EXECUTION

3.1 INSTALLATION, GENERAL

A. Cutting, Fitting, and Placement: Perform cutting, drilling, and fitting required for installing metal fabrications. Set metal fabrications accurately in location, alignment, and elevation; with edges and surfaces level, plumb, true, and free of rack; and measured from established lines and levels.

B. Fit exposed connections accurately together to form hairline joints. Weld connections that are not to be left as exposed joints but cannot be shop welded because of shipping size limitations. Do not weld, cut, or abrade surfaces of exterior units that have been hot-dip galvanized after fabrication and are for bolted or screwed field connections.

C. Field Welding: Comply with the following requirements:
   1. Use materials and methods that minimize distortion and develop strength and corrosion resistance of base metals.
   2. Obtain fusion without undercut or overlap.
   3. Remove welding flux immediately.
   4. At exposed connections, finish exposed welds and surfaces smooth and blended so no roughness shows after finishing and contour of welded surface matches that of adjacent surface.

D. Fastening to In-Place Construction: Provide anchorage devices and fasteners where metal fabrications are required to be fastened to in-place construction. Provide threaded fasteners for use with concrete and masonry inserts, toggle bolts, through bolts, lag bolts, wood screws, and other connectors.

E. Provide temporary bracing or anchors in formwork for items that are to be built into concrete, masonry, or similar construction.

3.2 QUALITY CONTROL

A. Testing Agency: Contractor will engage a qualified independent testing and inspecting agency to inspect structural welds.

B. Minor welding (e.g., signage, relocatable base plates and intercoms) shall not require independent inspections. Minor welding shall be performed by an AWS certified welder. Surfaces to be welded shall be free of galvanized coatings and paint. Finished welds shall be free of slag and wire brushed before application of primer/paint or other coatings.

C. Welded Connections: Welds will be visually inspected according to AWS D1.1.

D. Correct deficiencies in Work that test reports and inspections indicate does not comply with the Contract Documents.

END OF SECTION 05 5000

SECTION 26 0500 - COMMON WORK RESULTS FOR ELECTRICAL

PART 1 - GENERAL

1.1 SUMMARY

A. Section Includes:
   1. Sleeves for raceways and cables.
   2. Sleeve seals.
   3. Grout.
   4. Common electrical installation requirements.

PART 2 - PRODUCTS

2.1 SLEEVES FOR RACEWAYS AND CABLES

A. Steel Pipe Sleeves: ASTM A53/A53M, Type E, Grade B, Schedule 40, galvanized steel, plain ends, painted or dipped.

B. Sleeves for Rectangular Openings: Galvanized sheet steel.
   1. Minimum Metal Thickness:
      a. For sleeve cross-section rectangle perimeter less than 50 inches and no side more than 16 inches, thickness shall be 0.052 inch.
      b. For sleeve cross-section rectangle perimeter equal to, or more than, 50 inches and 1 or more sides equal to, or more than, 16 inches, thickness shall be 0.138 inch.

2.2 GROUT

A. Nonmetallic, Shrinkage-Resistant Grout: ASTM C 1107, factory-packaged, nonmetallic aggregate grout, noncorrosive, nonstaining, mixed with water to consistency suitable for application and a 30-minute working time.

PART 3 - EXECUTION

3.1 COMMON REQUIREMENTS FOR ELECTRICAL INSTALLATION

A. Comply with NECA 1.

B. Measure indicated mounting heights to bottom of unit for suspended items and to center of unit for wall-mounting items.

C. Headroom Maintenance: If mounting heights or other location criteria are not indicated, arrange and install components and equipment to provide maximum possible headroom consistent with these requirements.

D. Equipment: Install to facilitate service, maintenance, and repair or replacement of components of both electrical equipment and other nearby installations. Connect in such a way as to facilitate future disconnecting with minimum interference with other items in the vicinity.

E. Right of Way: Give to piping systems installed at a required slope.

3.2 SLEEVE INSTALLATION FOR ELECTRICAL PENETRATIONS

A. Use pipe sleeves for penetrations of fire-rated floor and wall assemblies unless penetration arrangement requires rectangular sleeved opening.

B. Fire-Rated Assemblies: Install sleeves for penetrations of fire-rated floor and wall assemblies unless openings compatible with firestop system used are fabricated during construction of floor or wall.

C. Cut sleeves to length for mounting flush with both surfaces of walls.

D. Extend sleeves installed in floors 2 inches above finished floor level.

E. Size pipe sleeves to provide 1/4 inch annular clear space between sleeve and raceway or cable, unless indicated otherwise.

F. Seal space outside of sleeves with grout for penetrations of concrete and masonry.
   1. Promptly pack grout solidly between sleeve and wall so no voids remain. Tool exposed surfaces smooth; protect grout while curing.

G. Fire-Rated-Assembly Penetrations: Maintain indicated fire rating of walls, partitions, ceilings, and floors at raceway and cable penetrations. Install sleeves and seal raceway and cable penetration sleeves with firestop materials.

3.3 SLEEVE-SEAL INSTALLATION

A. Install to seal Fire-Rated exterior wall penetrations.

B. Use type and number of sealing elements recommended by manufacturer for raceway or cable material and size. Position raceway or cable in center of sleeve. Assemble mechanical sleeve seals and install in annular space between raceway or cable and sleeve. Tighten bolts against pressure plates that cause sealing elements to expand and make watertight seal.

3.4 FIRESTOPPING

A. Apply firestopping to penetrations of fire-rated floor and wall assemblies for electrical installations to restore original fire-resistance rating of assembly.

END OF SECTION 26 0500

SECTION 26 0519 - LOW-VOLTAGE ELECTRICAL POWER CONDUCTORS AND CABLES

PART 1 - GENERAL

1.1 SUMMARY

A. This Section includes the following:
   1. Building wires and cables rated 600 V and less.
   2. Connectors, splices, and terminations rated 600 V and less.
   3. Sleeves and sleeve seals for cables.

1.2 QUALITY ASSURANCE

A. Electrical Components, Devices, and Accessories: Listed and labeled as defined in NFPA 70, Article 100, by a testing agency acceptable to authorities having jurisdiction, and marked for intended use.

B. Comply with NFPA 70.

PART 2 - PRODUCTS

2.1 CONDUCTORS AND CABLES

A. Copper Conductors: Comply with NEMA WC 70.

B. Conductor Insulation: Comply with NEMA WC 70 for Types THW, THHN-THWN, XHHW, UF, USE and SO.

C. Multiconductor Cable: Comply with NEMA WC 70 for armored cable, Type AC metal-clad cable, Type MC mineral-insulated, metal-sheathed cable, Type MI nonmetallic-sheathed cable, Type NM Type SO and Type USE with ground wire.

2.2 CONNECTORS AND SPLICES

A. Available Manufacturers: Subject to compliance with requirements, manufacturers offering products that may be incorporated into the Work include, but are not limited to, the following:
   1. AFC Cable Systems, Inc.
   2. Hubbell Power Systems, Inc.
   3. O-Z/Gedney; EGS Electrical Group LLC.
   4. 3M; Electrical Products Division.

5. Tyco Electronics Corp.

B. Description: Factory-fabricated connectors and splices of size, ampacity rating, material, type, and class for application and service indicated.

2.3 SLEEVES FOR CABLES

A. Steel Pipe Sleeves: ASTM A53/A53M, Type E, Grade B, Schedule 40, galvanized steel, plain ends, painted or dipped.

B. Cast-Iron Pipe Sleeves: Cast or fabricated “wall pipe”, equivalent to ductile-iron pressure pipe, with plain ends and integral waterstop, unless otherwise indicated.

2.4 SLEEVE SEALS

A. Available Manufacturers: Subject to compliance with requirements, manufacturers offering products that may be incorporated into the Work include, but are not limited to, the following:
   1. Advance Products & Systems, Inc.
   2. Calpico, Inc.
   3. Metraflex Co.
   4. Pipeline Seal and Insulator, Inc.

B. Description: Modular sealing device, designed for field assembly, to fill annular space between sleeve and cable.
   1. Sealing Elements: EPDM interlocking links shaped to fit surface of cable or conduit. Include type and number required for material and size of raceway or cable.
   2. Pressure Plates: Plastic. Include two for each sealing element.
   3. Connecting Bolts and Nuts: Carbon steel with corrosion-resistant coating of length required to secure pressure plates to sealing elements. Include one for each sealing element.

PART 3 - EXECUTION

3.1 CONDUCTOR MATERIAL APPLICATIONS

A. Feeders: Copper. Stranded.

B. Branch Circuits: Copper. Stranded.

3.2 CONDUCTOR INSULATION AND MULTICONDUCTOR CABLE APPLICATIONS AND WIRING METHODS

A. Service Entrance: Type THHN-THWN or XHHW single conductors in raceway.

B. Exposed Feeders: Type THHN-THWN or XHHW single conductors in raceway.

C. Feeders Concealed in Ceilings, Walls, Partitions, and Crawlspaces: Type THHN-THWN, single conductors in raceway.

D. Feeders Concealed in Concrete, below Slabs-on-Grade, and Underground: Type THHN-THWN, single conductors in raceway.

E. Exposed Branch Circuits, Including in Crawlspaces: Type THHN-THWN, single conductors in raceway.

F. Branch Circuits Concealed in Ceilings, Walls, and Partitions: Type THHN-THWN, single conductors in raceway.

G. Branch Circuits Concealed in Concrete, below Slabs-on-Grade, and Underground: Type THHN-THWN, single conductors in raceway.

H. Cord Drops and Portable Appliance Connections: Type SO, hard service cord with stainless-steel, wire-mesh, strain relief device at terminations to suit application.

I. Class 1 Control Circuits: Type THHN-THWN, in raceway.

J. Class 2 Control Circuits: Power-limited cable, concealed in building finishes or Power-limited tray cable, in cable tray.

3.3 INSTALLATION OF CONDUCTORS AND CABLES

A. Conceal cables in finished walls, ceilings, and floors, unless otherwise indicated.

B. Use manufacturer-approved pulling compound or lubricant where necessary; compound used must not deteriorate conductor or insulation. Do not exceed manufacturer's recommended maximum pulling tensions and sidewall pressure values.

C. Use pulling means; including fish tape, cable, rope, and basket-weave wire/cable grips that will not damage cables or raceway.

D. Install exposed cables parallel and perpendicular to surfaces of exposed structural members, and follow surface contours where possible.

E. Support cables according to Division 26 Section 0529.

F. Identify and color-code conductors and cables according to Division 26 Section 0553.

G. Tighten electrical connectors and terminals according to manufacturer's published torque-tightening values. If manufacturer's torque values are not indicated, use those specified in UL 486A and UL 486B.

H. Make splices and taps that are compatible with conductor material and that possess equivalent or better mechanical strength and insulation ratings than un-spliced conductors.

I. Wiring at Outlets: Install conductor at each outlet, with at least 6 inches of slack.

3.4 SLEEVE INSTALLATION FOR ELECTRICAL PENETRATIONS

A. Fire-Rated Assemblies: Install sleeves for penetrations of fire-rated floor and wall assemblies unless openings compatible with firestop system used are fabricated during construction of floor or wall.

B. Cut sleeves to length for mounting flush with both wall surfaces.

C. Extend sleeves installed in floors 2 inches above finished floor level.

D. Size pipe sleeves to provide 1/4 inch annular clear space between sleeve and cable unless sleeve seal is to be installed.

E. Seal space outside of sleeves with grout for penetrations of concrete and masonry, with approved joint compound for gypsum board assemblies.

F. Fire-Rated-Assembly Penetrations: Maintain indicated fire rating of walls, partitions, ceilings, and floors at cable penetrations.

3.5 SLEEVE-SEAL INSTALLATION

A. Use type and number of sealing elements recommended by manufacturer for cable material and size. Position cable in center of sleeve. Assemble mechanical sleeve seals and install in annular space between cable and sleeve. Tighten bolts against pressure plates that cause sealing elements to expand and make watertight seal.

3.6 FIRESTOPPING

A. Apply firestopping to electrical penetrations of fire-rated floor and wall assemblies to restore original fire-resistance rating of assembly.

END OF SECTION 26 0519

SECTION 26 0526 - GROUNDING AND BONDING FOR ELECTRICAL SYSTEMS

PART 1 - GENERAL

1.1 SUMMARY

A. This Section includes methods and materials for grounding systems and equipment.

1.2 QUALITY ASSURANCE

A. Electrical Components, Devices, and Accessories: Listed and labeled as defined in NFPA 70, Article 100, by a testing agency acceptable to authorities having jurisdiction, and marked for intended use.

B. Comply with UL 467 for grounding and bonding materials and equipment.

PART 2 - PRODUCTS

2.1 CONDUCTORS

A. Insulated Conductors: Copper wire or cable insulated for 600 V unless otherwise required by applicable Code or authorities having jurisdiction.

B. Bare Copper Conductors:
   1. Stranded Conductors: ASTM B 8.
   2. Tinned Conductors: ASTM B 33.
   3. Bonding Cable: 28 kcmil, 14 strands of No. 17 AWG conductor, 1/4 inch in diameter.
   4. Bonding Conductor: No. 4 or No. 6 AWG, stranded conductor.
   5. Bonding Jumper: Copper tape, braided conductors, terminated with copper ferrules; 1-5/8 inches wide and 1/16 inch thick.
   6. Tinned Bonding Jumper: Tinned-copper tape, braided conductors, terminated with copper ferrules; 1 and 5/8 inches wide and 1/16 inch thick.

2.2 CONNECTORS

A. Listed and labeled by a nationally recognized testing laboratory acceptable to authorities having jurisdiction for applications in which used, and for specific types, sizes, and combinations of conductors and other items connected.

B. Bolted Connectors for Conductors and Pipes: Copper or copper alloy, bolted pressure-type, with at least two bolts.

1. Pipe Connectors: Clamp type, sized for pipe.

C. Welded Connectors: Exothermic-welding kits of types recommended by kit manufacturer for materials being joined and installation conditions.

2.3 GROUNDING ELECTRODES

A. Ground Rods: Copper-clad steel; 5/8 inches in diameter by 96 inches long.

PART 3 - EXECUTION

3.1 APPLICATIONS

A. Conductors: Install stranded conductors, No. 6 AWG, unless otherwise indicated.

B. Underground Grounding Conductors: Install bare copper conductor, No. 2/0 AWG minimum. Bury at least 24 inches below grade.

C. Isolated Grounding Conductors: Green-colored insulation with continuous yellow stripe. On feeders with isolated ground, identify grounding conductor where visible to normal observation, with alternating bands of green and yellow tape, with at least three bands of green and two bands of yellow.

D. Conductor Terminations and Connections:
1. Pipe and Equipment Grounding Conductor Terminations: Bolted connectors.
2. Underground Connections: Welded connectors except at test wells and as otherwise indicated.
3. Connections to Ground Rods at Test Wells: Bolted connectors.
4. Connections to Structural Steel: Welded connectors.

3.2 EQUIPMENT GROUNDING

A. Install insulated equipment grounding conductors with the following items, in addition to those required by NFPA 70:
1. Feeders and branch circuits.
2. Lighting circuits.
3. Receptacle circuits.
4. Single-phase motor and appliance branch circuits.
5. Three-phase motor and appliance branch circuits.
6. Flexible raceway runs.
7. Armored and metal-clad cable runs.
8. Busway Supply Circuits: Install insulated equipment grounding conductor from grounding bus in the switchgear, switchboard, or distribution panel to equipment grounding bar terminal on busway.

9. Computer and Rack-Mounted Electronic Equipment Circuits: Install insulated equipment grounding conductor in branch-circuit runs from equipment-area power panels and power-distribution units.
10. X-Ray Equipment Circuits: Install insulated equipment grounding conductor in circuits supplying x-ray equipment.

B. Air-Duct Equipment Circuits: Install insulated equipment grounding conductor to duct-mounted electrical devices operating at 120 V and more, including air cleaners, heaters, dampers, humidifiers, and other duct electrical equipment. Bond conductor to each unit and to air duct and connected metallic piping.

C. Isolated Grounding Receptacle Circuits: Install an insulated equipment grounding conductor connected to the receptacle grounding terminal. Isolate conductor from raceway and from panelboard grounding terminals. Terminate at equipment grounding conductor terminal of the applicable derived system or service, unless otherwise indicated.

D. Isolated Equipment Enclosure Circuits: For designated equipment supplied by a branch circuit or feeder, isolate equipment enclosure from supply circuit raceway with a nonmetallic raceway fitting listed for the purpose. Install fitting where raceway enters enclosure, and install a separate insulated equipment grounding conductor. Isolate conductor from raceway and from panelboard grounding terminals. Terminate at equipment grounding conductor terminal of the applicable derived system or service, unless otherwise indicated.

E. Signal and Communication Equipment: For telephone, alarm, voice and data, and other communication equipment, provide No. 4 AWG minimum insulated grounding conductor in raceway from grounding electrode system to each service location, terminal cabinet, wiring closet, and central equipment location.
1. Service and Central Equipment Locations and Wiring Closets: Terminate grounding conductor on a 1/4 by 2 by 12 inch grounding bus.
2. Terminal Cabinets: Terminate grounding conductor on cabinet grounding terminal.

F. Poles Supporting Outdoor Lighting Fixtures: Install grounding electrode and a separate insulated equipment grounding conductor in addition to grounding conductor installed with branch-circuit conductors.

3.3 INSTALLATION

A. Grounding Conductors: Route along shortest and straightest paths possible, unless otherwise indicated or required by Code. Avoid obstructing access or placing conductors where they may be subjected to strain, impact, or damage.

B. Ground Rods: Drive rods until tops are 2 inches below finished floor or final grade, unless otherwise indicated.

1. Interconnect ground rods with grounding electrode conductor below grade and as otherwise indicated. Make connections without exposing steel or damaging coating, if any.
2. For grounding electrode system, install at least two rods spaced at least one-rod length from each other and located at least the same distance from other grounding electrodes, and connect to the service grounding electrode conductor.

C. Test Wells: Ground rod driven through drilled hole in bottom of handhole. Handholes are specified in Division 26 Section "Underground Ducts and Raceways for Electrical Systems", and shall be at least 12 inches deep, with cover.
   1. Test Wells: Install at least one test well for each service, unless otherwise indicated. Install at the ground rod electrically closest to service entrance. Set top of test well flush with finished grade or floor.

D. Bonding Straps and Jumpers: Install in locations accessible for maintenance, except where routed through short lengths of conduit.
   1. Bonding to Structure: Bond straps directly to basic structure, taking care not to penetrate any adjacent parts.
   2. Bonding to Equipment Mounted on Vibration Isolation Hangers and Supports: Install so vibration is not transmitted to rigidly mounted equipment.
   3. Use exothermic-welded connectors for outdoor locations, but if a disconnect-type connection is required, use a bolted clamp.

E. Grounding and Bonding for Piping:
   1. Metal Water Service Pipe: Install insulated copper grounding conductors, in conduit, from building's main service equipment, or grounding bus, to main metal water service entrances to building. Connect grounding conductors to main metal water service pipes, using a bolted clamp connector or by bolting a lug-type connector to a pipe flange, using one of the lug bolts of the flange. Where a dielectric main water fitting is installed, connect grounding conductor on street side of fitting. Bond metal grounding conductor conduit or sleeve to conductor at each end.
   2. Water Meter Piping: Use braided-type bonding jumpers to electrically bypass water meters. Connect to pipe with a bolted connector.
   3. Bond each aboveground portion of gas piping system downstream from equipment shutoff valve.

F. Bonding Interior Metal Ducts: Bond metal air ducts to equipment grounding conductors of associated fans, blowers, electric heaters, and air cleaners. Install bonding jumper to bond across flexible duct connections to achieve continuity.

END OF SECTION 26 0526

SECTION 26 0529 - HANGERS AND SUPPORTS FOR ELECTRICAL SYSTEMS

PART 1 - GENERAL

1.1 SUMMARY

A. This Section includes the following:
   1. Hangers and supports for electrical equipment and systems.
   2. Construction requirements for concrete bases.

1.2 DEFINITIONS

A. EMT: Electrical metallic tubing.

B. RMC: Rigid metal conduit.

1.3 PERFORMANCE REQUIREMENTS

A. Rated Strength: Adequate in tension, shear, and pullout force to resist maximum loads calculated, or imposed for this Project, with a minimum structural safety factor of 5 times the applied force.

1.4 SUBMITTALS

A. Welding certificates.

1.5 QUALITY ASSURANCE

A. Welding: Qualify procedures and personnel according to AWS D1.1/D1.1M, “Structural Welding Code – Steel”.

B. Comply with NFPA 70.

1.6 COORDINATION

A. Coordinate size and location of concrete bases. Cast anchor-bolt inserts into bases. Concrete, reinforcement, and formwork requirements are specified in Division 03.

PART 2 - PRODUCTS

2.1 SUPPORT, ANCHORAGE, AND ATTACHMENT COMPONENTS

A. Steel Slotted Support Systems: Comply with MFMA-4, factory-fabricated components for field assembly.
   1. Available Manufacturers: Subject to compliance with requirements, manufacturers offering products that may be incorporated into the Work include, but are not limited to, the following:
      a. Allied Tube & Conduit.
      b. Cooper B-Line, Inc.; a division of Cooper Industries.
      c. ERICO International Corporation.
      d. GS Metals Corp.
      e. Thomas & Betts Corporation.
      f. Unistrut; Tyco International, Ltd.
      g. Wesanco, Inc.
   2. Metallic Coatings: Hot-dip galvanized after fabrication and applied according to MFMA-4.
   3. Nonmetallic Coatings: Manufacturer's standard PVC, polyurethane, or polyester coating applied according to MFMA-4.
   4. Painted Coatings: Manufacturer's standard painted coating applied according to MFMA-4.
   5. Channel Dimensions: Selected for applicable load criteria.

B. Nonmetallic Slotted Support Systems: Structural-grade, factory-formed, glass-fiber-resin channels and angles with 9/16 inch diameter holes at a maximum of 8 inches o.c., in at least 1 surface.
   1. Available Manufacturers: Subject to compliance with requirements, manufacturers offering products that may be incorporated into the Work include, but are not limited to, the following:
      a. Allied Tube & Conduit.
      b. Cooper B-Line, Inc.; a division of Cooper Industries.
      c. Fabco Plastics Wholesale Limited.
      d. Seasafe, Inc.
   2. Fittings and Accessories: Products of channel and angle manufacturer and designed for use with those items.
   3. Fitting and Accessory Materials: Same as channels and angles.
   4. Rated Strength: Selected to suit applicable load criteria.

C. Raceway and Cable Supports: As described in NECA 1 and NECA 101.

D. Conduit and Cable Support Devices: Steel hangers, clamps, and associated fittings, designed for types and sizes of raceway or cable to be supported.

E. Support for Conductors in Vertical Conduit: Factory-fabricated assembly consisting of threaded body and insulating wedging plug or plugs for non-armored electrical

conductors or cables in riser conduits. Plugs shall have number, size, and shape of conductor gripping pieces as required to suit individual conductors or cables supported. Body shall be malleable iron.

F. Structural Steel for Fabricated Supports and Restraints: ASTM A 36/A 36M, steel plates, shapes, and bars; black and galvanized.

G. Mounting, Anchoring, and Attachment Components: Items for fastening electrical items or their supports to building surfaces include the following:
   1. Powder-Actuated Fasteners: Threaded-steel stud, for use in hardened portland cement concrete, steel, or wood, with tension, shear, and pullout capacities appropriate for supported loads and building materials where used.
      a. Available Manufacturers: Subject to compliance with requirements, manufacturers offering products that may be incorporated into the Work include, but are not limited to, the following:
         1) Hilti Inc.
         2) ITW Ramset/Red Head; a division of Illinois Tool Works, Inc.
         3) MKT Fastening, LLC.
         4) Simpson Strong-Tie Co., Inc.; Masterset Fastening Systems Unit.
   2. Mechanical-Expansion Anchors: Insert-wedge-type, galvanized or stainless steel, for use in hardened portland cement concrete with tension, shear, and pullout capacities appropriate for supported loads and building materials in which used.
      a. Available Manufacturers: Subject to compliance with requirements, manufacturers offering products that may be incorporated into the Work include, but are not limited to, the following:
      b. Manufacturers: Subject to compliance with requirements, provide products by one of the following:
         1) Cooper B-Line, Inc.; a division of Cooper Industries.
         2) Empire Tool and Manufacturing Co., Inc.
         3) Hilti Inc.
         4) ITW Ramset/Red Head; a division of Illinois Tool Works, Inc.
         5) MKT Fastening, LLC.
   3. Concrete Inserts: Steel or malleable-iron, slotted support system units similar to MSS Type 18; complying with MFMA-4 or MSS SP-58.
   4. Clamps for Attachment to Steel Structural Elements: MSS SP-58, type suitable for attached structural element.
   5. Through Bolts: Structural type, hex head, and high strength. Comply with ASTM A 325.
   6. Toggle Bolts: All-steel springhead type.
   7. Hanger Rods: Threaded steel.

2.2 FABRICATED METAL EQUIPMENT SUPPORT ASSEMBLIES

A. Description: Welded or bolted, structural-steel shapes, shop or field fabricated to fit dimensions of supported equipment.

PART 3 - EXECUTION

3.1 APPLICATION

A. Comply with NECA 1 and NECA 101 for application of hangers and supports for electrical equipment and systems except if requirements in this Section are stricter.

B. Maximum Support Spacing and Minimum Hanger Rod Size for Raceway: Space supports for EMT and RMC as required by NFPA 70. Minimum rod size shall be 1/4 inch in diameter.

C. Multiple Raceways or Cables: Install trapeze-type supports fabricated with steel slotted support system, sized so capacity can be increased by at least 25 percent in future without exceeding specified design load limits.
   1. Secure raceways and cables to these supports with two-bolt conduit clamps, single-bolt conduit clamps or single-bolt conduit clamps using spring friction action for retention in support channel.

D. Spring-steel clamps designed for supporting single conduits without bolts may be used for 1 and 1/2 inch and smaller raceways serving branch circuits and communication systems above suspended ceilings and for fastening raceways to trapeze supports.

3.2 SUPPORT INSTALLATION

A. Comply with NECA 1 and NECA 101 for installation requirements except as specified in this Article.

B. Raceway Support Methods: In addition to methods described in NECA 1, EMT and RMC may be supported by openings through structure members, as permitted in NFPA 70.

C. Strength of Support Assemblies: Where not indicated, select sizes of components so strength will be adequate to carry present and future static loads within specified loading limits. Minimum static design load used for strength determination shall be weight of supported components plus 200 lb.

D. Mounting and Anchorage of Surface-Mounted Equipment and Components: Anchor and fasten electrical items and their supports to building structural elements by the following methods unless otherwise indicated by code:
   1. To Wood: Fasten with lag screws or through bolts.
   2. To New Concrete: Bolt to concrete inserts.
   3. To Masonry: Approved toggle-type bolts on hollow masonry units and expansion anchor fasteners on solid masonry units.
   4. To Existing Concrete: Expansion anchor fasteners.
   5. Instead of expansion anchors, powder-actuated driven threaded studs provided with lock washers and nuts may be used in existing standard-weight concrete 4

inches thick or greater. Do not use for anchorage to lightweight-aggregate concrete or for slabs less than 4 inches thick.

6. To Steel: Welded threaded studs complying with AWS D1.1/D1.1M, with lock washers and nuts, Beam clamps (MSS Type 19, 21, 23, 25, or 27) complying with MSS SP-69 or Spring-tension clamps.
7. To Light Steel: Sheet metal screws.
8. Items Mounted on Hollow Walls and Nonstructural Building Surfaces: Mount cabinets, panelboards, disconnect switches, control enclosures, pull and junction boxes, transformers, and other devices on slotted-channel racks attached to substrate by means that meet strength and anchorage requirements.

E. Drill holes for expansion anchors in concrete at locations and to depths that avoid reinforcing bars.

3.3 INSTALLATION OF FABRICATED METAL SUPPORTS

A. Cut, fit, and place miscellaneous metal supports accurately in location, alignment, and elevation to support and anchor electrical materials and equipment.

B. Field Welding: Comply with AWS D1.1/D1.1M.

3.4 CONCRETE BASES

A. Construct concrete bases of dimensions indicated but not less than 4 inches larger in both directions than supported unit, and so anchors will be a minimum of 10 bolt diameters from edge of the base.

B. Use 3,000 psi, 28 day compressive-strength concrete. Concrete materials, reinforcement, and placement requirements are specified in Division 03 Section “Cast-in-Place Concrete”.

C. Anchor equipment to concrete base.
1. Place and secure anchorage devices. Use supported equipment manufacturer's setting drawings, templates, diagrams, instructions, and directions furnished with items to be embedded.
2. Install anchor bolts to elevations required for proper attachment to supported equipment.
3. Install anchor bolts according to anchor-bolt manufacturer's written instructions.
4. Place and secure the RPM anchor bolts with (2) GFE anchor bolt templates and anchor bolt rebar cage as described in the drawings. The templates and anchor bolts shall be securely fastened to the foundation forms with care taken to minimize interference with the foundation rebar cage.

3.5 PAINTING

A. Touchup: Clean field welds and abraded areas of shop paint. Paint exposed areas immediately after erecting hangers and supports. Use same materials as used for shop painting. Comply with SSPC-PA 1 requirements for touching up field-painted surfaces.
   1. Apply paint by brush or spray to provide minimum dry film thickness of 2.0 mils.

B. Galvanized Surfaces: Clean welds, bolted connections, and abraded areas.

END OF SECTION 26 0529

SECTION 26 0533 - RACEWAY AND BOXES FOR ELECTRICAL SYSTEMS

PART 1 - GENERAL

1.1 SUMMARY

A. This Section includes raceways, fittings, boxes, enclosures, and cabinets for electrical wiring.

B. Related Sections include the following:
   1. Division 26 Section 0543 for exterior ductbanks, manholes, and underground utility construction.

1.2 DEFINITIONS

A. EMT: Electrical metallic tubing.

B. LFMC: Liquidtight flexible metal conduit.

C. RMC: Rigid metallic conduit.

D. RNC: Rigid nonmetallic conduit.

1.3 QUALITY ASSURANCE

A. Electrical Components, Devices, and Accessories: Listed and labeled as defined in NFPA 70, Article 100, by a testing agency acceptable to authorities having jurisdiction, and marked for intended use.

B. Comply with NFPA 70.

PART 2 - PRODUCTS

2.1 METAL CONDUIT AND TUBING

A. Available Manufacturers: Subject to compliance with requirements, manufacturers offering products that may be incorporated into the Work include, but are not limited to, the following:
   1. AFC Cable Systems, Inc.
   2. Alflex Inc.
   3. Allied Tube & Conduit; a Tyco International Ltd. Co.
   4. Anamet Electrical, Inc.; Anaconda Metal Hose.

5. Electri-Flex Co.
6. Manhattan/CDT/Cole-Flex.
7. Maverick Tube Corporation.
8. O-Z Gedney; a unit of General Signal.
9. Wheatland Tube Company.

B. Rigid Steel Conduit: ANSI C80.1.

C. EMT: ANSI C80.3.

D. LFMC: Flexible steel conduit with PVC jacket.

E. Fittings for Conduit (Including Flexible and Liquidtight), EMT, and Cable: NEMA FB 1; listed for type and size raceway with which used, and for application and environment in which installed.
1. Conduit Fittings for Hazardous (Classified) Locations: Comply with UL 886.
2. Fittings for EMT: Steel, set-screw or compression type where exposed to weather.
3. Coating for Fittings for PVC-Coated Conduit: Minimum thickness, 0.040 inch, with overlapping sleeves protecting threaded joints.

F. Joint Compound for Rigid Metallic (Steel) Conduit: Listed for use in cable connector assemblies, and compounded for use to lubricate and protect threaded raceway joints from corrosion and enhance their conductivity.

2.2 NONMETALLIC CONDUIT AND TUBING

A. Available Manufacturers: Subject to compliance with requirements, manufacturers offering products that may be incorporated into the Work include, but are not limited to, the following:
1. AFC Cable Systems, Inc.
2. Anamet Electrical, Inc.; Anaconda Metal Hose.
3. Arnco Corporation.
4. CANTEX Inc.
5. CertainTeed Corp.; Pipe & Plastics Group.
6. Condux International, Inc.
7. ElecSYS, Inc.
8. Electri-Flex Co.
9. Lamson & Sessions; Carlon Electrical Products.
10. Manhattan/CDT/Cole-Flex.
11. RACO; a Hubbell Company.
12. Thomas & Betts Corporation.

B. RNC: NEMA TC 2, Type EPC-80-PVC, unless otherwise indicated.

C. Fittings for RNC: NEMA TC 3; match to conduit or tubing type and material.

2.3 OPTICAL FIBER/COMMUNICATIONS CABLE RACEWAY AND FITTINGS

A. Available Manufacturers: Subject to compliance with requirements, manufacturers offering products that may be incorporated into the Work include, but are not limited to, the following:
   1. Arnco Corporation.
   2. Endot Industries Inc.
   3. IPEX Inc.
   4. Lamson & Sessions; Carlon Electrical Products.

B. Description: Comply with UL 2024; flexible type, approved for plenum, riser or general-use installation.

2.4 METAL WIREWAYS

A. Available Manufacturers: Subject to compliance with requirements, manufacturers offering products that may be incorporated into the Work include, but are not limited to, the following:
   1. Cooper B-Line, Inc.
   2. Hoffman.
   3. Square D; Schneider Electric.
   4. Wiegmann.

B. Description: Sheet metal sized and shaped as indicated, NEMA 250, Type 4X, unless otherwise indicated.

C. Fittings and Accessories: Include couplings, offsets, elbows, expansion joints, adapters, hold-down straps, end caps, and other fittings to match and mate with wireways as required for complete system.

D. Wireway Covers: Hinged type Screw-cover type Flanged-and-gasketed type.

E. Finish: Manufacturer's standard enamel finish.

2.5 NONMETALLIC WIREWAYS

A. Available Manufacturers: Subject to compliance with requirements, manufacturers offering products that may be incorporated into the Work include, but are not limited to, the following:
   1. Hoffman.
   2. Lamson & Sessions; Carlon Electrical Products.
   3. Cooper B-Line, Inc.
   4. Wiegmann.

B. Description: Fiberglass polyester, extruded and fabricated to size and shape indicated, with no holes or knockouts. Cover is gasketed with oil-resistant gasket material and

fastened with captive screws treated for corrosion resistance. Connections are flanged, with stainless-steel screws and oil-resistant gaskets.

C. Description: PVC plastic, extruded and fabricated to size and shape indicated, with snap-on cover and mechanically coupled connections with plastic fasteners.

D. Fittings and Accessories: Include couplings, offsets, elbows, expansion joints, adapters, hold-down straps, end caps, and other fittings to match and mate with wireways as required for complete system.

2.6 SURFACE RACEWAYS

A. Surface Metal Raceways: Painted or dipped galvanized steel with snap-on covers.
   1. Available Manufacturers: Subject to compliance with requirements, manufacturers offering products that may be incorporated into the Work include, but are not limited to, the following:
      a. Thomas & Betts Corporation.
      b. Walker Systems, Inc.; Wiremold Company (The).
      c. Wiremold Company (The); Electrical Sales Division.

B. Surface Nonmetallic Raceways: Two-piece construction, manufactured of rigid PVC.
   1. Available Manufacturers: Subject to compliance with requirements, manufacturers offering products that may be incorporated into the Work include, but are not limited to, the following:
      a. Butler Manufacturing Company; Walker Division.
      b. Enduro Systems, Inc.; Composite Products Division.
      c. Hubbell Incorporated; Wiring Device-Kellems Division.
      d. Lamson & Sessions; Carlon Electrical Products.
      e. Panduit Corp.
      f. Walker Systems, Inc.; Wiremold Company (The).
      g. Wiremold Company (The); Electrical Sales Division.

2.7 BOXES, ENCLOSURES, AND CABINETS

A. Available Manufacturers: Subject to compliance with requirements, manufacturers offering products that may be incorporated into the Work include, but are not limited to, the following:
   1. Cooper Crouse-Hinds; Div. of Cooper Industries, Inc.
   2. EGS/Appleton Electric.
   3. Erickson Electrical Equipment Company.
   4. Hoffman.
   5. Hubbell Incorporated; Killark Electric Manufacturing Co. Division.
   6. O-Z/Gedney; a unit of General Signal.
   7. RACO; a Hubbell Company.
   8. Robroy Industries, Inc.; Enclosure Division.
   9. Scott Fetzer Co.; Adalet Division.

10. Spring City Electrical Manufacturing Company.
11. Thomas & Betts Corporation.
12. Walker Systems, Inc.; Wiremold Company (The).
13. Wiegmann.

B. Sheet Metal Outlet and Device Boxes: NEMA OS 1.

C. Cast-Metal Outlet and Device Boxes: NEMA FB 1, ferrous alloy, Type FD, with gasketed cover.

D. Nonmetallic Outlet and Device Boxes: NEMA OS 2.

E. Small Sheet Metal Pull and Junction Boxes: NEMA OS 1.

F. Cast-Metal Access, Pull, and Junction Boxes: NEMA FB 1, galvanized, cast iron with gasketed cover.

G. Hinged-Cover Enclosures: NEMA 250, Type 4X, with continuous-hinge cover with flush latch, unless otherwise indicated.
1. Metal Enclosures: Steel, finished inside and out with manufacturer's standard enamel.
2. Nonmetallic Enclosures: Plastic.

H. Cabinets:
1. NEMA 250, Type 4X, galvanized-steel box with removable interior panel and removable front, finished inside and out with manufacturer's standard enamel.
2. Hinged door in front cover with flush latch and concealed hinge.
3. Key latch to match panelboards.
4. Metal barriers to separate wiring of different systems and voltage.
5. Accessory feet where required for freestanding equipment.

2.8 HANDHOLES AND BOXES FOR EXTERIOR UNDERGROUND WIRING

A. Description: Comply with SCTE 77.
1. Color of Frame and Cover: Gray.
2. Configuration: Units shall be designed for flush burial and have closed bottom, unless otherwise indicated.
3. Cover: Weatherproof, secured by tamper-resistant locking devices and having structural load rating of 120 KIP.
4. Cover Finish: Nonskid finish shall have a minimum coefficient of friction of 0.50.
5. Cover Legend: Molded lettering, “ELECTRIC”. “TELEPHONE”, as indicated for each service.
6. Conduit Entrance Provisions: Conduit-terminating fittings shall mate with entering ducts for secure, fixed installation in enclosure wall.
7. Handholes 12 inches wide by 24 inches long and larger shall have inserts for cable racks and pulling-in irons installed before concrete is poured.

B. Polymer-Concrete Handholes and Boxes with Polymer-Concrete Cover: Molded of sand and aggregate, bound together with polymer resin, and reinforced with steel or fiberglass or a combination of the two.
   1. Available Manufacturers: Subject to compliance with requirements, manufacturers offering products that may be incorporated into the Work include, but are not limited to, the following:
   2. Basis-of-Design Product: Subject to compliance with requirements, provide the product indicated on Drawings or a comparable product by one of the following:
      a. Armorcast Products Company.
      b. Carson Industries LLC.
      c. CDR Systems Corporation.
      d. NewBasis.

C. Fiberglass Handholes and Boxes with Polymer-Concrete Frame and Cover: Sheet-molded, fiberglass-reinforced, polyester-resin enclosure joined to polymer-concrete top ring or frame.
   1. Available Manufacturers: Subject to compliance with requirements, manufacturers offering products that may be incorporated into the Work include, but are not limited to, the following:
   2. Basis-of-Design Product: Subject to compliance with requirements, provide the product indicated on Drawings or a comparable product by one of the following:
      a. Armorcast Products Company.
      b. Carson Industries LLC.
      c. Christy Concrete Products.
      d. Synertech Moulded Products, Inc.; a division of Oldcastle Precast.

D. Fiberglass Handholes and Boxes: Molded of fiberglass-reinforced polyester resin, with covers of hot-dip galvanized-steel diamond plate.
   1. Available Manufacturers: Subject to compliance with requirements, manufacturers offering products that may be incorporated into the Work include, but are not limited to, the following:
   2. Basis-of-Design Product: Subject to compliance with requirements, provide the product indicated on Drawings or a comparable product by one of the following:
      a. Carson Industries LLC.
      b. Christy Concrete Products.
      c. Nordic Fiberglass, Inc.

2.9 SLEEVES FOR RACEWAYS

A. Steel Pipe Sleeves: ASTM A 53/A 53M, Type E, Grade B, Schedule 40, galvanized steel, plain ends.

B. Cast-Iron Pipe Sleeves: Cast or fabricated “wall pipe”, equivalent to ductile-iron pressure pipe, with plain ends and integral waterstop, unless otherwise indicated.

C. Sleeves for Rectangular Openings: Galvanized sheet steel with minimum 0.052 or 0.138 inch thickness as indicated and of length to suit application.

2.10 SLEEVE SEALS

A. Available Manufacturers: Subject to compliance with requirements, manufacturers offering products that may be incorporated into the Work include, but are not limited to, the following:

B. Manufacturers: Subject to compliance with requirements, provide products by one of the following:
   1. Advance Products & Systems, Inc.
   2. Calpico, Inc.
   3. Metraflex Co.
   4. Pipeline Seal and Insulator, Inc.

C. Description: Modular sealing device, designed for field assembly, to fill annular space between sleeve and cable.
   1. Sealing Elements: EPDM interlocking links shaped to fit surface of cable or conduit. Include type and number required for material and size of raceway or cable.
   2. Pressure Plates: Plastic. Include two for each sealing element.
   3. Connecting Bolts and Nuts: Carbon steel with corrosion-resistant coating of length required to secure pressure plates to sealing elements. Include one for each sealing element.

PART 3 - EXECUTION

3.1 RACEWAY APPLICATION

A. Outdoors: Apply raceway products as specified below, unless otherwise indicated:
   1. Exposed Conduit: Rigid metallic conduit. See drawing Sheet 2.
   2. Concealed Conduit, Aboveground: EMT. See drawing Sheet 2.
   3. Underground Conduit: RNC, Type EPC-80-PVC, direct buried.
   4. Verticals runs for stub-ups transitioning from underground to above ground shall be polymer coated RMC or approved equal.
   5. Connection to Vibrating Equipment (Including Transformers and Hydraulic, Pneumatic, Electric Solenoid, or Motor-Driven Equipment): LFMC.
   6. Boxes and Enclosures, Aboveground: NEMA 250, Type 4X.
   7. Application of Handholes and Boxes for Underground Wiring:
      a. Handholes and Pull Boxes in Driveway, Parking Lot, and Off-Roadway Locations, Subject to Occasional, Nondeliberate Loading by Heavy Vehicles: Polymer concrete Fiberglass enclosures with polymer-concrete frame and cover Fiberglass-reinforced polyester resin, SCTE 77, Tier 15 structural load rating.

b. Handholes and Pull Boxes in Sidewalk and Similar Applications with a Safety Factor for Nondeliberate Loading by Vehicles: Heavy-duty fiberglass units with polymer-concrete frame and cover, SCTE 77, Tier 8 structural load rating.
c. Handholes and Pull Boxes Subject to Light-Duty Pedestrian Traffic Only: Fiberglass-reinforced polyester resin, structurally tested according to SCTE 77 with 3,000 lbf vertical loading.

B. Comply with the following indoor applications, unless otherwise indicated:
1. Exposed, Not Subject to Physical Damage: EMT.
2. Exposed, Not Subject to Severe Physical Damage: EMT.
3. Exposed and Subject to Severe Physical Damage: Rigid metallic conduit. Includes raceways in the following locations:
a. Loading dock.
b. Corridors used for traffic of mechanized carts, forklifts, and pallet-handling units.
c. Mechanical rooms.
4. Concealed in Ceilings and Interior Walls and Partitions: EMT.
5. Connection to Vibrating Equipment (Including Transformers and Hydraulic, Pneumatic, Electric Solenoid, or Motor-Driven Equipment): FMC, except use LFMC in damp or wet locations.
6. Damp or Wet Locations: Rigid metallic conduit.
7. Raceways for Optical Fiber or Communications Cable in Spaces Used for Environmental Air: Plenum-type, optical fiber/communications cable raceway.
8. Raceways for Optical Fiber or Communications Cable Risers in Vertical Shafts: Riser-type, optical fiber/communications cable raceway.
9. Raceways for Concealed General Purpose Distribution of Optical Fiber or Communications Cable: General-use, optical fiber/communications cable raceway Plenum-type, optical fiber/communications cable raceway.
10. Boxes and Enclosures: NEMA 250, Type 1, except use NEMA 250, Type 4X, in damp or wet locations.

C. Minimum Raceway Size: 3/4 inch trade size.

D. Raceway Fittings: Compatible with raceways and suitable for use and location.
1. Rigid Metallic Conduit: Use threaded rigid steel conduit fittings, unless otherwise indicated.
2. EMT: Use compression type steel conduit fittings where exposed to weather, unless otherwise indicated.

E. Install nonferrous conduit or tubing for circuits operating above 60 Hz. Where aluminum raceways are installed for such circuits and pass through concrete, install in nonmetallic sleeve.

F. Do not install aluminum conduits in contact with concrete.

3.2 INSTALLATION

A. Comply with NECA 1 for installation requirements applicable to products specified in Part 2 except where requirements on Drawings or in this Article are stricter.

B. Keep raceways at least 6 inches away from parallel runs of flues and steam or hot-water pipes. Install horizontal raceway runs above water and steam piping.

C. Complete raceway installation before starting conductor installation.

D. Support raceways as specified in Division 26 Section 0529.

E. Arrange stub-ups so curved portions of bends are not visible above the finished slab.

F. Install no more than the equivalent of three 90-degree bends in any conduit run except for communications conduits, for which fewer bends are allowed.

G. Conceal conduit and EMT within finished walls, ceilings, and floors, unless otherwise indicated.

H. Raceways Embedded in Slabs:
   1. Run conduit larger than 1 inch trade size, parallel or at right angles to main reinforcement. Where at right angles to reinforcement, place conduit close to slab support.
   2. Arrange raceways to cross building expansion joints at right angles with expansion fittings.
   3. Change from RNC, Type EPC-80-PVC, to Rigid Metallic Conduit 12” before transition from horizontal to vertical.

I. Threaded Conduit Joints, Exposed to Wet, Damp, Corrosive, or Outdoor Conditions: Apply listed compound to threads of raceway and fittings before making up joints. Follow compound manufacturer's written instructions.

J. Raceway Terminations at Locations Subject to Moisture or Vibration: Use insulating bushings to protect conductors, including conductors smaller than No. 4 AWG.

K. Install pull wires in empty raceways. Use polypropylene or monofilament plastic line with not less than 200 lb tensile strength. Leave at least 12 inches of slack at each end of pull wire.

L. Raceways for Optical Fiber and Communications Cable: Install raceways, metallic and nonmetallic, rigid and flexible, as follows:
   1. 3/4 Inch Trade Size and Smaller: Install raceways in maximum lengths of 50 feet.
   2. 1 Inch Trade Size and Larger: Install raceways in maximum lengths of 75 feet.
   3. Install with a maximum of two 90 degree bends or equivalent for each length of raceway unless Drawings show stricter requirements. Separate lengths with pull or junction boxes or terminations at distribution frames or cabinets where necessary to comply with these requirements.

M. Install raceway sealing fittings at suitable, approved, and accessible locations and fill them with listed sealing compound. For concealed raceways, install each fitting in a flush steel box with a blank cover plate having a finish similar to that of adjacent plates or surfaces. Install raceway sealing fittings at the following points:
   1. Where conduits pass from warm to cold locations, such as boundaries of refrigerated spaces.
   2. Where otherwise required by NFPA 70.

N. Expansion-Joint Fittings for RNC: Install in each run of conduit that is located where environmental temperature change may exceed 30 deg F, and that has straight-run length that exceeds 25 feet.
   1. Install expansion-joint fittings for each of the following locations, and provide type and quantity of fittings that accommodate temperature change listed for location:
      a. Outdoor Locations Not Exposed to Direct Sunlight: 125 deg F temperature change.
   2. Install fitting(s) that provide expansion and contraction for at least 0.00041 inch per foot of length of straight run per deg F of temperature change.
   3. Install each expansion-joint fitting with position, mounting, and piston setting selected according to manufacturer's written instructions for conditions at specific location at the time of installation.

O. Flexible Conduit Connections: Use maximum of 72 inches of flexible conduit for equipment subject to vibration, noise transmission, or movement; and for transformers and motors.
   1. Use LFMC in damp or wet locations subject to severe physical damage.
   2. Use LFMC or LFNC in damp or wet locations not subject to severe physical damage.

P. Recessed Boxes in Masonry Walls: Saw-cut opening for box in center of cell of masonry block, and install box flush with surface of wall.

3.3 INSTALLATION OF UNDERGROUND CONDUIT

A. Direct-Buried Conduit:
   1. Excavate trench bottom to provide firm and uniform support for conduit. Prepare trench bottom for pipe less than 6 inches in nominal diameter.
   2. Install backfill.
   3. After installing conduit, backfill and compact. Start at tie-in point, and work toward end of conduit run, leaving conduit at end of run free to move with expansion and contraction as temperature changes during this process. Firmly hand-tamp backfill around conduit to provide maximum supporting strength. After placing controlled backfill to within 12 inches of finished grade, make final conduit connection at end of run and complete backfilling with normal compaction.

4. Install manufactured duct elbows for stub-ups at poles and equipment and at building entrances through the floor, unless otherwise indicated. Encase elbows for stub-up ducts throughout the length of the elbow.
5. Install manufactured rigid steel conduit elbows for stub-ups at poles and equipment and at building entrances through the floor.
   a. Couple steel conduits to ducts with adapters designed for this purpose, and encase coupling with 3 inches of concrete.
   b. For stub-ups at equipment mounted on outdoor concrete bases, extend steel conduit horizontally a minimum of 60 inches from edge of equipment pad or foundation. Install insulated grounding bushings on terminations at equipment.
6. Warning Tape: For landscaped areas bury warning tape approximately 12 inches below grade above all concrete-encased ducts and duct banks. Under asphalt bury warning tape approximately 6 inches below grade above all concrete-encased ducts and duct banks. Align tape parallel to and within 3 inches of the centerline of duct bank. Provide an additional warning tape for each 12 inch increment of duct-bank width over a nominal 18 inches. Space additional tapes 12 inches apart, horizontally.

3.4 INSTALLATION OF UNDERGROUND HANDHOLES AND BOXES

A. Install handholes and boxes level and plumb and with orientation and depth coordinated with connecting conduits to minimize bends and deflections required for proper entrances.

B. Unless otherwise indicated, support units on a level bed of crushed stone or gravel, graded from 1/2 inch sieve to No. 4 sieve and compacted to same density as adjacent undisturbed earth.

C. Elevation: In paved areas, set so cover surface will be flush with finished grade. Set covers of other enclosures 1 inch above finished grade.

D. Install handholes and boxes with bottom below the frost line, below grade.

E. Install removable hardware, including pulling eyes, cable stanchions, cable arms, and insulators, as required for installation and support of cables and conductors and as indicated. Select arm lengths to be long enough to provide spare space for future cables, but short enough to preserve adequate working clearances in the enclosure.

F. Field-cut openings for conduits according to enclosure manufacturer's written instructions. Cut wall of enclosure with a tool designed for material to be cut. Size holes for terminating fittings to be used, and seal around penetrations after fittings are installed.

3.5 SLEEVE INSTALLATION FOR ELECTRICAL PENETRATIONS

A. Use pipe sleeves for penetrations of fire-rated floor and wall assemblies unless penetration arrangement requires rectangular sleeved opening.

B. Rectangular Sleeve Minimum Metal Thickness:
   1. For sleeve cross-section rectangle perimeter less than 50 inches and no side greater than 16 inches, thickness shall be 0.052 inch.
   2. For sleeve cross-section rectangle perimeter equal to, or greater than, 50 inches and 1 or more sides equal to, or greater than, 16 inches, thickness shall be 0.138 inch.

C. Fire-Rated Assemblies: Install sleeves for penetrations of fire-rated floor and wall assemblies unless openings compatible with firestop system used are fabricated during construction of floor or wall.

D. Cut sleeves to length for mounting flush with both surfaces of walls.

E. Extend sleeves installed in floors 2 inches above finished floor level.

F. Size pipe sleeves to provide 1/4 inch annular clear space between sleeve and raceway unless sleeve seal is to be installed.

G. Seal space outside of sleeves with grout for penetrations of concrete and masonry.

H. Fire-Rated-Assembly Penetrations: Maintain indicated fire rating of walls, partitions, ceilings, and floors at raceway penetrations. Install sleeves and seal with firestop materials.

3.6 SLEEVE-SEAL INSTALLATION

A. Install to seal underground, exterior wall penetrations.

B. Use type and number of sealing elements recommended by manufacturer for raceway material and size. Position raceway in center of sleeve. Assemble mechanical sleeve seals and install in annular space between raceway and sleeve. Tighten bolts against pressure plates that cause sealing elements to expand and make watertight seal.

3.7 FIRESTOPPING

A. Apply firestopping to electrical penetrations of fire-rated floor and wall assemblies to restore original fire-resistance rating of assembly.

3.8 PROTECTION

A. Provide final protection and maintain conditions that ensure coatings, finishes, and cabinets are without damage or deterioration at time of Substantial Completion.
   1. Repair damage to galvanized finishes with zinc-rich paint recommended by manufacturer.
   2. Repair damage to PVC or paint finishes with matching touchup coating recommended by manufacturer.

3.9 CLASS I, DIVISION I AND II LOCATIONS

A. Comply with NEC 501. In particular:
   1. Equipment installed in classified area shall be labeled for use in this space.
   2. Wiring methods within Division I and Division II areas shall meet NEC 501.10.
   3. Per NEC 501.15, a conduit seal shall be required in each conduit crossing the classified area boundary. Conduit seal to be installed within 10’ of the classified boundary.

END OF SECTION 26 0533

SECTION 26 0543 - UNDERGROUND DUCTS AND RACEWAYS FOR ELECTRICAL SYSTEMS

PART 1 - GENERAL

1.1 SUMMARY

A. This Section includes the following:
   1. Conduit, ducts, and duct accessories for direct-buried and concrete-encased duct banks, and in single duct runs.
   2. Handholes and boxes.
   3. Manholes.

1.2 QUALITY ASSURANCE

A. Comply with ANSI C2.

B. Comply with NFPA 70.

PART 2 - PRODUCTS

2.1 CONDUIT

A. Rigid Steel Conduit: Galvanized. Comply with ANSI C80.1.

B. RNC: NEMA TC 2, Type EPC-80-PVC, UL 651, with matching fittings by same manufacturer as the conduit, complying with NEMA TC 3 and UL 514B.

2.2 NONMETALLIC DUCTS AND DUCT ACCESSORIES

A. Available Manufacturers: Subject to compliance with requirements, manufacturers offering products that may be incorporated into the Work include, but are not limited to, the following:
   1. ARNCO Corp.
   2. Beck Manufacturing.
   3. Cantex, Inc.
   4. CertainTeed Corp.; Pipe & Plastics Group.
   5. Condux International, Inc.
   6. ElecSys, Inc.
   7. Electri-Flex Company.
   8. IPEX Inc.
   9. Lamson & Sessions; Carlon Electrical Products.

10. Manhattan/CDT; a division of Cable Design Technologies.
11. Spiraduct/AFC Cable Systems, Inc.

B. Underground Plastic Utilities Duct: NEMA TC 6 & 8, Type EB-20-PVC, ASTM F 512, UL 651A, with matching fittings by the same manufacturer as the duct, complying with NEMA TC 9.

C. Duct Accessories:
1. Duct Separators: Factory-fabricated rigid PVC interlocking spacers, sized for type and sizes of ducts with which used, and selected to provide minimum duct spacings indicated while supporting ducts during concreting or backfilling.
2. Warning Tape: Underground-line warning tape specified in Division 26 Section "Identification for Electrical Systems".

2.3 HANDHOLES AND BOXES

A. Description: Comply with SCTE 77.
1. Color: Gray.
2. Configuration: Units shall be designed for flush burial and have closed bottom, unless otherwise indicated.
3. Cover: Weatherproof, secured by tamper-resistant locking devices and having structural load rating consistent with enclosure.
   - in Pavement (in traffic): to meet or exceed AASHTO HS20-44.
   - in Pavement (incidental traffic): to meet AASHTO HS20-44.
4. Cover Finish: Nonskid finish shall have a minimum coefficient of friction of 0.50.
5. Cover Legend: Molded lettering, "ELECTRIC". "COMMS". As indicated for each service.
6. Duct Entrance Provisions: Duct-terminating fittings shall mate with entering ducts for secure, fixed installation in enclosure wall.
7. Handholes 12 inches wide by 24 inches long and larger shall have inserts for cable racks and pulling-in irons installed before concrete is poured.

B. Fiberglass Handholes and Boxes with Polymer Concrete Frame and Cover: Sheet-molded, fiberglass-reinforced, polyester resin enclosure joined to polymer concrete top ring or frame.
1. Available Manufacturers: Subject to compliance with requirements, manufacturers offering products that may be incorporated into the Work include, but are not limited to, the following:
2. Manufacturers: Subject to compliance with requirements, provide products by one of the following:
   a. Armorcast Products Company.
   b. Carson Industries LLC.
   c. Christy Concrete Products.
   d. Synertech Moulded Products, Inc.; a division of Oldcastle Precast.

C. Fiberglass Handholes and Boxes: Molded of fiberglass-reinforced polyester resin, with covers of fiberglass.
   1. Available Manufacturers: Subject to compliance with requirements, manufacturers offering products that may be incorporated into the Work include, but are not limited to, the following:
      a. Carson Industries LLC.
      b. Christy Concrete Products.
      c. Nordic Fiberglass, Inc.

2.4 PRECAST MANHOLES

A. Available Manufacturers: Subject to compliance with requirements, manufacturers offering products that may be incorporated into the Work include, but are not limited to, the following:
   1. Carder Concrete Products.
   2. Christy Concrete Products.
   3. Elmhurst-Chicago Stone Co.
   4. Oldcastle Precast Group.
   5. Riverton Concrete Products; a division of Cretex Companies, Inc.
   6. Utility Concrete Products, LLC.
   7. Utility Vault Co.
   8. Wausau Tile, Inc.

B. Comply with ASTM C858 and with interlocking mating sections, complete with accessories, hardware, and features.
   1. Windows: Precast openings in walls, arranged to match dimensions and elevations of approaching ducts and duct banks plus an additional 12 inches vertically and horizontally to accommodate alignment variations.
      a. Windows shall be located no less than 6 inches from interior surfaces of walls, floors, or roofs of manholes, but close enough to corners to facilitate racking of cables on walls.
      b. Window opening shall have cast-in-place, welded wire fabric reinforcement for field cutting and bending to tie in to concrete envelopes of duct banks.
      c. Window openings shall be framed with at least two additional No. 4 steel reinforcing bars in concrete around each opening.

C. Concrete Knockout Panels: 1 and 1/2 to 2 inches thick, for future conduit entrance and sleeve for ground rod.

D. Joint Sealant: Asphaltic-butyl material with adhesion, cohesion, flexibility, and durability properties necessary to withstand maximum hydrostatic pressures at the installation location with the ground-water level at grade.

2.5 UTILITY STRUCTURE ACCESSORIES

A. Available Manufacturers: Subject to compliance with requirements, manufacturers offering products that may be incorporated into the Work include, but are not limited to, the following:
   1. Bilco Company (The).
   2. Campbell Foundry Company.
   3. Carder Concrete Products.
   4. Christy Concrete Products.
   5. East Jordan Iron Works, Inc.
   6. Elmhurst-Chicago Stone Co.
   7. McKinley Iron Works, Inc.
   8. Neenah Foundry Company.
   9. NewBasis.
   10. Oldcastle Precast Group.
   11. Osburn Associates, Inc.
   12. Pennsylvania Insert Corporation.
   13. Riverton Concrete Products; a division of Cretex Companies, Inc.
   14. Strongwell Corporation; Lenoir City Division.
   15. Underground Devices, Inc.
   16. Utility Concrete Products, LLC.
   17. Utility Vault Co.
   18. Wausau Tile, Inc.

B. Manhole Frames, Covers, and Chimney Components: Comply with structural design loading specified for manhole.
   1. Frame and Cover: Weatherproof, gray cast iron complying with ASTM A48/A48M, Class 30B with milled cover-to-frame bearing surfaces; diameter, 26 inches.
      a. Cover Finish: Nonskid finish shall have a minimum coefficient of friction of 0.50.
      b. Special Covers: Recess in face of cover designed to accept finish material in paved areas.
   2. Cover Legend: Cast in. Selected to suit system.
      a. Legend: “ELECTRIC-LV” for duct systems with power wires and cables for systems operating at 600 V and less.
      b. Legend: “ELECTRIC-HV” for duct systems with medium-voltage cables.
      c. Legend: “SIGNAL” for communications, data, and telephone duct systems.
   3. Manhole Chimney Components: Precast concrete rings with dimensions matched to those of roof opening.
      a. Mortar for Chimney Ring and Frame and Cover Joints: Comply with ASTM C 270, Type M, except for quantities less than 2.0 cu. ft. where packaged mix complying with ASTM C 387, Type M, may be used.

C. Manhole Sump: Depression cast in floor.

D. Pulling Eyes in Concrete Walls: Eyebolt with reinforcing-bar fastening insert, 2 inch diameter eye, and 1 by 4 inch bolt.
   1. Working Load Embedded in 6 Inch, 4,000 psi Concrete: 13,000 lbf minimum tension.

E. Pulling Eyes in Nonconcrete Walls: Eyebolt with reinforced fastening, 1 and 1/4 inch diameter eye, rated 2,500 lbf minimum tension.

F. Pulling-In and Lifting Irons in Concrete Floors: 7/8 inch diameter, hot-dip galvanized, bent steel rod; stress relieved after forming; and fastened to reinforcing rod. Exposed triangular opening.
   1. Ultimate Yield Strength: 40,000 lbf shear and 60,000 lbf tension.

G. Bolting Inserts for Concrete Utility Structure Cable Racks and Other Attachments: Flared, threaded inserts of noncorrosive, chemical-resistant, nonconductive thermoplastic material; 1/2 inch ID by 2 and 3/4 inches deep, flared to 1 and 1/4 inches minimum at base.
   1. Tested Ultimate Pullout Strength: 12,000 lbf minimum.

H. Expansion Anchors for Installation after Concrete Is Cast: Zinc-plated, carbon-steel-wedge type with stainless-steel expander clip with 1/2 inch bolt, 5,300 lbf rated pullout strength, and minimum 6,800 lbf rated shear strength.

I. Cable Rack Assembly: Steel, hot-dip galvanized, except insulators.

   1. Stanchions: T-section or channel; 2 and 1/4 inch nominal size; punched with 14 holes on 1 and 1/2 inch centers for cable-arm attachment.
   2. Arms: 1 and 1/2 inches wide, lengths ranging from 3 inches with 450 lb minimum capacity to 18 inches with 250 lb minimum capacity. Arms shall have slots along full length for cable ties and be arranged for secure mounting in horizontal position at any vertical location on stanchions.
   3. Insulators: High-glaze, wet-process porcelain arranged for mounting on cable arms.

J. Duct-Sealing Compound: Nonhardening, safe for contact with human skin, not deleterious to cable insulation, and workable at temperatures as low as 35 deg F. Capable of withstanding temperature of 300 deg F without slump and adhering to clean surfaces of plastic ducts, metallic conduits, conduit coatings, concrete, masonry, lead, cable sheaths, cable jackets, insulation materials, and common metals.

K. Fixed Manhole Ladders: Arranged for attachment to or wall and floor of manhole. Ladder and mounting brackets and braces shall be fabricated from hot-dip galvanized steel.

L. Cover Hooks: Heavy duty, designed for lifts 60 lbf and greater. Two required.

PART 3 - EXECUTION

3.1 EARTHWORK

A. Excavation and Backfill: Do not use heavy-duty, hydraulic-operated, compaction equipment.

B. Restore surface features at areas disturbed by excavation and reestablish original grades, unless otherwise indicated. Replace removed sod immediately after backfilling is completed.

C. Restore areas disturbed by trenching, storing of dirt, cable laying, and other work. Restore vegetation and include necessary topsoiling, fertilizing, liming, seeding, sodding, sprigging, and mulching.

D. Cut and patch existing pavement in the path of underground ducts and utility structures.

3.2 DUCT INSTALLATION

A. Slope: Pitch ducts a minimum slope of 1:300 down toward manholes and handholes and away from buildings and equipment. Slope ducts from a high point in runs between two manholes to drain in both directions.

B. Curves and Bends: Use 5 degree angle couplings for small changes in direction. Use manufactured long sweep bends with a minimum radius of 48 inches, both horizontally and vertically, at other locations, unless otherwise indicated.

C. Joints: Use solvent-cemented joints in ducts and fittings and make watertight according to manufacturer's written instructions. Stagger couplings so those of adjacent ducts do not lie in same plane.

D. Duct Entrances to Manholes and Concrete and Polymer Concrete Handholes: Use end bells, spaced approximately 10 inches o.c. for 5 inch ducts, and vary proportionately for other duct sizes.
   1. Begin change from regular spacing to end-bell spacing 10 feet from the end bell without reducing duct line slope and without forming a trap in the line.
   2. Direct-Buried Duct Banks: Install an expansion and deflection fitting in each conduit in the area of disturbed earth adjacent to manhole or handhole.
   3. Grout end bells into structure walls from both sides to provide watertight entrances.

E. Building Wall Penetrations: Make a transition from underground duct to rigid steel conduit at least 10 feet outside the building wall without reducing duct line slope away from the building, and without forming a trap in the line. Use fittings manufactured for duct-to-conduit transition. Install conduit penetrations of building walls as specified in Division 26 Section 0500.

F. Sealing: Provide temporary closure at terminations of ducts that have cables pulled. Seal spare ducts at terminations. Use sealing compound and plugs to withstand at least 15 psig hydrostatic pressure.

G. Pulling Cord: Install 200 lbf test nylon cord in ducts, including spares.

H. Concrete-Encased Ducts: Support ducts on duct separators.
1. Separator Installation: Space separators close enough to prevent sagging and deforming of ducts, with not less than 4 spacers per 20 feet of duct. Secure separators to earth and to ducts to prevent floating during concreting. Stagger separators approximately 6 inches between tiers. Tie entire assembly together using fabric straps; do not use tie wires or reinforcing steel that may form conductive or magnetic loops around ducts or duct groups.
2. Concreting Sequence: Pour each run of envelope between manholes or other terminations in one continuous operation.
   a. Start at one end and finish at the other, allowing for expansion and contraction of ducts as their temperature changes during and after the pour. Use expansion fittings installed according to manufacturer's written recommendations, or use other specific measures to prevent expansion-contraction damage.
   b. If more than one pour is necessary, terminate each pour in a vertical plane and install 3/4 inch reinforcing rod dowels extending 18 inches into concrete on both sides of joint near corners of envelope.
3. Pouring Concrete: Spade concrete carefully during pours to prevent voids under and between conduits and at exterior surface of envelope. Do not allow a heavy mass of concrete to fall directly onto ducts. Use a plank to direct concrete down sides of bank assembly to trench bottom. Allow concrete to flow to center of bank and rise up in middle, uniformly filling all open spaces. Do not use power-driven agitating equipment unless specifically designed for duct-bank application.
4. Reinforcement: Reinforce concrete-encased duct banks where they cross disturbed earth and where indicated. Arrange reinforcing rods and ties without forming conductive or magnetic loops around ducts or duct groups.
5. Forms: Use walls of trench to form side walls of duct bank where soil is self-supporting and concrete envelope can be poured without soil inclusions; otherwise, use forms.
6. Minimum Space between Ducts: 3 inches between ducts and exterior envelope wall, 2 inches between ducts for like services, and 6 inches between power and signal ducts.
7. Depth: Install top of duct bank at least 24 inches below finished grade in areas not subject to deliberate traffic, and at least 36 inches below finished grade in deliberate traffic paths for vehicles, unless otherwise indicated.
8. Stub-Ups: Use manufactured duct elbows for stub-ups at poles and equipment and at building entrances through the floor, unless otherwise indicated. Extend concrete encasement throughout the length of the elbow.
9. Stub-Ups: Use manufactured rigid steel conduit elbows for stub-ups at poles and equipment and at building entrances through the floor.

a. Couple steel conduits to ducts with adapters designed for this purpose, and encase coupling with 3 inches of concrete.
b. Stub-Ups to Equipment: For equipment mounted on outdoor concrete bases, extend steel conduit horizontally a minimum of 60 inches from edge of base. Install insulated grounding bushings on terminations at equipment.

10. Warning Tape: For landscaped areas bury warning tape approximately 12 inches below grade above all concrete-encased ducts and duct banks. Under asphalt bury warning tape approximately 6 inches below grade above all concrete-encased ducts and duct banks. Align tape parallel to and within 3 inches of the centerline of duct bank. Provide an additional warning tape for each 12 inch increment of duct-bank width over a nominal 18 inches. Space additional tapes 12 inches apart, horizontally.

I. Direct-Buried Duct Banks:
1. Support ducts on duct separators coordinated with duct size, duct spacing, and outdoor temperature.
2. Space separators close enough to prevent sagging and deforming of ducts, with not less than 4 spacers per 20 feet of duct. Secure separators to earth and to ducts to prevent displacement during backfill and yet permit linear duct movement due to expansion and contraction as temperature changes. Stagger spacers approximately 6 inches between tiers.
3. Excavate trench bottom to provide firm and uniform support for duct bank. Prepare trench bottoms for pipes less than 6 inches in nominal diameter.
4. Install backfill.
5. After installing first tier of ducts, backfill and compact. Start at tie-in point and work toward end of duct run, leaving ducts at end of run free to move with expansion and contraction as temperature changes during this process. Repeat procedure after placing each tier. After placing last tier, hand-place backfill to 6 inches over ducts and hand tamp. Firmly tamp backfill around ducts to provide maximum supporting strength. Use hand tamper only. After placing controlled backfill over final tier, make final duct connections at end of run and complete backfilling with normal compaction.
6. Install ducts with a minimum of 2 inches between ducts for like services and 6 inches between power and signal ducts.
7. Depth: Install top of duct bank at least 36 inches below finished grade, unless otherwise indicated.
8. Set elevation of bottom of duct bank below the frost line.
9. Install manufactured duct elbows for stub-ups at poles and equipment and at building entrances through the floor, unless otherwise indicated. Encase elbows for stub-up ducts throughout the length of the elbow.
10. Install manufactured rigid steel conduit elbows for stub-ups at poles and equipment and at building entrances through the floor.
    a. Couple steel conduits to ducts with adapters designed for this purpose, and encase coupling with 3 inches of concrete.
    b. For equipment mounted on outdoor concrete bases, extend steel conduit horizontally a minimum of 60 inches from edge of equipment pad or

foundation. Install insulated grounding bushings on terminations at equipment.

11. Warning Tape: For landscaped areas bury warning tape approximately 12 inches below grade above all concrete-encased ducts and duct banks. Under asphalt bury warning tape approximately 6 inches below grade above all concrete-encased ducts and duct banks. Align tape parallel to and within 3 inches of the centerline of duct bank. Provide an additional warning tape for each 12 inch increment of duct-bank width over a nominal 18 inches. Space additional tapes 12 inches apart, horizontally.

3.3 INSTALLATION OF CONCRETE MANHOLES

A. Comply with ASTM C 891, unless otherwise indicated.

B. Install units level and plumb and with orientation and depth coordinated with connecting ducts to minimize bends and deflections required for proper entrances.

C. Unless otherwise indicated, support units on a level bed of crushed stone or gravel, graded from 1 inch sieve to No. 4 sieve and compacted to same density as adjacent undisturbed earth.

D. Manhole Roof: Install with rooftop at least 15 inches below finished grade.

E. Manhole Frame: In paved areas and traffic-ways, set frames flush with finished grade. Set other manhole frames 1 inch above finished grade.

F. Manholes with Fixed Ladders: Offset access opening from manhole centerlines to align with ladder.

G. Install chimney, constructed of precast concrete collars and rings to support frame and cover and to connect cover with manhole roof opening. Provide moisture-tight masonry joints and waterproof grouting for cast-iron frame to chimney.

H. Hardware: Install removable hardware, including pulling eyes, cable stanchions, cable arms, and insulators, as required for installation and support of cables and conductors and as indicated.

I. Fixed Manhole Ladders: Arrange to provide for safe entry with maximum clearance from cables and other items in manholes.

J. Field-Installed Bolting Anchors: Do not drill deeper than 3 and 7/8 inches for anchor bolts installed in the field. Use a minimum of two anchors for each cable stanchion.

K. Warning Sign: Install “Confined Space Hazard” warning sign on the inside surface of each manhole cover.

3.4 INSTALLATION OF HANDHOLES AND BOXES OTHER THAN PRECAST CONCRETE

A. Install handholes and boxes level and plumb and with orientation and depth coordinated with connecting ducts to minimize bends and deflections required for proper entrances. Use box extension if required to match depths of ducts, and seal joint between box and extension as recommended by the manufacturer.

B. Unless otherwise indicated, support units on a level bed of crushed stone or gravel, graded from 1/2 inch sieve to No. 4 sieve and compacted to 95% density.

C. Elevation: In paved areas and traffic-ways, set so cover surface will be flush with finished grade. Set covers of other handholes 1 inch above finished grade.

D. Install handholes and boxes with bottom below the frost line, below grade.

E. Install removable hardware, including pulling eyes, cable stanchions, cable arms, and insulators, as required for installation and support of cables and conductors and as indicated. Select arm lengths to be long enough to provide spare space for future cables, but short enough to preserve adequate working clearances in the enclosure.

F. Field-cut openings for ducts and conduits according to enclosure manufacturer's written instructions. Cut wall of enclosure with a tool designed for material to be cut. Size holes for terminating fittings to be used, and seal around penetrations after fittings are installed.

3.5 GROUNDING

A. Ground underground ducts and utility structures according to Division 26 Section 0526.

3.6 CLEANING

A. Pull leather-washer-type duct cleaner, with graduated washer sizes, through full length of ducts. Follow with rubber duct swab for final cleaning and to assist in spreading lubricant throughout ducts.

B. Clean internal surfaces of manholes, including sump. Remove foreign material.

END OF SECTION 26 0543

SECTION 26 0553 - IDENTIFICATION FOR ELECTRICAL SYSTEMS

PART 1 - GENERAL

1.1 SUMMARY

A. This Section includes the following:
   1. Identification for conductors and communication and control cable.
   2. Warning labels and signs.
   3. Equipment identification labels.

1.2 QUALITY ASSURANCE

A. Comply with ANSI A13.1.

1.3 COORDINATION

A. Coordinate identification names, abbreviations, colors, and other features with requirements in the Contract Documents, manufacturer's wiring diagrams, and the Operation and Maintenance Manual, and with those required by codes, standards, and 29 CFR 1910.145. Use consistent designations throughout Project.

PART 2 - PRODUCTS

2.1 CONDUCTOR AND COMMUNICATION- AND CONTROL-CABLE IDENTIFICATION MATERIALS

A. Marker Tape: Vinyl or vinyl -cloth, self-adhesive wraparound type, black lettering on a white background with circuit identification legend machine printed by thermal transfer or equivalent process. Nomenclature must be consistent with the conduit schedule and RPM site electrical schematic markings.

2.2 WARNING LABELS AND SIGNS

A. Comply with NFPA 70 and 29 CFR 1910.145.

B. Self-Adhesive Warning Labels: Factory printed, multicolor, pressure-sensitive adhesive labels, configured for display on front cover, door, or other access to equipment, unless otherwise indicated.

C. Baked-Enamel Warning Signs: Preprinted aluminum signs, punched or drilled for fasteners, with colors, legend, and size required for application. 1/4 inch grommets in corners for mounting. Nominal size, 7 by 10 inches.

D. Metal-Backed, Butyrate Warning Signs: Weather-resistant, nonfading, preprinted, cellulose-acetate butyrate signs with 0.0396 inch galvanized-steel backing; and with colors, legend, and size required for application. 1/4 inch grommets in corners for mounting. Nominal size, 10 by 14 inches.

E. Fasteners for Signs: Self-tapping, stainless-steel screws or stainless-steel machine screws with nuts and flat and lock washers.

F. Warning label and sign shall include, but are not limited to, the following legends:
   1. Multiple Power Source Warning: "DANGER - ELECTRICAL SHOCK HAZARD - EQUIPMENT HAS MULTIPLE POWER SOURCES".
   2. Workspace Clearance Warning: "WARNING - OSHA REGULATION - AREA IN FRONT OF ELECTRICAL EQUIPMENT MUST BE KEPT CLEAR FOR 36 INCHES".

2.3 EQUIPMENT IDENTIFICATION LABELS

A. Adhesive Film Label with Clear Protective Overlay: Machine printed, in black, by thermal transfer or equivalent process. Minimum letter height shall be 3/8 inch. Overlay shall provide a weatherproof and ultraviolet-resistant seal for label.

B. Self-Adhesive, Engraved, Laminated Acrylic or Melamine Label: Adhesive backed, with white letters on a dark-gray background. Minimum letter height shall be 3/8 inch.

PART 3 - EXECUTION

3.1 APPLICATION

A. Auxiliary Electrical Systems Conductor and Cable Identification: Use marker tape to identify field-installed alarm, control, signal, sound, intercommunications, voice, and data wiring connections.
   1. Identify conductors, cables, and terminals in enclosures and at junctions, terminals, and cable pull points. Identify by system and circuit designation.
   2. Use system of designations that is uniform and consistent with the conduit schedule and RPM site electrical schematic markings.

B. Warning Labels for Indoor Cabinets, Boxes, and Enclosures for Power and Lighting: Comply with 29 CFR 1910.145 and apply baked-enamel warning signs. Identify system voltage with black letters on an orange background. Apply to exterior of door, cover, or other access.

1. Equipment with Multiple Power or Control Sources: Apply to door or cover of equipment including, but not limited to, the following:
   a. Power transfer switches.
   b. Controls with external control power connections.
2. Equipment Requiring Workspace Clearance According to NFPA 70: Unless otherwise indicated, apply to door or cover of equipment but not on flush panelboards and similar equipment in finished spaces.

C. Equipment Identification Labels: On each unit of equipment, install unique designation label that is consistent with wiring diagrams, schedules, and Operation and Maintenance Manual. Apply labels to disconnect switches and protection equipment, central or master units, control panels, control stations, terminal cabinets, and racks of each system. Systems include power, lighting, control, communication, signal, monitoring, and alarm systems unless equipment is provided with its own identification.
1. Labeling Instructions:
   a. Indoor Equipment: Self-adhesive, engraved, laminated acrylic or melamine label. Unless otherwise indicated, provide a single line of text with 1/2 inch high letters on 1 and 1/2 inch high label; where 2 lines of text are required, use labels 2 inches high.
   b. Outdoor Equipment: Engraved, laminated acrylic or melamine label, drilled for screw attachment.
   c. Elevated Components: Increase sizes of labels and legend to those appropriate for viewing from the floor.
2. Equipment to Be Labeled:
   a. Panelboards, electrical cabinets, and enclosures.
   b. Electrical switchgear and switchboards.
   c. Transformers.
   d. Motor-control centers.
   e. Disconnect switches.
   f. Enclosed circuit breakers.
   g. Motor starters.
   h. Push-button stations.
   i. Power transfer equipment.
   j. Contactors.

3.2 INSTALLATION

A. Verify identity of each item before installing identification products.

B. Location: Install identification materials and devices at locations for most convenient viewing without interference with operation and maintenance of equipment.

C. Apply identification devices to surfaces that require finish after completing finish work.

D. Self-Adhesive Identification Products: Clean surfaces before application, using materials and methods recommended by manufacturer of identification device.

E. Attach nonadhesive signs and plastic labels with screws and auxiliary hardware appropriate to the location and substrate.

F. Color-Coding for Phase and Voltage Level Identification, 600 V and Less: Use the colors listed below for ungrounded service, feeder, and branch-circuit conductors.
   1. Color shall be factory applied.
   2. Colors for 208/120-V Circuits:
      a. Phase A: Black.
      b. Phase B: Red.
      c. Phase C: Blue.
   3. Colors for 480/277-V Circuits:
      a. Phase A: Brown.
      b. Phase B: Orange.
      c. Phase C: Yellow.

END OF SECTION 26 0553

SECTION 26 0923 - LIGHTING CONTROL DEVICES

PART 1 - GENERAL

1.1 SUMMARY

A. This Section includes the following lighting control devices:
   1. Time switches.
   2. Outdoor photoelectric switches.
   3. Outdoor motion sensors.
   4. Lighting contactors.

1.2 RELATED DOCUMENTS

A. See Division 26 Section 2726 for wall-box dimmers, wall-switch occupancy sensors, and manual light switches.

1.3 QUALITY ASSURANCE

A. Electrical Components, Devices, and Accessories: Listed and labeled as defined in NFPA 70, Article 100, by a testing agency acceptable to authorities having jurisdiction, and marked for intended use.

PART 2 - PRODUCTS

2.1 TIME SWITCHES

A. Available Manufacturers: Subject to compliance with requirements, manufacturers offering products that may be incorporated into the Work include, but are not limited to, the following:

B. Basis-of-Design Product: Subject to compliance with requirements, provide or a comparable product by one of the following:
   1. Area Lighting Research, Inc.; Tyco Electronics.
   2. Grasslin Controls Corporation; a GE Industrial Systems Company.
   3. Intermatic, Inc.
   4. Leviton Mfg. Company Inc.
   5. Lightolier Controls; a Genlyte Company.
   6. Lithonia Lighting; Acuity Lighting Group, Inc.
   7. Paragon Electric Co.; Invensys Climate Controls.
   8. Square D; Schneider Electric.
   9. TORK.

10. Touch-Plate, Inc.
11. Watt Stopper (The).

C. Electronic Time Switches: Electronic, solid-state programmable units with alphanumeric display; complying with UL 917.
1. Contact Configuration: SPST.
2. Contact Rating: 30-A inductive or resistive, 240-V ac.
3. Program: 8 on-off set points on a 24 hour schedule and an annual holiday schedule that overrides the weekly operation on holidays.
4. Circuitry: Allow connection of a photoelectric relay as substitute for on-off function of a program on selected channels.
5. Astronomic Time: All channels.
6. Battery Backup: For schedules and time clock.

D. Electromechanical-Dial Time Switches: Type complying with UL 917.
1. Contact Configuration: SPST.
2. Contact Rating: 30-A inductive or resistive, 240 V ac.
3. Circuitry: Allow connection of a photoelectric relay as substitute for on-off function of a program.
4. Astronomic time dial.
5. Eight-Day Program: Uniquely programmable for each weekday and holidays.
6. Skip-a-day mode.
7. Wound-spring reserve carryover mechanism to keep time during power failures, minimum of 16 Insert number hours.

2.2 OUTDOOR PHOTOELECTRIC SWITCHES

A. Available Manufacturers: Subject to compliance with requirements, manufacturers offering products that may be incorporated into the Work include, but are not limited to, the following:

B. Basis-of-Design Product: Subject to compliance with requirements, provide the product indicated on Drawings or a comparable product by one of the following:
1. Area Lighting Research, Inc.; Tyco Electronics.
2. Grasslin Controls Corporation; a GE Industrial Systems Company.
3. Intermatic, Inc.
4. Lithonia Lighting; Acuity Lighting Group, Inc.
5. Novitas, Inc.
6. Paragon Electric Co.; Invensys Climate Controls.
7. Square D; Schneider Electric.
8. TORK.
9. Touch-Plate, Inc.
10. Watt Stopper (The).

C. Description: Solid state, with DPST dry contacts rated for 1,800 VA tungsten or 1,000 VA inductive, to operate connected relay, contactor coils, or microprocessor input; complying with UL 773A.
   1. Light-Level Monitoring Range: 1.5 to 10 fc (16.14 to 108 lx), with an adjustment for turn-on and turn-off levels within that range.
   2. Time Delay: 15 second minimum, to prevent false operation.
   3. Surge Protection: Metal-oxide varistor, complying with IEEE C62.41.1, IEEE C62.41.2, and IEEE 62.45 for Category A1 locations.
   4. Mounting: Twist lock complying with IEEE C136.10, with base-and-stem mounting or stem-and-swivel mounting accessories as required to direct sensor to the north sky exposure.

D. Description: Solid state, with DPST dry contacts rated for 1,800 VA to operate connected load, relay, or contactor coils; complying with UL 773.
   1. Light-Level Monitoring Range: 1.5 to 10 fc (16.14 to 108 lx), with an adjustment for turn-on and turn-off levels within that range.
   2. Time Delay: 30 second minimum, to prevent false operation.
   3. Lightning Arrester: Air-gap type.
   4. Mounting: Twist lock complying with IEEE C136.10, with base.

2.3 OUTDOOR MOTION SENSORS (PIR)

A. Available Manufacturers: Subject to compliance with requirements, manufacturers offering products that may be incorporated into the Work include, but are not limited to, the following:

B. Basis-of-Design Product: Subject to compliance with requirements, provide or a comparable product by one of the following:
   1. Bryant Electric; a Hubbell Company.
   2. Hubbell Lighting.
   3. Lithonia Lighting; Acuity Lighting Group, Inc.
   4. Paragon Electric Co.; Invensys Climate Controls.
   5. RAB Lighting, Inc.
   6. TORK.
   7. Watt Stopper (The).

C. Performance Requirements: Suitable for operation in ambient temperatures ranging from minus 40 to plus 130 deg F (minus 40 to plus 54 deg C), rated as raintight according to UL 773A.
   1. Operation: Turn lights on when sensing infrared energy changes between background and moving body in area of coverage; with a time delay for turning lights off, adjustable over a minimum range of 1 to 15 minutes.
   2. Mounting:
      a. Sensor: Suitable for mounting in any position on a standard outdoor junction box.
      b. Relay: Internally mounted in a standard weatherproof electrical enclosure.

c. Time-Delay and Sensitivity Adjustments: Recessed and concealed behind hinged door.

3. Bypass Switch: Override the on function in case of sensor failure.
4. Automatic Light-Level Sensor: Adjustable from 1 to 20 fc (11 to 215 lx); keep lighting off during daylight hours.

D. Detector Sensitivity: Detect occurrences of 6 inch minimum movement of any portion of a human body that presents a target of not less than 36 sq. in.

E. Detection Coverage: Up to 35 feet, with a field of view of 90 degrees.

F. Lighting Fixture Mounted Sensor: Suitable for switching 300 W of tungsten load at 120 or 277-V ac.

G. Individually Mounted Sensor: Contacts rated to operate the connected relay, complying with UL 773A. Sensor shall be powered from the relay unit.
1. Relay Unit: Dry contacts rated for 20-A ballast load at 120 and 277-V ac, for 13-A tungsten at 120-V ac, and for 1 hp at 120-V ac. Power supply to sensor shall be 24-V dc, 150-mA, Class 2 power source as defined by NFPA 70.
2. Indicator: LED, to show when motion is being detected during testing and normal operation of the sensor.

2.4 LIGHTING CONTACTORS

A. Available Manufacturers: Subject to compliance with requirements, manufacturers offering products that may be incorporated into the Work include, but are not limited to, the following:

B. Basis-of-Design Product: Subject to compliance with requirements, provide or a comparable product by one of the following:
1. Allen-Bradley/Rockwell Automation.
2. ASCO Power Technologies, LP; a division of Emerson Electric Co.
3. Eaton Electrical Inc.; Cutler-Hammer Products.
4. GE Industrial Systems; Total Lighting Control.
5. Grasslin Controls Corporation; a GE Industrial Systems Company.
6. Hubbell Lighting.
7. Lithonia Lighting; Acuity Lighting Group, Inc.
8. MicroLite Lighting Control Systems.
9. Square D; Schneider Electric.
10. TORK.
11. Touch-Plate, Inc.
12. Watt Stopper (The).

C. Description: Electrically operated and mechanically held, combination type with nonfused disconnect, complying with NEMA ICS 2 and UL 508.

1. Current Rating for Switching: Listing or rating consistent with type of load served, including tungsten filament, inductive, and high-inrush ballast (ballast with 15 percent or less total harmonic distortion of normal load current).
2. Fault Current Withstand Rating: Equal to or exceeding the available fault current at the point of installation.
3. Enclosure: Comply with NEMA 250.
4. Provide with control and pilot devices as indicated on Drawings, matching the NEMA type specified for the enclosure.

2.5 CONDUCTORS AND CABLES

A. Power Wiring to Supply Side of Remote-Control Power Sources: Not smaller than No. 12 AWG. Comply with requirements in Division 26 Section 0519.

B. Classes 2 and 3 Control Cable: Multiconductor cable with stranded-copper conductors not smaller than No. 18 AWG. Comply with requirements in Division 26 Section 0519.

C. Class 1 Control Cable: Multiconductor cable with stranded-copper conductors not smaller than No. 14 AWG. Comply with requirements in Division 26 Section 0519.

PART 3 - EXECUTION

3.1 SENSOR INSTALLATION

A. Install and aim sensors in locations to achieve not less than 90 percent coverage of areas indicated. Do not exceed coverage limits specified in manufacturer's written instructions.

B. When requested within 12 months of date of Substantial Completion, provide on-site assistance in adjusting sensors to suit actual occupied conditions. Provide up to two visits to Project during other than normal occupancy hours for this purpose.

3.2 CONTACTOR INSTALLATION

A. Mount electrically held lighting contactors with elastomeric isolator pads, to eliminate structure-borne vibration, unless contactors are installed in an enclosure with factory-installed vibration isolators.

3.3 WIRING INSTALLATION

A. Wiring Method: Comply with Division 26 Section 0519. Minimum conduit size shall be 3/4inch.

B. Wiring within Enclosures: Comply with NECA 1. Separate power-limited and nonpower-limited conductors according to conductor manufacturer's written instructions.

C. Size conductors according to lighting control device manufacturer's written instructions, unless otherwise indicated.

D. Splices, Taps, and Terminations: Make connections only on numbered terminal strips in junction, pull, and outlet boxes; terminal cabinets; and equipment enclosures.

3.4 IDENTIFICATION

A. Identify components and power and control wiring according to Division 26 Section 0553.
   1. Identify controlled circuits in lighting contactors.
   2. Identify circuits or luminaries controlled by photoelectric and occupancy sensors at each sensor.

B. Label time switches and contactors with a unique designation.

END OF SECTION 26 0923

SECTION 26 2200 - LOW-VOLTAGE TRANSFORMERS

PART 1 - GENERAL

1.1 SUMMARY

A. This Section includes the following types of dry-type transformers rated 600 V and less, with capacities up to 1000 kVA:
   1. Distribution transformers.
   2. Buck-boost transformers.

1.2 QUALITY ASSURANCE

A. Electrical Components, Devices, and Accessories: Listed and labeled as defined in NFPA 70, Article 100, by a testing agency acceptable to authorities having jurisdiction, and marked for intended use.

PART 2 - PRODUCTS

2.1 MANUFACTURERS

A. Available Manufacturers: Subject to compliance with requirements, manufacturers offering products that may be incorporated into the Work include, but are not limited to, the following:
   1. ACME Electric Corporation; Power Distribution Products Division.
   2. Challenger Electrical Equipment Corp.; a division of Eaton Corp.
   3. Controlled Power Company.
   4. Eaton Electrical Inc.; Cutler-Hammer Products.
   5. Federal Pacific Transformer Company; Division of Electro-Mechanical Corp.
   6. General Electric Company.
   7. Hammond Co.; Matra Electric, Inc.
   8. Magnetek Power Electronics Group.
   9. Micron Industries Corp.
   10. Myers Power Products, Inc.
   11. Siemens Energy & Automation, Inc.
   12. Sola/Hevi-Duty.
   13. Square D; Schneider Electric.

2.2 GENERAL TRANSFORMER REQUIREMENTS

A. Description: Factory-assembled and tested, air-cooled units for 60-Hz service.

B. Cores: Grain-oriented, non-aging silicon steel.

C. Coils: Continuous windings without splices except for taps.
   1. Internal Coil Connections: Brazed or pressure type.
   2. Coil Material: Copper.

2.3 DISTRIBUTION TRANSFORMERS

A. Comply with NEMA ST 20, and list and label as complying with UL 1561.

B. Cores: One leg per phase.

C. Enclosure: Ventilated, NEMA 250, Type 4X.
   1. Core and coil shall be encapsulated within resin compound, sealing out moisture and air.

D. Transformer Enclosure Finish: Comply with NEMA 250.
   1. Finish Color: ANSI 49 gray.

E. Taps for Transformers 25 kVA and Larger: Two 2.5 percent taps above and two 2.5 percent taps below normal full capacity.

F. Insulation Class: 220 deg C, UL component-recognized insulation system with a maximum of 80 deg C rise above 40 deg C ambient temperature.

G. Energy Efficiency for Transformers Rated 15 kVA and Larger:
   1. Complying with NEMA TP 1, Class 1 efficiency levels.
   2. Tested according to NEMA TP 2.

H. K-Factor Rating: Transformers indicated to be K-factor rated shall comply with UL 1561 requirements for nonsinusoidal load current-handling capability to the degree defined by designated K-factor.
   1. Unit shall not overheat when carrying full-load current with harmonic distortion corresponding to designated K-factor.
   2. Indicate value of K-factor on transformer nameplate.

I. Electrostatic Shielding: Each winding shall have an independent, single, full-width copper electrostatic shield arranged to minimize interwinding capacitance.

J. Wall Brackets: Manufacturer's standard brackets.

2.4 IDENTIFICATION DEVICES

A. Nameplates: Engraved, laminated-plastic or metal nameplate. Nameplates are specified in Division 26 Section 0553.

PART 3 - EXECUTION

3.1 INSTALLATION

A. Construct concrete bases and anchor floor-mounting transformers according to manufacturer's written instructions, seismic codes applicable to Project, and requirements in Division 26 Section 0529.

3.2 ADJUSTING

A. Adjust transformer taps to provide optimum voltage conditions at secondary terminals. Optimum is defined as not exceeding nameplate voltage plus 10 percent and not being lower than nameplate voltage minus 3 percent at maximum load conditions. Submit recording and tap settings as test results.

B. Connect buck-boost transformers to provide nameplate voltage of equipment being served, plus or minus 5 percent, at secondary terminals.

C. Output Settings Report: Prepare a written report recording output voltage and tap settings.

END OF SECTION 26 2200

SECTION 26 2416 - PANELBOARDS

PART 1 - GENERAL

1.1 SUMMARY

A. Section includes distribution panelboards and lighting and appliance branch-circuit panelboards.

1.2 SUBMITTALS

A. Panelboard schedules for installation in panelboards.

1.3 QUALITY ASSURANCE

A. Electrical Components, Devices, and Accessories: Listed and labeled as defined in NFPA 70, by a qualified testing agency, and marked for intended location and application.

B. Comply with NEMA PB 1.

C. Comply with NFPA 70.

1.4 WARRANTY

A. Special Warranty: Manufacturer's standard form in which manufacturer agrees to repair or replace transient voltage suppression devices that fail in materials or workmanship within specified warranty period.
   1. Warranty Period: Five years from date of Substantial Completion.

PART 2 - PRODUCTS

2.1 GENERAL REQUIREMENTS FOR PANELBOARDS

A. Enclosures: Flush- and surface-mounted cabinets.
   1. Rated for environmental conditions at installed location.
      a. Indoor Dry and Clean Locations: NEMA 250, Type 1.
      b. Outdoor Locations: NEMA 250, Type 4X.
      c. Other Wet or Damp Indoor Locations: NEMA 250, Type 4X.
   2. Front: Secured to box with concealed trim clamps. For surface-mounted fronts, match box dimensions; for flush-mounted fronts, overlap box.

3. Hinged Front Cover: Entire front trim hinged to box and with standard door within hinged trim cover.
4. Directory Card: Inside panelboard door, mounted in transparent card holder.

B. Incoming Mains Location: Top and bottom.

C. Phase, Neutral, and Ground Buses: Hard-drawn copper, 98 percent conductivity.

D. Conductor Connectors: Suitable for use with conductor material and sizes.
1. Material: Hard-drawn copper, 98 percent conductivity.
2. Main and Neutral Lugs: Compression type.
3. Ground Lugs and Bus Configured Terminators: Compression type.
4. Feed-Through Lugs: Compression type, suitable for use with conductor material. Locate at opposite end of bus from incoming lugs or main device.
5. Subfeed (Double) Lugs: Compression type suitable for use with conductor material. Locate at same end of bus as incoming lugs or main device.

E. Service Equipment Label: NRTL labeled for use as service equipment for panelboards with one or more main service disconnecting and overcurrent protective devices.

F. Future Devices: Mounting brackets, bus connections, filler plates, and necessary appurtenances required for future installation of devices.

G. Panelboard Short-Circuit Current Rating: Rated for series-connected system with integral or remote upstream overcurrent protective devices and labeled by an NRTL. Include size and type of allowable upstream and branch devices, and listed and labeled for series-connected short-circuit rating by an NRTL.

H. Panelboard Short-Circuit Current Rating: Fully rated to interrupt symmetrical short-circuit current available at terminals.

I. Panelboard Transient Voltage Surge Supressor Device, “TVSS”: All panelboards shall be equipped with a UL 1449 3rd edition listed TVSS. The TVSS may be internal or external to the panel.

2.2 DISTRIBUTION PANELBOARDS

A. Manufacturers: Subject to compliance with requirements:

B. Basis-of-Design Product: Subject to compliance with requirements, provide or comparable product by one of the following:
1. Eaton Electrical Inc.; Cutler-Hammer Business Unit.
2. General Electric Company; GE Consumer & Industrial - Electrical Distribution.
3. Siemens Energy & Automation, Inc.
4. Square D; a brand of Schneider Electric.

C. Panelboards: NEMA PB 1, power and feeder distribution type.

D. Doors: Secured with vault-type latch with tumbler lock; keyed alike.

E. Mains: Circuit breaker Fused switch Lugs only.

F. Branch Overcurrent Protective Devices: For Circuit-Breaker Frame Sizes 125 A and Smaller: Plug-in OR Bolt-on circuit breakers.

G. Branch Overcurrent Protective Devices: For Circuit-Breaker Frame Sizes Larger Than 125 A: Bolt-on circuit breakers; plug-in circuit breakers where individual positive-locking device requires mechanical release for removal.

H. Branch Overcurrent Protective Devices: Fused switches.

2.3 LIGHTING AND APPLIANCE BRANCH-CIRCUIT PANELBOARDS

A. Manufacturers: Subject to compliance with requirements:

B. Basis-of-Design Product: Subject to compliance with requirements, provide or comparable product by one of the following:
   1. Eaton Electrical Inc.; Cutler-Hammer Business Unit.
   2. General Electric Company; GE Consumer & Industrial - Electrical Distribution.
   3. Siemens Energy & Automation, Inc.
   4. Square D; a brand of Schneider Electric.

C. Panelboards: NEMA PB 1, lighting and appliance branch-circuit type.

D. Mains: Circuit breaker or lugs only.

E. Branch Overcurrent Protective Devices: Plug-in OR Bolt-on circuit breakers, replaceable without disturbing adjacent units.

F. Contactors in Main Bus: NEMA ICS 2, Class A, electrically held, general-purpose controller, with same short-circuit interrupting rating as panelboard.
   1. External Control-Power Source: 120-V branch circuit 24-V control circuit.

G. Doors: Concealed hinges; secured with flush latch with tumbler lock; keyed alike.

H. Column-Type Panelboards: Narrow gutter extension, with cover, to overhead junction box equipped with ground and neutral terminal buses.

2.4 DISCONNECTING AND OVERCURRENT PROTECTIVE DEVICES

A. Manufacturers: Subject to compliance with requirements:

B. Basis-of-Design Product: Subject to compliance with requirements, provide or comparable product by one of the following:
   1. Eaton Electrical Inc.; Cutler-Hammer Business Unit.

2. General Electric Company; GE Consumer & Industrial - Electrical Distribution.
3. Siemens Energy & Automation, Inc.
4. Square D; a brand of Schneider Electric.

C. Molded-Case Circuit Breaker (MCCB): Comply with UL 489, with interrupting capacity to meet available fault currents.
1. Thermal-Magnetic Circuit Breakers: Inverse time-current element for low-level overloads, and instantaneous magnetic trip element for short circuits. Adjustable magnetic trip setting for circuit-breaker frame sizes 250 A and larger.
2. Adjustable Instantaneous-Trip Circuit Breakers: Magnetic trip element with front-mounted, field-adjustable trip setting.
3. Electronic trip circuit breakers with rms sensing; field-replaceable rating plug or field-replicable electronic trip; and the following field-adjustable settings:
   a. Instantaneous trip.
   b. Long- and short-time pickup levels.
   c. Long- and short-time time adjustments.
   d. Ground-fault pickup level, time delay, and I^2t response.
4. Current-Limiting Circuit Breakers: Frame sizes 400 A and smaller; let-through ratings less than NEMA FU 1, RK-5.
5. GFCI Circuit Breakers: Single- and two-pole configurations with Class A ground-fault protection (6-mA trip).
6. Ground-Fault Equipment Protection (GFEP) Circuit Breakers: Class B ground-fault protection (30-mA trip).
7. Arc-Fault Circuit Interrupter (AFCI) Circuit Breakers: Comply with UL 1699; 120/240-V, single-pole configuration.
8. Molded-Case Circuit-Breaker (MCCB) Features and Accessories:
   a. Standard frame sizes, trip ratings, and number of poles.
   b. Lugs: Compression style, suitable for number, size, trip ratings, and conductor materials.
   c. Application Listing: Appropriate for application; Type SWD for switching fluorescent lighting loads; Type HID for feeding fluorescent and high-intensity discharge (HID) lighting circuits.
   d. Ground-Fault Protection: Integrally mounted relay and trip unit with adjustable pickup and time-delay settings, push-to-test feature, and ground-fault indicator.
   e. Shunt Trip: 120 OR 24V trip coil energized from separate circuit, set to trip at 75 percent of rated voltage.
   f. Handle Padlocking Device: Fixed attachment, for locking circuit-breaker handles in off position.
   g. Handle Clamp: Loose attachments, for holding circuit-breaker handles in on position.

D. Fused Switch: NEMA KS 1, Type HD; clips to accommodate specified fuses; lockable handle.
1. Fuses, and Spare-Fuse Cabinet: Comply with requirements specified in Division 26 Section “Fuses”.

2.5 ACCESSORY COMPONENTS AND FEATURES

A. Portable Test Set: For testing functions of solid-state trip devices without removing from panelboard. Include relay and meter test plugs suitable for testing panelboard meters and switchboard class relays.

PART 3 - EXECUTION

3.1 INSTALLATION

A. Receive, verify, handle, store and install panelboards and accessories according to NEMA PB 1.1.

B. Mount top of trim 90 inches above finished floor unless otherwise indicated.

C. Mount panelboard cabinet plumb and rigid without distortion of box. Mount recessed panelboards with fronts uniformly flush with wall finish and mating with back box.

D. Install overcurrent protective devices and controllers not already factory installed.
   1. Set field-adjustable, circuit-breaker trip ranges.

E. Install filler plates in unused spaces.

F. Stub four 1 inch empty conduits from panelboard into accessible ceiling space or space designated to be ceiling space in the future. Stub four 1 inch empty conduits into raised floor space or below slab not on grade.

G. Arrange conductors in gutters into groups and bundle and wrap with wire ties.

H. Comply with NECA 1.

3.2 IDENTIFICATION

A. Identify field-installed conductors, interconnecting wiring, and components; provide warning signs complying with Division 26 Section 0553.

B. Create a directory to indicate installed circuit loads and incorporating Owner's final room designations. Obtain approval before installing. Use a computer or typewriter to create directory; handwritten directories are not acceptable.

C. Panelboard Nameplates: Label each panelboard with a nameplate complying with requirements for identification specified in Division 26 Section 0553.

D. Device Nameplates: Label each branch circuit device in distribution panelboards with a nameplate complying with requirements for identification specified in Division 26 Section 0553.

3.3 FIELD QUALITY CONTROL

A. Verifications:
   1. Verify operability: on / off.
   2. Correct malfunctioning units on-site, where possible, and conduct operability verification to demonstrate compliance; otherwise, replace with new units and again conduct operability verification.

B. Panelboards will be considered defective if they do not pass verifications.

END OF SECTION 26 2416

SECTION 26 2726 - WIRING DEVICES

PART 1 - GENERAL

1.1 SUMMARY

A. This Section includes the following:
   1. Receptacles, receptacles with integral GFCI, and associated device plates.
   2. Receptacles with integral surge suppression units.
   3. Isolated-ground receptacles.
   4. Snap switches and wall-box dimmers.
   5. Wall-switch and exterior occupancy sensors.
   6. Communications outlets.
   7. Cord and plug sets.
   8. Multi-outlet assemblies.

1.2 DEFINITIONS

A. EMI: Electromagnetic interference.

B. GFCI: Ground-fault circuit interrupter.

C. Pigtail: Short lead used to connect a device to a branch-circuit conductor.

D. RFI: Radio-frequency interference.

E. TVSS: Transient voltage surge suppressor.

F. UTP: Unshielded twisted pair.

1.3 QUALITY ASSURANCE

A. Source Limitations: Obtain each type of wiring device and associated wall plate through one source from a single manufacturer. Insofar as they are available, obtain all wiring devices and associated wall plates from a single manufacturer and one source.

B. Electrical Components, Devices, and Accessories: Listed and labeled as defined in NFPA 70, Article 100, by a testing agency acceptable to authorities having jurisdiction, and marked for intended use.

C. Comply with NFPA 70.

1.4 COORDINATION

A. Receptacles for Owner-Furnished Equipment: Match plug configurations.
   1. Cord and Plug Sets: Match equipment requirements.

PART 2 - PRODUCTS

2.1 MANUFACTURERS

A. Manufacturers' Names: Shortened versions (shown in parentheses) of the following manufacturers' names are used in other Part 2 articles:
   1. Cooper Wiring Devices; a division of Cooper Industries, Inc. (Cooper).
   2. Hubbell Incorporated; Wiring Device-Kellems (Hubbell).
   3. Leviton Mfg. Company Inc. (Leviton).
   4. Pass & Seymour/Legrand; Wiring Devices & Accessories (Pass & Seymour).

2.2 STRAIGHT BLADE RECEPTACLES

A. Convenience Receptacles, 125 V, 20 A: Comply with NEMA WD 1, NEMA WD 6 configuration 5-20R, and UL 498.
   1. Available Products: Subject to compliance with requirements, products that may be incorporated into the Work include, but are not limited to, the following:
      a. Cooper; 5351 (single), 5352 (duplex).
      b. Hubbell; HBL5351 (single), CR5352 (duplex).
      c. Leviton; 5891 (single), 5352 (duplex).
      d. Pass & Seymour; 5381 (single), 5352 (duplex).

B. Isolated-Ground, Duplex Convenience Receptacles, 125 V, 20 A: Comply with NEMA WD 1, NEMA WD 6 configuration 5-20R, and UL 498.
   1. Available Products: Subject to compliance with requirements, products that may be incorporated into the Work include, but are not limited to, the following:
      a. Hubbell; CR 5253IG.
      b. Leviton; 5362-IG.
      c. Pass & Seymour; IG6300.
   2. Description: Straight blade; equipment grounding contacts shall be connected only to the green grounding screw terminal of the device and with inherent electrical isolation from mounting strap. Isolation shall be integral to receptacle construction and not dependent on removable parts.

C. Tamper-Resistant Convenience Receptacles, 125 V, 20 A: Comply with NEMA WD 1, NEMA WD 6 configuration 5-20R, and UL 498.
   1. Available Products: Subject to compliance with requirements, products that may be incorporated into the Work include, but are not limited to, the following:
      a. Cooper; TR8300.
      b. Hubbell; HBL8300SG.

c. Leviton; 8300-SGG.
d. Pass & Seymour; 63H.

2. Description: Labeled to comply with NFPA 70, “Health Care Facilities”, Article, “Pediatric Locations”, section.

2.3 GFCI RECEPTACLES

A. General Description: Straight blade, feed-through type. Comply with NEMA WD 1, NEMA WD 6, UL 498, and UL 943, Class A, and include indicator light that is lighted when device is tripped.

B. Duplex GFCI Convenience Receptacles, 125 V, 20 A:
1. Available Products: Subject to compliance with requirements, products that may be incorporated into the Work include, but are not limited to, the following:
a. Cooper; GF20.
b. Pass & Seymour; 2084.

2.4 TVSS RECEPTACLES

A. General Description: Comply with NEMA WD 1, NEMA WD 6, UL 498, and UL 1449, with integral TVSS in line to ground, line to neutral, and neutral to ground.
1. TVSS Components: Multiple metal-oxide varistors; with a nominal clamp-level rating of 400 volts and minimum single transient pulse energy dissipation of 240 J, according to IEEE C62.41.2 and IEEE C62.45.
2. Active TVSS Indication: Visual and audible, with light visible in face of device to indicate device is “active” or “no longer in service”.

B. Duplex TVSS Convenience Receptacles:
1. Available Products: Subject to compliance with requirements, products that may be incorporated into the Work include, but are not limited to, the following:
a. Cooper; 5362BLS.
b. Hubbell; HBL5362SA.
c. Leviton; 5380.
2. Description: Straight blade, 125 V, 20 A; NEMA WD 6 configuration 5-20R.

C. Isolated-Ground, Duplex Convenience Receptacles:
1. Available Products: Subject to compliance with requirements, products that may be incorporated into the Work include, but are not limited to, the following:
a. Cooper; IG5362BLS.
b. Hubbell; IG5362SA.
c. Leviton; 5380-IG.
2. Description: Straight blade, 125 V, 20 A; NEMA WD 6 configuration 5-20R. Equipment grounding contacts shall be connected only to the green grounding screw terminal of the device and with inherent electrical isolation from mounting strap. Isolation shall be integral to receptacle construction and not dependent on removable parts.

2.5 TWIST-LOCKING RECEPTACLES

A. Single Convenience Receptacles, 125 V, 20 A: Comply with NEMA WD 1, NEMA WD 6 configuration L5-20R, and UL 498.
   1. Available Products: Subject to compliance with requirements, products that may be incorporated into the Work include, but are not limited to, the following:
      a. Cooper; L520R.
      b. Hubbell; HBL2310.
      c. Leviton; 2310.
      d. Pass & Seymour; L520-R.

B. Isolated-Ground, Single Convenience Receptacles, 125 V, 20 A:
   1. Available Products: Subject to compliance with requirements, products that may be incorporated into the Work include, but are not limited to, the following:
      a. Hubbell; IG2310.
      b. Leviton; 2310-IG.
   2. Description: Comply with NEMA WD 1, NEMA WD 6 configuration L5-20R, and UL 498. Equipment grounding contacts shall be connected only to the green grounding screw terminal of the device and with inherent electrical isolation from mounting strap. Isolation shall be integral to receptacle construction and not dependent on removable parts.

2.6 CORD AND PLUG SETS

A. Description: Match voltage and current ratings and number of conductors to requirements of equipment being connected.
   1. Cord: Rubber-insulated, stranded-copper conductors, with Type SOW-A jacket; with green-insulated grounding conductor and equipment-rating ampacity plus a minimum of 30 percent.
   2. Plug: Nylon body and integral cable-clamping jaws. Match cord and receptacle type for connection.

2.7 SNAP SWITCHES

A. Comply with NEMA WD 1 and UL 20.

B. Switches, 120/277 V, 20 A:
   1. Available Products: Subject to compliance with requirements, products that may be incorporated into the Work include, but are not limited to, the following:
      a. Cooper; 2221 (single pole), 2222 (two pole), 2223 (three way), 2224 (four way).
      b. Hubbell; CS1221 (single pole), CS1222 (two pole), CS1223 (three way), CS1224 (four way).
      c. Leviton; 1221-2 (single pole), 1222-2 (two pole), 1223-2 (three way), 1224-2 (four way).

d. Pass & Seymour; 20AC1 (single pole), 20AC2 (two pole), 20AC3 (three way), 20AC4 (four way).

C. Key-Operated Switches, 120/277 V, 20 A:
1. Available Products: Subject to compliance with requirements, products that may be incorporated into the Work include, but are not limited to, the following:
a. Cooper; 2221L.
b. Hubbell; HBL1221L.
c. Leviton; 1221-2L.
d. Pass & Seymour; PS20AC1-L.
2. Description: Single pole, with factory-supplied key in lieu of switch handle.

D. Single-Pole, Double-Throw, Momentary Contact, Center-Off Switches, 120/277 V, 20 A; for use with mechanically held lighting contactors.
1. Available Products: Subject to compliance with requirements, products that may be incorporated into the Work include, but are not limited to, the following:
a. Cooper; 1995.
b. Hubbell; HBL1557.
c. Leviton; 1257.
d. Pass & Seymour; 1251.

E. Key-Operated, Single-Pole, Double-Throw, Momentary Contact, Center-Off Switches, 120/277 V, 20 A; for use with mechanically held lighting contactors, with factory-supplied key in lieu of switch handle.
1. Available Products: Subject to compliance with requirements, products that may be incorporated into the Work include, but are not limited to, the following:
a. Cooper; 1995L.
b. Hubbell; HBL1557L.
c. Leviton; 1257L.
d. Pass & Seymour; 1251L.

2.8 WALL-BOX DIMMERS

A. Dimmer Switches: Modular, full-wave, solid-state units with integral, quiet on-off switches, with audible frequency and EMI/RFI suppression filters.

B. Control: Continuously adjustable slider or toggle switch; with single-pole or three-way switching. Comply with UL 1472.

C. Incandescent Lamp Dimmers: 120 V; control shall follow square-law dimming curve. On-off switch positions shall bypass dimmer module.
1. 600 W; dimmers shall require no derating when ganged with other devices.

D. Fluorescent Lamp Dimmer Switches: Modular; compatible with dimmer ballasts; trim potentiometer to adjust low-end dimming; dimmer-ballast combination capable of consistent dimming with low end not greater than 20 percent of full brightness.

2.9 OCCUPANCY SENSORS

A. Exterior Occupancy Sensors:
   1. Available Products: Subject to compliance with requirements, products that may be incorporated into the Work include, but are not limited to, the following:
      a. Leviton; PS200-10.
      b. Watt Stopper (The); EW-100-120.
   2. Description: Passive-infrared type, 120/277 V, weatherproof, adjustable time delay up to 15 minutes, 180-degree field of view, and 110-foot detection range. Minimum switch rating: 1,000 W incandescent, 500-VA fluorescent.

2.10 COMMUNICATIONS OUTLETS

A. Telephone Outlet:
   1. Available Products: Subject to compliance with requirements, products that may be incorporated into the Work include, but are not limited to, the following:
      a. Cooper; 3560-6.
      b. Leviton; 40649.
   2. Description: Single RJ-45 jack for terminating 100 ohm, balanced, four-pair UTP; TIA/EIA-568-B.1; complying with Category 6. Comply with UL 1863.

B. Combination TV and Telephone Outlet:
   1. Available Products: Subject to compliance with requirements, products that may be incorporated into the Work include, but are not limited to, the following:
      a. Cooper; 3562.
      b. Leviton; 40595.
   2. Description: Single RJ-45 jack for 100 ohm, balanced, four-pair UTP; TIA/EIA-568-B.1; complying with Category 6; and one Type F coaxial cable connector.

2.11 WALL PLATES

A. Single and combination types to match corresponding wiring devices.
   1. Plate-Securing Screws: Metal with head color to match plate finish.
   2. Material for Finished Spaces: Steel with white baked enamel, suitable for field painting or Smooth, high-impact thermoplastic.
   3. Material for Unfinished Spaces: Galvanized steel.
   4. Material for Damp Locations: Cast aluminum with spring-loaded lift cover, and listed and labeled for use in “wet locations”.

B. Wet-Location, Weatherproof Cover Plates: NEMA 250, complying with type 4X weather-resistant, die-cast aluminum with lockable cover.

2.12 MULTIOUTLET ASSEMBLIES

A. Available Manufacturers: Subject to compliance with requirements, manufacturers offering products that may be incorporated into the Work include, but are not limited to, the following:
   1. Hubbell Incorporated; Wiring Device-Kellems.
   2. Wiremold Company (The).

B. Components of Assemblies: Products from a single manufacturer designed for use as a complete, matching assembly of raceways and receptacles.

C. Raceway Material: Metal, with manufacturer's standard finish.

D. Wire: No. 12 AWG.

2.13 FINISHES

A. Color: Wiring device catalog numbers in Section Text do not designate device color.
   1. Wiring Devices Connected to Normal Power System: As selected by Owner, unless otherwise indicated or required by NFPA 70 or device listing.
   2. Wiring Devices Connected to Emergency Power System: Red.
   3. TVSS Devices: Blue.
   4. Isolated-Ground Receptacles: As specified above, with orange triangle on face.

PART 3 - EXECUTION

3.1 INSTALLATION

A. Comply with NECA 1, including the mounting heights listed in that standard, unless otherwise noted.

B. Coordination with Other Trades:
   1. Take steps to insure that devices and their boxes are protected. Do not place wall finish materials over device boxes and do not cut holes for boxes with routers that are guided by riding against outside of the boxes.
   2. Keep outlet boxes free of plaster, drywall joint compound, mortar, cement, concrete, dust, paint, and other material that may contaminate the raceway system, conductors, and cables.
   3. Install device boxes in brick or block walls so that the cover plate does not cross a joint unless the joint is troweled flush with the face of the wall.
   4. Install wiring devices after all wall preparation, including painting, is complete.

C. Conductors:
   1. Do not strip insulation from conductors until just before they are spliced or terminated on devices.

2. Strip insulation evenly around the conductor using tools designed for the purpose. Avoid scoring or nicking of solid wire or cutting strands from stranded wire.
3. The length of free conductors at outlets for devices shall meet provisions of NFPA 70, Article 300, without pigtails.
4. Existing Conductors:
   a. Cut back and pigtail, or replace all damaged conductors.
   b. Straighten conductors that remain and remove corrosion and foreign matter.
   c. Pigtailing existing conductors is permitted provided the outlet box is large enough.

D. Device Installation:
1. Replace all devices that have been in temporary use during construction or that show signs that they were installed before building finishing operations were complete.
2. Keep each wiring device in its package or otherwise protected until it is time to connect conductors.
3. Do not remove surface protection, such as plastic film and smudge covers, until the last possible moment.
4. Connect devices to branch circuits using pigtails that are not less than 6 inches in length.
5. When there is a choice, use side wiring with binding-head screw terminals. Wrap solid conductor tightly clockwise, 2/3 to 3/4 of the way around terminal screw.
6. Use a torque screwdriver when a torque is recommended or required by the manufacturer.
7. When conductors larger than No. 12 AWG are installed on 15 or 20-A circuits, splice No. 12 AWG pigtails for device connections.
8. Tighten unused terminal screws on the device.
9. When mounting into metal boxes, remove the fiber or plastic washers used to hold device mounting screws in yokes, allowing metal-to-metal contact.

E. Receptacle Orientation:
1. Install ground pin of vertically mounted receptacles down, and on horizontally mounted receptacles to the left.

F. Device Plates: Do not use oversized or extra-deep plates. Repair wall finishes and remount outlet boxes when standard device plates do not fit flush or do not cover rough wall opening.

G. Arrangement of Devices: Unless otherwise indicated, mount flush, with long dimension vertical and with grounding terminal of receptacles on top. Group adjacent switches under single, multi-gang wall plates.

3.2 IDENTIFICATION

A. Comply with Division 26 Section 0553.

1. Receptacles: Identify panelboard and circuit number from which served. Use hot, stamped or engraved machine printing with black -filled lettering on face of plate, and durable wire markers or tags inside outlet boxes.

END OF SECTION 26 2726

SECTION 26 2813 - FUSES

PART 1 - GENERAL

1.1 SUMMARY

A. Section Includes: Cartridge fuses rated 600 V ac and less for use in control circuits, enclosed switches panelboards, switchboards enclosed controllers and motor-control centers.

1.2 QUALITY ASSURANCE

A. Electrical Components, Devices, and Accessories: Listed and labeled as defined in NFPA 70, by a qualified testing agency, and marked for intended location and application.

B. Comply with NEMA FU 1 for cartridge fuses.

C. Comply with NFPA 70.

PART 2 - PRODUCTS

2.1 MANUFACTURERS

A. Manufacturers: Subject to compliance with requirements:
1. Cooper Bussmann, Inc.
2. Edison Fuse, Inc.
3. Ferraz Shawmut, Inc.
4. Littelfuse, Inc.

2.2 CARTRIDGE FUSES

A. Characteristics: NEMA FU 1, nonrenewable cartridge fuses with voltage ratings consistent with circuit voltages.

PART 3 - EXECUTION

3.1 FUSE APPLICATIONS

A. Service Entrance: Class RK1, fast acting.

B. Feeders: Class L, time delay.

C. Motor Branch Circuits: Class RK1, time delay.

D. Other Branch Circuits: Class RK1, time delay.

E. Control Circuits: Class CC, fast acting.

3.2 INSTALLATION

A. Install fuses in fusible devices. Arrange fuses so rating information is readable without removing fuse.

3.3 IDENTIFICATION

A. Install labels complying with requirements for identification specified in Division 26 Section 0553 and indicating fuse replacement information on inside door of each fused switch and adjacent to each fuse block and holder.

END OF SECTION 26 2813

SECTION 26 4113 - LIGHTNING PROTECTION FOR STRUCTURES

PART 1 - GENERAL

1.1 RELATED DOCUMENTS

A. Drawings and general provisions of the Contract, including General and Supplementary Conditions and Division 01 Specification Sections, apply to this Section.

1.2 SUMMARY

A. Section includes lightning protection for structures, structure elements and building site components.

1.3 SUBMITTALS

A. Product Data: For each type of product indicated.

B. Shop Drawings: For air terminals and mounting accessories.
   1. Layout of the lightning protection system, along with details of the components to be used in the installation.
   2. Include indications for use of raceway, data on how concealment requirements will be met, and calculations required by NFPA 780 for bonding of grounded and isolated metal bodies.

C. Qualification Data: For qualified Installer and manufacturer. Include data on listing or certification by UL.

D. Certification, signed by Contractor, that roof adhesive is approved by manufacturer of roofing material.

E. Field quality-control reports.

F. Comply with recommendations in NFPA 780, Annex D, “Inspection and Maintenance of Lightning Protection Systems”, for maintenance of the lightning protection system.

G. Other Informational Submittals: Plans showing dimensioned as-built locations of grounding features, including the following:
   1. Ground rods.
   2. Ground loop conductor.

1.4 QUALITY ASSURANCE

A. Installer Qualifications: Certified by UL or LPI as a Master Installer/Designer, trained and approved for installation of units required for this Project.

B. System Certificate:
   1. UL Master Label.
   2. LPI System Certificate.
   3. UL Master Label Recertification.

C. Electrical Components, Devices, and Accessories: Listed and labeled as defined in NFPA 780, “Definitions” Article.

1.5 COORDINATION

A. Coordinate installation of lightning protection with installation of other building systems and components, including electrical wiring, supporting structures and building materials, metal bodies requiring bonding to lightning protection components, and building finishes.

B. Coordinate installation of air terminals attached to roof systems with roofing manufacturer and Installer.

C. Flashings of through-roof assemblies shall comply with roofing manufacturers' specifications.

PART 2 - PRODUCTS

2.1 LIGHTNING PROTECTION SYSTEM COMPONENTS

A. Comply with UL 96 and NFPA 780.

B. Roof-Mounted Air Terminals: NFPA 780, Class II (aluminum/copper) unless otherwise indicated.
   1. Manufacturers: Subject to compliance with requirements, provide products by one of the following available manufacturers. Offering products that may be incorporated into the Work include, but are not limited to, the following**:**
   2. Basis-of-Design Product: Subject to compliance with requirements, provide product indicated on Drawings or comparable product by one of the following:
      a. East Coast Lightning Equipment Inc.
      b. ERICO International Corporation.
      c. Harger.
      d. Heary Bros. Lightning Protection Co. Inc.
      e. Independent Protection Co.

f. Preferred Lightning Protection.
g. Robbins Lightning, Inc.
h. Thompson Lightning Protection, Inc.

3. Air Terminals More than 24 Inches Long: With brace attached to the terminal at not less than half the height of the terminal.
4. Single-Membrane, Roof-Mounted Air Terminals: Designed specifically for single-membrane roof system materials. Comply with requirements in Division 07 roofing Sections.

C. Main and Bonding Conductors: Copper.

D. Ground Loop Conductor: The same size and type as the main conductor except tinned.

E. Ground Rods: Copper-clad or Zinc-coated steel, 5/8 inch in diameter by 96 inches long.

F. Heavy-Duty, Stack-Mounted, Lightning Protection Components: Stainless steel, Solid copper, Monel metal or Lead sheathed.

PART 3 - EXECUTION

3.1 INSTALLATION

A. Install lightning protection components and systems according to UL96 and NFPA 780.

B. Install conductors with direct paths from air terminals to ground connections. Avoid sharp bends.

C. Conceal the following conductors:
1. System conductors.
2. Down conductors.
3. Interior conductors.
4. Conductors within normal view of exterior locations at grade within 200 feet of building.

D. Cable Connections: Use crimped or bolted connections for all conductor splices and connections between conductors and other components. Use exothermic-welded connections in underground portions of the system.

E. Cable Connections: Use exothermic-welded connections for all conductor splices and connections between conductors and other components.
1. Exception: In single-ply membrane roofing, exothermic-welded connections may be used only below the roof level.

F. Air Terminals on Single-Ply Membrane Roofing: Comply with roofing membrane and adhesive manufacturer's written instructions.

G. Bond extremities of vertical metal bodies exceeding 60 feet in length to lightning protection components.

H. Ground Loop: Install ground-level, potential equalization conductor and extend around the perimeter of the structure of or item indicated.
   1. Bury ground ring not less than 24 inches from building foundation.
   2. Bond ground terminals to the ground loop.
   3. Bond grounded building systems to the ground loop conductor within 12 feet of grade level.

I. Bond lightning protection components with intermediate-level interconnection loop conductors to grounded metal bodies of building at 60 foot intervals.

3.2 CORROSION PROTECTION

A. Do not combine materials that can form an electrolytic couple that will accelerate corrosion in the presence of moisture unless moisture is permanently excluded from junction of such materials.

B. Use conductors with protective coatings where conditions cause deterioration or corrosion of conductors.

3.3 FIELD QUALITY CONTROL

A. Notify Architect at least 48 hours in advance of inspection before concealing lightning protection components.

B. UL Inspection: Meet requirements to obtain a UL Master Label for system.

C. LPI System Inspection: Meet requirements to obtain an LPI System Certificate.

END OF SECTION 26 4113

SECTION 26 5600 - EXTERIOR LIGHTING

PART 1 - GENERAL

1.1 SUMMARY

A. This Section includes the following:
   1. Exterior luminaires with lamps and ballasts.
   2. Luminaire-mounted photoelectric relays.
   3. Poles and accessories.

1.2 STRUCTURAL ANALYSIS CRITERIA FOR POLE SELECTION

A. Dead Load: Weight of luminaire and its horizontal and vertical supports and supporting structure, applied as stated in AASHTO LTS-4.

B. Ice Load: Load of 3 lbf/sq. ft., applied as stated in AASHTO LTS-4.

C. Wind Load: Pressure of wind on pole and luminaire, calculated and applied as stated in AASHTO LTS-4.
   1. Wind speed for calculating wind load for poles exceeding 50 feet in height is 110 mph.
   2. Wind speed for calculating wind load for poles 50 feet or less in height is 110 mph.

1.3 QUALITY ASSURANCE

A. Electrical Components, Devices, and Accessories: Listed and labeled as defined in NFPA 70, Article 100, by a testing agency acceptable to authorities having jurisdiction, and marked for intended use.

B. Comply with IEEE C2, “National Electrical Safety Code”.

C. Comply with NFPA 70.

PART 2 - PRODUCTS

2.1 MANUFACTURERS

A. In Exterior Lighting Device Schedule where titles below are column or row headings that introduce lists, the following requirements apply to product selection:

1. Available Manufacturers: Subject to compliance with requirements, provide products by one of the following available manufacturers offering products that may be incorporated into the Work include, but are not limited to, the following:

2.2 LUMINAIRES, GENERAL REQUIREMENTS

A. Luminaires shall comply with UL 1598 and be listed and labeled for installation in wet locations by an NRTL acceptable to authorities having jurisdiction.

B. Comply with IESNA RP-8 for parameters of lateral light distribution patterns indicated for luminaires.

C. Metal Parts: Free of burrs and sharp corners and edges.

D. Sheet Metal Components: Corrosion-resistant aluminum, unless otherwise indicated. Form and support to prevent warping and sagging.

E. Housings: Rigidly formed, weather- and light-tight enclosures that will not warp, sag, or deform in use. Provide filter/breather for enclosed luminaires.

F. Doors, Frames, and Other Internal Access: Smooth operating, free of light leakage under operating conditions, and designed to permit relamping without use of tools. Designed to prevent doors, frames, lenses, diffusers, and other components from falling accidentally during relamping and when secured in operating position. Doors shall be removable for cleaning or replacing lenses. Designed to disconnect ballast when door opens.

G. Exposed Hardware Material: Stainless steel.

H. Plastic Parts: High resistance to yellowing and other changes due to aging, exposure to heat, and UV radiation.

I. Light Shields: Metal baffles, factory installed and field adjustable, arranged to block light distribution to indicated portion of normally illuminated area or field.

J. Reflecting surfaces shall have minimum reflectance as follows, unless otherwise indicated:
   1. White Surfaces: 85 percent.
   2. Specular Surfaces: 83 percent.
   3. Diffusing Specular Surfaces: 75 percent.

K. Lenses and Refractors Gaskets: Use heat and aging-resistant resilient gaskets to seal and cushion lenses and refractors in luminaire doors.

L. Luminaire Finish: Manufacturer's standard paint applied to factory-assembled and -tested luminaire before shipping. Where indicated; match finish process and color of pole or support materials.

M. Factory-Applied Finish for Steel Luminaires: Color as selected by Owner. Comply with NAAMM's “Metal Finishes Manual for Architectural and Metal Products”, for recommendations for applying and designating finishes.

N. Factory-Applied Finish for Aluminum Luminaires: Color shall be dark bronze. Comply with NAAMM's “Metal Finishes Manual for Architectural and Metal Products”, for recommendations for applying and designating finishes.

2.3 LUMINAIRE-MOUNTED PHOTOELECTRIC RELAYS

A. Comply with UL 773 or UL 773A.

B. Contact Relays: Factory mounted, single throw, designed to fail in the on position, and factory set to turn light unit on at 1.5 to 3 fc and off at 4.5 to 10 fc with 15 second minimum time delay.
   1. Relay with locking-type receptacle shall comply with NEMA C136.10.
   2. Adjustable window slide for adjusting on-off set points.

2.4 FLUORESCENT BALLASTS AND LAMPS

A. Low-Temperature Ballast Capability: Rated by its manufacturer for reliable starting and operation of indicated lamp(s) at temperatures 0 deg F and higher.

B. Ballast Characteristics:
   1. Power Factor: 90 percent, minimum.
   2. Sound Rating: A.
   3. Total Harmonic Distortion Rating: Less than 10 percent.
   4. Electromagnetic Ballasts: Comply with ANSI C82.1, energy-saving, high power factor, Class P, automatic-reset thermal protection.
   5. Case Temperature for Compact Lamp Ballasts: 65 deg C, maximum.
   6. Transient-Voltage Protection: Comply with IEEE C62.41 Category A or better.

C. Low-Temperature Lamp Capability: Rated for reliable starting and operation with ballast provided at temperatures 0 deg F and higher.

D. Fluorescent Lamps: Low-mercury type. Comply with the EPA’s toxicity characteristic leaching procedure test; shall yield less than 0.2 mg of mercury per liter when tested according to NEMA LL 1.

2.5 BALLASTS FOR HID LAMPS

A. Comply with ANSI C82.4 and UL 1029 and capable of open-circuit operation without reduction average life. Include the following features, unless otherwise indicated:
   1. Ballast Circuit: Constant-wattage autotransformer or regulating high-power-factor type.

2. Minimum Starting Temperature: Minus 22 deg F.
3. Normal Ambient Operating Temperature: 104 deg F.
4. Ballast Fuses: One in each ungrounded power supply conductor. Voltage and current ratings as recommended by ballast manufacturer.

B. High-Pressure Sodium Ballasts: Electromagnetic type with solid-state igniter/starter and capable of open-circuit operation without reduction of average lamp life. Igniter/starter shall have an average life in pulsing mode of 10,000 hours at an igniter/starter-case temperature of 90 deg C.
1. Instant-Restrike Device: Integral with ballast, or solid-state potted module, factory installed within fixture and compatible with lamps, ballasts, and mogul sockets up to 150 W.
a. Restrike Range: 105 to 130 V ac.
b. Maximum Voltage: 250 V peak or 150 V ac RMS.
2. Minimum Starting Temperature: Minus 40 deg F.

2.6 HID LAMPS

A. High-Pressure Sodium Lamps: ANSI C78.42, CRI 21 (minimum), color temperature 1,900 K, and average rated life of 24,000 hours, minimum.

B. Metal-Halide Lamps: ANSI C78.1372, with a minimum CRI 65, and color temperature 4,000 K.

C. Pulse-Start, Metal-Halide Lamps: Minimum CRI 65, and color temperature 4,000 K.

D. Ceramic, Pulse-Start, Metal-Halide Lamps: Minimum CRI 80, and color temperature 4,000 K.

2.7 POLES AND SUPPORT COMPONENTS, GENERAL REQUIREMENTS

A. Structural Characteristics: Comply with AASHTO LTS-4.
1. Wind-Load Strength of Poles: Adequate at indicated heights above grade without failure, permanent deflection, or whipping in steady winds of speed indicated in Part 1 “Structural Analysis Criteria for Pole Selection”, Article, with a gust factor of 1.3.
2. Strength Analysis: For each pole, multiply the actual equivalent projected area of luminaires and brackets by a factor of 1.1 to obtain the equivalent projected area to be used in pole selection strength analysis.

B. Luminaire Attachment Provisions: Comply with luminaire manufacturers' mounting requirements. Use stainless-steel fasteners and mounting bolts, unless otherwise indicated.

C. Mountings, Fasteners, and Appurtenances: Corrosion-resistant items compatible with support components.

1. Materials: Shall not cause galvanic action at contact points.
2. Anchor Bolts, Leveling Nuts, Bolt Caps, and Washers: Hot-dip galvanized after fabrication, unless stainless-steel items are indicated.
3. Anchor-Bolt Template: Plywood or steel.

D. Concrete Pole Foundations: Cast in place, with anchor bolts to match pole-base flange. Concrete, reinforcement, and formwork are specified in Division 03 Section 3000.

E. Power-Installed Screw Foundations: Factory fabricated by pole manufacturer, with structural steel complying with ASTM A 36/A 36M and hot-dip galvanized according to ASTM A 123/A 123M; and with top-plate and mounting bolts to match pole base flange and strength required to support pole, luminaire, and accessories.

F. Breakaway Supports: Frangible breakaway supports, tested by an independent testing agency acceptable to authorities having jurisdiction, according to AASHTO LTS-4.

2.8 STEEL POLES

A. Poles: Comply with ASTM A 500, Grade B, carbon steel with a minimum yield of 46,000 psig; 1 piece construction up to 40 feet in height with access handhole in pole wall.
1. Shape: Square, straight.
2. Mounting Provisions: Butt flange for bolted mounting on foundation or breakaway support.

B. Steel Mast Arms: Single-arm type, continuously welded to pole attachment plate. Material and finish same as pole.

C. Brackets for Luminaires: Detachable, cantilever, without underbrace.
1. Adapter fitting welded to pole and bracket, then, bolted together with galvanized-steel bolts.
2. Cross Section: Tapered oval, with straight tubular end section to accommodate luminaire.
3. Match pole material and finish.

D. Pole-Top Tenons: Fabricated to support luminaire or luminaires and brackets indicated, and securely fastened to pole top.

E. Steps: Fixed steel, with nonslip treads, positioned for 15 inch vertical spacing, alternating on opposite sides of pole; first step at elevation 10 feet above finished grade.

F. Grounding and Bonding Lugs: Welded 1/2 inch threaded lug, complying with requirements in Division 26 Section 0526. Listed for attaching grounding and bonding conductors of type and size listed in that Section, and accessible through handhole.

G. Cable Support Grip: Wire-mesh type with rotating attachment eye, sized for diameter of cable and rated for a minimum load equal to weight of supported cable times a 5.0 safety factor.

H. Prime-Coat Finish: Manufacturer's standard prime-coat finish ready for field painting.

I. Galvanized Finish: After fabrication, hot-dip galvanize complying with ASTM A 123/A 123M.

J. Factory-Painted Finish: Comply with NAAMM's “Metal Finishes Manual for Architectural and Metal Products”, for recommendations for applying and designating finishes. Color shall be as selected by Owner.

2.9 ALUMINUM POLES

A. Poles: Seamless, extruded structural tube complying with ASTM B 429, Alloy 6063-T6 with access handhole in pole wall.

B. Pole-Top Tenons: Fabricated to support luminaire or luminaires and brackets indicated, and securely fastened to pole top.

C. Grounding and Bonding Lugs: Welded 1/2 inch threaded lug, complying with requirements in Division 26 Section 0526, listed for attaching grounding and bonding conductors of type and size listed in that Section, and accessible through handhole.

D. Brackets for Luminaires: Detachable, with pole and adapter fittings of cast aluminum. Adapter fitting welded to pole and bracket, then, bolted together with stainless-steel bolts.
   1. Tapered oval cross section, with straight tubular end section to accommodate luminaire.
   2. Finish: Same as pole.

E. Prime-Coat Finish: Manufacturer’s standard prime-coat finish ready for field painting.

F. Aluminum Finish: Comply with NAAMM's “Metal Finishes Manual for Architectural and Metal Products”, for recommendations for applying and designating finishes. Color shall be dark bronze.

2.10 POLE ACCESSORIES

A. Base Covers: Manufacturers’ standard metal units, arranged to cover pole's mounting bolts and nuts. Finish same as pole.

PART 3 - EXECUTION

3.1 LUMINAIRE INSTALLATION

A. Install lamps in each luminaire.

B. Fasten luminaire to the indicated structural supports.
   1. Use fastening methods and materials selected to resist seismic forces defined for the application and approved by manufacturer.

C. Adjust luminaires that require field adjustment or aiming. Include adjustment of photoelectric device to prevent false operation of relay by artificial light sources.

3.2 POLE INSTALLATION

A. Align pole foundations and poles for optimum directional alignment of luminaires and their mounting provisions on the pole.

B. Clearances: Maintain the following minimum horizontal distances of poles from surface and underground features, unless otherwise indicated on Drawings:
   1. Fire Hydrants and Storm Drainage Piping: 60 inches.
   2. Water, Gas, Electric, Communication, and Sewer Lines: 10 feet.
   3. Trees: 15 feet.

C. Concrete Pole Foundations: Set anchor bolts according to anchor-bolt templates furnished by pole manufacturer. Concrete materials, installation, and finishing requirements are specified in Division 03 Section 3000.

D. Foundation-Mounted Poles: Mount pole with leveling nuts, and tighten top nuts to torque level recommended by pole manufacturer.
   1. Use anchor bolts and nuts selected to resist seismic forces defined for the application and approved by manufacturer.
   2. Grout void between pole base and foundation. Use nonshrink or expanding concrete grout firmly packed to fill space.
   3. Install base covers, unless otherwise indicated.
   4. Use a short piece of 1/2 inch diameter pipe to make a drain hole through grout. Arrange to drain condensation from interior of pole.

E. Embedded Poles with Tamped Earth Backfill: Set poles to depth below finished grade indicated on Drawings, but not less than one-sixth of pole height.
   1. Dig holes large enough to permit use of tampers in the full depth of hole.
   2. Backfill in 6 inch layers and thoroughly tamp each layer so compaction of backfill is equal to or greater than 95% density.

F. Embedded Poles with Concrete Backfill: Set poles in augered holes to depth below finished grade indicated on Drawings, but not less than one-sixth of pole height.

1. Make holes the diameter shown in concrete details per drawings.
2. Fill augered hole around pole with air-entrained concrete having a minimum compressive strength of 3,000 psi at 28 days, and finish in a dome above finished grade.
3. Use a short piece of 1/2 inch diameter pipe to make a drain hole through concrete dome. Arrange to drain condensation from interior of pole.
4. Cure concrete a minimum of 72 hours before performing work on pole.

G. Poles and Pole Foundations Set in Concrete Paved Areas: Install poles with minimum of 6 inch wide, unpaved gap between the pole or pole foundation and the edge of adjacent concrete slab. Fill unpaved ring with pea gravel Insert material to a level 1 inch below top of concrete slab.

H. Raise and set poles using web fabric slings (not chain or cable).

3.3 CORROSION PREVENTION

A. Aluminum: Do not use in contact with earth or concrete. When in direct contact with a dissimilar metal, protect aluminum by insulating fittings or treatment.

B. Steel Conduits: Comply with Division 26 Section “Raceway and Boxes for Electrical Systems”. In concrete foundations, wrap conduit with 0.010 inch thick, pipe-wrapping plastic tape applied with a 50 percent overlap.

3.4 GROUNDING

A. Ground metal poles and support structures according to Division 26 Section 0526 and Division 26, Section 4113 as appropriate.
   1. Install grounding electrode for each pole, unless otherwise indicated.
   2. Install grounding conductor pigtail in the base for connecting luminaire to grounding system.

B. Ground nonmetallic poles and support structures according to Division 26 Section 0526.
   1. Install grounding electrode for each pole.
   2. Install grounding conductor and conductor protector.
   3. Ground metallic components of pole accessories and foundations.

END OF SECTION 26 5600

SECTION 27 0500 - COMMON WORK RESULTS FOR COMMUNICATIONS

PART 1 - GENERAL

1.1 SUMMARY

A. Section Includes:
   1. Sleeves for pathways and cables.
   2. Sleeve seals.
   3. Grout.
   4. Common communications installation requirements.

PART 2 - PRODUCTS

2.1 SLEEVES FOR PATHWAYS AND CABLES

A. Steel Pipe Sleeves: ASTM A53/A53M, Type E, Grade B, Schedule 40, galvanized steel, plain ends, painted or dipped.

B. Cast-Iron Pipe Sleeves: Cast or fabricated “wall pipe”, equivalent to ductile-iron pressure pipe, with plain ends and integral waterstop, unless otherwise indicated.

C. Sleeves for Rectangular Openings: Galvanized sheet steel.
   1. Minimum Metal Thickness:
      a. For sleeve cross-section rectangle perimeter less than 50 inches and no side more than 16 inches, thickness shall be 0.052 inch.
      b. For sleeve cross-section rectangle perimeter equal to, or more than, 50 inches and 1 or more sides equal to, or more than, 16 inches, thickness shall be 0.138 inch.

2.2 SLEEVE SEALS

A. Description: Modular sealing device, designed for field assembly, to fill annular space between sleeve and pathway or cable.
   1. Available Manufacturers: Subject to compliance with requirements, manufacturers offering products that may be incorporated into the Work include, but are not limited to, the following:
   2. Basis-of-Design Product: Subject to compliance with requirements, provide or comparable product by one of the following:
      a. Advance Products & Systems, Inc.
      b. Calpico, Inc.
      c. Metraflex Co.
      d. Pipeline Seal and Insulator, Inc.

3. Sealing Elements: EPDM interlocking links shaped to fit surface of cable or conduit. Include type and number required for material and size of pathway or cable.
4. Pressure Plates: Plastic. Include two for each sealing element.
5. Connecting Bolts and Nuts: Carbon steel with corrosion-resistant coating of length required to secure pressure plates to sealing elements. Include one for each sealing element.

2.3 GROUT

A. Nonmetallic, Shrinkage-Resistant Grout: ASTM C 1107, factory-packaged, nonmetallic fine aggregate grout, noncorrosive, nonstaining, mixed with water to consistency suitable for application and a 30 minute working time.

PART 3 - EXECUTION

3.1 COMMON REQUIREMENTS FOR COMMUNICATIONS INSTALLATION

A. Comply with NECA 1.

B. Measure indicated mounting heights to bottom of unit for suspended items and to center of unit for wall-mounting items.

C. Headroom Maintenance: If mounting heights or other location criteria are not indicated, arrange and install components and equipment to provide maximum possible headroom consistent with NEC 110.26(E).

D. Equipment: Install to facilitate service, maintenance, and repair or replacement of components of both communications equipment and other nearby installations. Connect in such a way as to facilitate future disconnecting with minimum interference with other items in the vicinity.

E. Right of Way: Give to piping systems installed at a required slope.

3.2 SLEEVE INSTALLATION FOR COMMUNICATIONS PENETRATIONS

A. Communications penetrations occur when pathways, cables, wireways, or cable trays penetrate concrete slabs, concrete or masonry walls, or fire-rated floor and wall assemblies.

B. Use pipe sleeves for penetrations of fire-rated floor and wall assemblies unless penetration arrangement requires rectangular sleeved opening.

C. Fire-Rated Assemblies: Install sleeves for penetrations of fire-rated floor and wall assemblies unless openings compatible with firestop system used are fabricated during construction of floor or wall.

D. Cut sleeves to length for mounting flush with both surfaces of walls.

E. Extend sleeves installed in floors 2 inches above finished floor level.

F. Size pipe sleeves to provide 1/4 inch annular clear space between sleeve and pathway or cable, unless indicated otherwise.

G. Seal space outside of sleeves with grout for penetrations of concrete and masonry.
   1. Promptly pack grout solidly between sleeve and wall so no voids remain. Tool exposed surfaces smooth; protect grout while curing.

H. Fire-Rated-Assembly Penetrations: Maintain indicated fire rating of walls, partitions, ceilings, and floors at pathway and cable penetrations. Install sleeves and seal pathway and cable penetration sleeves with firestop materials.

3.3 SLEEVE-SEAL INSTALLATION

A. Install to seal Fire-Rated exterior wall penetrations.

B. Use type and number of sealing elements recommended by manufacturer for pathway or cable material and size. Position pathway or cable in center of sleeve. Assemble mechanical sleeve seals and install in annular space between pathway or cable and sleeve. Tighten bolts against pressure plates that cause sealing elements to expand and make watertight seal.

3.4 FIRESTOPPING

A. Apply firestopping to penetrations of fire-rated floor and wall assemblies for communications installations to restore original fire-resistance rating of assembly as indicated in NEC 300.21.

END OF SECTION 27 0500

SECTION 27 1300 - COMMUNICATIONS BACKBONE CABLING

PART 1 - GENERAL

1.1 SUMMARY

A. Section Includes:
   1. Pathways.
   2. UTP cable.
   3. STP cabling
   4. Fiber Optic cabling.
   5. Cable connecting hardware, patch panels, and cross-connects.
   6. Cabling identification products.

B. Related Sections:
   1. Division 27 Section 1500 – COMMUNICATIONS HORIZONTAL CABLING for voice and data cabling associated with system panels and devices.

1.2 BACKBONE CABLING DESCRIPTION

A. Backbone cabling system shall provide interconnections between communications equipment rooms, main terminal space, and entrance facilities in the telecommunications cabling system structure. Cabling system consists of backbone cables, intermediate and main cross-connects, mechanical terminations, and patch cords or jumpers used for backbone-to-backbone cross-connection.

B. Backbone cabling cross-connects may be located in communications equipment rooms or at entrance facilities. Bridged taps and splitters shall not be used as part of backbone cabling.

1.3 PERFORMANCE REQUIREMENTS

A. General Performance: Backbone cabling system shall comply with transmission standards in TIA/EIA-568-B.1, when tested according to test procedures of this standard.

1.4 QUALITY ASSURANCE

A. Electrical Components, Devices, and Accessories: Listed and labeled as defined in NFPA 70, by a qualified testing agency, and marked for intended location and application.

B. Telecommunications Pathways and Spaces: Comply with TIA/EIA-569-A.

C. Grounding: Comply with ANSI-J-STD-607-A.

1.5 DELIVERY, STORAGE, AND HANDLING

A. Test each pair of UTP cable for open and short circuits.

B. Test each pair of STP cable for open and short circuits.

C. Test each fiber strand of fiber optic cable for open and short circuits.

PART 2 - PRODUCTS

2.1 PATHWAYS

A. Cable Support: NRTL labeled for support of Category 6 cabling, designed to prevent degradation of cable performance and pinch points that could damage cable.
   1. Support brackets with cable tie slots for fastening cable ties to brackets.
   2. Lacing bars, spools, J-hooks, and D-rings.
   3. Straps and other devices.

B. Cable Trays:
   1. Available Manufacturers: Subject to compliance with requirements, manufacturers offering products that may be incorporated into the Work include, but are not limited to, the following:
      a. Cable Management Solutions, Inc.
      b. Cablofil Inc.
      c. Cooper B-Line, Inc.
      d. Cope - Tyco/Allied Tube & Conduit.
      e. GS Metals Corp.
   2. Cable Tray Material: Metal, suitable for indoors, and protected against corrosion by electroplated zinc galvanizing, complying with ASTM B 633, Type 1, not less than 0.000472 inches thick.
      a. Basket Cable Trays: 6 inches wide and 2 inches deep. Wire mesh spacing shall not exceed 2 by 4 inches.
      b. Trough Cable Trays: Nominally 6 inches wide.
      c. Ladder Cable Trays: Nominally 18 inches wide, and a rung spacing of 12 inches.
      d. Channel Cable Trays: One-piece construction, nominally 4 inches wide. Slot spacing shall not exceed 4 and 1/2 inches o.c.
      e. Solid-Bottom Cable Trays: One-piece construction, nominally 12 inches wide. Provide without solid covers.

C. Conduit and Boxes: Comply with requirements in Division 26 Section 0533.
   1. Outlet boxes shall be no smaller than 2 inches wide, 3 inches high, and 2 and 1/2 inches deep.

2.2 BACKBOARDS

A. Backboards: Plywood, exterior grade Douglas Fir, treated with fire retardant material, 3/4 by 48 by 96 inches, finished on one side. Prime paint all surfaces and edges and finish paint the front with light grey enamel.

2.3 UTP CABLE

A. Description: 100 ohm, 100 pair UTP, formed into 25 pair binder groups covered with a thermoplastic jacket and overall metallic shield.
   1. Comply with ICEA S-90-661 for mechanical properties.
   2. Comply with TIA/EIA-568-B.1 for performance specifications.
   3. Comply with TIA/EIA-568-B.2.
   4. Listed and labeled by an NRTL acceptable to authorities having jurisdiction as complying with UL 444 and NFPA 70 for the following types:
      a. Communications, General Purpose: Type CM or CMG.
      b. Communications, Plenum Rated: Type CMP, complying with NFPA 262.
      c. Communications, Riser Rated: Type CMR, complying with UL 1666.
      d. Communications, Limited Purpose: Type CMX.
      e. Multipurpose: Type MP or MPG.
      f. Multipurpose, Plenum Rated: Type MPP, complying with NFPA 262.
      g. Multipurpose, Riser Rated: Type MPR, complying with UL 1666.

2.4 UTP CABLE HARDWARE

A. Available Manufacturers: Subject to compliance with requirements, manufacturers offering products that may be incorporated into the Work include, but are not limited to, the following:
   1. American Technology Systems Industries, Inc.
   2. Dynacom Corporation.
   3. Hubbell Premise Wiring.
   4. KRONE Incorporated.
   5. Leviton Voice & Data Division.
   6. Molex Premise Networks; a division of Molex, Inc.
   7. Nordex/CDT; a subsidiary of Cable Design Technologies.
   8. Panduit Corp.
   9. Siemon Co. (The).
   10. Tyco Electronics/AMP Netconnect; Tyco International Ltd.

B. General Requirements for Cable Connecting Hardware: Comply with TIA/EIA-568-B.2, IDC type, with modules designed for punch-down caps or tools. Cables shall be terminated with connecting hardware of same category or higher.

C. Connecting Blocks: 110-style IDC for Category 6. Provide blocks for the number of cables terminated on the block, plus 25 percent spare. Integral with connector bodies, including plugs and jacks where indicated.

D. Cross-Connect: Modular array of connecting blocks arranged to terminate building cables and permit interconnection between cables.
   1. Number of Terminals per Field: One for each conductor in assigned cables.

E. Patch Panel: Modular panels housing multiple-numbered jack units with IDC-type connectors at each jack for permanent termination of pair groups of installed cables.
   1. Number of Jacks per Field: One for each four pair UTP cable indicated.

F. Jacks and Jack Assemblies: Modular, color-coded, eight position modular receptacle units with integral IDC-type terminals.

G. Patch Cords: Factory-made, 4 pair cables in 36 inch lengths; terminated with 8 position modular plug at each end.
   1. Patch cords shall have bend-relief-compliant boots and color-coded icons to ensure Category 6 performance. Patch cords shall have latch guards to protect against snagging.
   2. Patch cords shall have color-coded boots for circuit identification.

2.5 CAT6 STP CABLE

A. Available Manufacturers: Subject to compliance with requirements, manufacturers offering products that may be incorporated into the Work include, but are not limited to, the following:
   1. Alpha.
   2. Belden CDT Inc.; Electronics Division.
   3. Mohawk; a division of Belden CDT.
   4. Hyperline.
   5. Commscope.
   6. Superior Essex.
   7. Berk-Tek.

B. Description: 23 AWG Solid Bare copper insulated conductors, assembled with four tightly twisted pairs with an internal separator, overall foil and drain shield, and overall jacket.
   1. Comply with ISO/IEC11801 CAT 6 cable requirements.
   2. Comply with TIA/EIA-568-B.1CAT 6 for performance specifications.
   3. Comply with TIA/EIA-568-B.2 CAT6.
   4. Listed and labeled by an NRTL acceptable to authorities having jurisdiction as complying with UL 444 and NFPA 70 for the following types:
      a. Communications, Non-Plenum Rated: Type CMR.
      b. Communications, Plenum Rated: Type CMP, complying with NFPA 262.

2.6 CAT6 STP CABLE HARDWARE

A. Available Manufacturers: Subject to compliance with requirements, manufacturers offering products that may be incorporated into the Work include, but are not limited to, the following:
   1. American Technology Systems Industries, Inc.
   2. Dynacom Corporation.
   3. Hubbell Premise Wiring.
   4. KRONE Incorporated.
   5. Leviton Voice & Data Division.
   6. Molex Premise Networks; a division of Molex, Inc.
   7. Nordex/CDT; a subsidiary of Cable Design Technologies.
   8. Panduit Corp.
   9. Siemon Co. (The).
   10. Tyco Electronics/AMP Netconnect; Tyco International Ltd.

B. General Requirements for Cable Connecting Hardware: Comply with TIA/EIA-568-B.2, IDC type, with modules designed for punch-down caps or tools. Cables shall be terminated with connecting hardware of same category or higher suitable for terminating shielded cable.

C. Connecting Blocks: 110-style IDC for Category 6. Provide blocks for the number of cables terminated on the block, plus 25 percent spare. Integral with connector bodies, including plugs and jacks where indicated. Connecting blocks shall be suitable for terminating shielded cable. Plugs and jacks shall be suitable for terminating shielded cable.

D. Jacks and Jack Assemblies: Modular, color-coded, eight-position modular receptacle units with integral IDC-type terminals. Jacks and jack assemblies shall be rated at the same category or higher and suitable for shielded cable.

2.7 OPTICAL FIBER CABLE

A. Available Manufacturers: Subject to compliance with requirements, provide products by one of the following available manufacturers offering products that may be incorporated into the Work include, but are not limited to, the following:
   1. Berk-Tek; a Nexans company.
   2. CommScope, Inc.
   3. Corning Cable Systems.
   4. General Cable Technologies Corporation.
   5. Mohawk; a division of Belden CDT.
   6. Nordex/CDT; a subsidiary of Cable Design Technologies.
   7. Optical Connectivity Solutions Division; Emerson Network Power.
   8. Superior Essex Inc.
   9. SYSTIMAX Solutions; a CommScope, Inc. brand.
   10. 3M.

11. Tyco Electronics/AMP Netconnect; Tyco International Ltd.

B. Description: Single mode, 9/125 micrometer, 12 fiber, 24 fiber and 48 fiber, tight buffer, optical fiber cable.
1. Comply with ICEA S-83-596 for mechanical properties.
2. Comply with ICEA S-87-640 for outside plant.
3. Comply with TIA/EIA-568-B.3 for performance specifications.
4. Comply with TIA/EIA-492AAAA-A for detailed specifications.
5. Listed and labeled by an NRTL acceptable to authorities having jurisdiction as complying with UL 444, UL 1651, and NFPA 70 for the following types:
   a. General Purpose, Nonconductive: Type OFN, OFNR or OFNP.
   b. Plenum Rated, Nonconductive: Type OFNP, complying with NFPA 262.
   c. Riser Rated, Nonconductive: Type OFNR, complying with UL 1666.
   d. General Purpose, Conductive: Type OFC, OFCR or OFCP.
   e. Plenum Rated, Conductive: Type OFCP, complying with NFPA 262.
   f. Riser Rated, Conductive: Type OFCR, complying with UL 1666.
6. Conductive cable shall be steel armored type.
7. Maximum Attenuation; 1.5 dB/km at 1,300 nm and 1,550 nm.

C. Jacket:
1. Jacket Color: Yellow for 9/125 micrometer cable.
2. Cable cordage jacket, fiber, unit, and group color shall be according to TIA/EIA-598-B.
3. Imprinted with fiber count, fiber type, and aggregate length at regular intervals not to exceed 40 inches.

D. Description: Multimode, 50/125 micrometer, 12 fiber and 24 fiber, tight buffer, optical fiber cable.
1. Comply with ICEA S-83-596 for mechanical properties.
2. Comply with ICEA S-87-640 for outside plant.
3. Comply with TIA/EIA-568-B.3 for performance specifications.
4. Comply with TIA/EIA-492AAAA-A for detailed specifications.
5. Listed and labeled by an NRTL acceptable to authorities having jurisdiction as complying with UL 444, UL 1651, and NFPA 70 for the following types:
   a. General Purpose, Nonconductive: Type OFN, OFNR or OFNP.
   b. Plenum Rated, Nonconductive: Type OFNP, complying with NFPA 262.
   c. Riser Rated, Nonconductive: Type OFNR, complying with UL 1666.
   d. General Purpose, Conductive: Type OFC, OFCR or OFCP.
   e. Plenum Rated, Conductive: Type OFCP, complying with NFPA 262.
   f. Riser Rated, Conductive: Type OFCR, complying with UL 1666.
6. Conductive cable shall be steel armored type.
7. Maximum Attenuation: 3.50 dB/km at 850 nm; 1.5 dB/km at 1,300 nm.
8. Minimum Modal Bandwidth: 160 MHz-km at 850 nm; 500 MHz-km at 1,300 nm.

E. Jacket:

1. Jacket Color: Orange for 50/125 micrometer cable.
2. Cable cordage jacket, fiber, unit, and group color shall be according to TIA/EIA-598-B.
3. Imprinted with fiber count, fiber type, and aggregate length at regular intervals not to exceed 40 inches.

2.8 OPTICAL FIBER CABLE HARDWARE

A. Available Manufacturers: Subject to compliance with requirements, provide products by one of the following available manufacturers offering products that may be incorporated into the Work include, but are not limited to, the following:
1. ADC.
2. American Technology Systems Industries, Inc.
3. Berk-Tek; a Nexans company.
4. Corning Cable Systems.
5. Dynacom Corporation.
6. Hubbell Premise Wiring.
7. Molex Premise Networks; a division of Molex, Inc.
8. Nordex/CDT; a subsidiary of Cable Design Technologies.
9. Optical Connectivity Solutions Division; Emerson Network Power.
10. Siemon Co. (The).

B. Cross-Connects and Patch Panels: Modular panels housing multiple-numbered, duplex cable connectors.
1. Number of Connectors per Field: One for each fiber of cable or cables assigned to field, plus spares and blank positions adequate to suit specified expansion criteria.

C. Patch Cords: Factory-made, dual-fiber cables in 36 inch lengths.

D. Cable Connecting Hardware:
1. Comply with Optical Fiber Connector Intermateability Standards (FOCIS) specifications of TIA/EIA-604-2, TIA/EIA-604-3-A, and TIA/EIA-604-12. Comply with TIA/EIA-568-B.3.
2. Quick-connect, simplex and duplex, Type SC, Type ST, Type LC or Type MT-RJ connectors. Insertion loss not more than 0.75 dB.
3. Type SFF connectors may be used in termination racks, panels, and equipment packages.
4. Single mode LED or Laser optimized for 9 micron fiber.

2.9 GROUNDING

A. Comply with requirements in Division 26 Section 0526, for grounding conductors and connectors.

B. Comply with ANSI-J-STD-607-A.

2.10 IDENTIFICATION PRODUCTS

A. Comply with TIA/EIA-606-A and UL 969 for a system of labeling materials, including label stocks, laminating adhesives, and inks used by label printers.

2.11 SOURCE QUALITY CONTROL

A. Testing Agency: Engage a qualified testing agency to evaluate cables.

B. Factory test UTP and optical fiber cables on reels according to TIA/EIA-568-B.1.

C. Factory test UTP cables according to TIA/EIA-568-B.2.

D. Factory test multimode optical fiber cables according to TIA/E1A-526-14-A and TIA/EIA-568-B.3

E. Factory-sweep test coaxial cables at frequencies from 5 MHz to 1 GHz. Sweep test shall test the frequency response or attenuation over frequency, of a cable by generating a voltage whose frequency is varied through the specified frequency range and graphing the results.

F. Cable will be considered defective if it does not pass tests and inspections.

G. Prepare test and inspection reports.

PART 3 - EXECUTION

3.1 ENTRANCE FACILITIES

A. Coordinate backbone cabling with the protectors and demarcation point provided by communications service provider.

3.2 WIRING METHODS

A. Wiring Method: Install cables in raceways and cable trays except within consoles, cabinets, desks, and counters and except in accessible ceiling spaces, in attics, and in gypsum board partitions where unenclosed wiring method may be used. Conceal raceway and cables except in unfinished spaces. Loose cabling from power chords, monitor chords, etc. shall be neatly organized using spiral wrap, zip tie, Velcro or similar means.
   1. Install plenum cable in environmental air spaces, including plenum ceilings.
   2. Comply with requirements for raceways and boxes specified in Division 26 Section 0533.

B. Wiring Method: Conceal conductors and cables in accessible ceilings, walls, and floors where possible.

C. Wiring within Enclosures: Bundle, lace, and train cables within enclosures neatly. Connect to terminal points with no excess and without exceeding manufacturer's limitations on bending radii. Provide and use lacing bars and distribution spools.

3.3 INSTALLATION OF PATHWAYS

A. Cable Trays: Comply with NEMA VE 2 and TIA/EIA-569-A.

B. Drawings indicate general arrangement of pathways and fittings.

C. Comply with TIA/EIA-569-A for pull-box sizing and length of conduit and number of bends between pull points.

D. Comply with requirements in Division 26 Section 0533, for installation of conduits and wireways.

E. Install manufactured conduit sweeps and long-radius elbows whenever possible.

F. Pathway Installation in Communications Equipment Rooms:
   1. Position conduit ends adjacent to a corner on backboard where a single piece of plywood is installed, or in the corner of room where multiple sheets of plywood are installed around perimeter walls of room.
   2. Install cable trays to route cables if conduits cannot be located in these positions.
   3. Secure conduits to backboard when entering room from overhead.
   4. Extend conduits 3 inches above finished floor.
   5. Install metal conduits with grounding bushings and connect with grounding conductor to grounding system.

G. Backboards: Install backboards with 96 inch dimension vertical. Butt adjacent sheets tightly, and form smooth gap-free corners and joints.

H. Backboard maybe cut as necessary to mount devices. Fire rating and manufacturer label must be retained.

I. Do not paint over manufacturer label.

3.4 INSTALLATION OF CABLES

A. Comply with NECA 1.

B. General Requirements for Cabling:
   1. Comply with TIA/EIA-568-B.1.
   2. Comply with BICSI ITSIM, Ch. 6, “Cable Termination Practices”.
   3. Install 110-style IDC termination hardware unless otherwise indicated.

4. Terminate all conductors; no cable shall contain unterminated elements. Make terminations only at indicated outlets, terminals, cross-connects, and patch panels.
5. Cables may not be spliced. Secure and support cables at intervals not exceeding 30 inches and not more than 6 inches from cabinets, boxes, fittings, outlets, racks, frames, and terminals.
6. Install lacing bars to restrain cables, to prevent straining connections, and to prevent bending cables to smaller radii than minimums recommended by manufacturer.
7. Bundle, lace, and train conductors to terminal points without exceeding manufacturer's limitations on bending radii, but not less than radii specified in BICSI ITSIM, “Cabling Termination Practices”, Chapter. Use lacing bars and distribution spools.
8. Do not install bruised, kinked, scored, deformed, or abraded cable. Do not splice cable between termination, tap, or junction points. Remove and discard cable if damaged during installation and replace it with new cable.
9. Cold-Weather Installation: Bring cable to room temperature before dereeling. Heat lamps shall not be used for heating.
10. In the communications equipment room, install a 10 foot long service loop on each end of cable.
11. Pulling Cable: Comply with BICSI ITSIM, Ch. 4, “Pulling Cable”. Monitor cable pull tensions.

C. UTP/STP Cable Installation:
1. Comply with TIA/EIA-568-B.2.
2. Do not untwist UTP cables more than 1/2 inch from the point of termination to maintain cable geometry.

D. Open-Cable Installation:
1. Install cabling with horizontal and vertical cable guides in telecommunications spaces with terminating hardware and interconnection equipment.
2. Suspend UTP cable not in a wireway or pathway, a minimum of 8 inches above ceilings by cable supports not more than 60 inches apart.
3. Cable shall not be run through structural members or in contact with pipes, ducts, or other potentially damaging items.

E. Installation of Cable Routed Exposed under Raised Floors:
1. Install plenum-rated cable only.
2. Install cabling after the flooring system has been installed in raised floor areas.
3. For cable exceeding 6 feet long, Coil slack below each feed point, preferably in the floor. Coil shall be no less than 12 inches in diameter and neatly secured using a zip tie or equivalent.

F. Group connecting hardware for cables into separate logical fields.

G. Separation from EMI Sources:

1. Comply with BICSI TDMM and TIA/EIA-569-A recommendations for separating unshielded copper voice and data communication cable from potential EMI sources, including electrical power lines and equipment.
2. Separation between open communications cables or cables in nonmetallic raceways and unshielded power conductors and electrical equipment shall be as follows:
   a. Electrical Equipment Rating up to 5 kVA: A minimum of 6 inches.
   b. Electrical Equipment Rating More Than 5 kVA: A minimum of 12 inches.
3. Separation between communications cables in grounded metallic raceways and unshielded power lines or electrical equipment shall be as follows:
   a. Electrical Equipment Rating up to 5 kVA: A minimum of 6 inches.
   b. Electrical Equipment Rating More Than 5 kVA: A minimum of 12 inches.
4. Separation between communications cables in grounded metallic raceways and power lines and electrical equipment located in grounded metallic conduits or enclosures shall be as follows:
   a. Electrical Equipment Rating up to 5 kVA: No requirement.
   b. Electrical Equipment Rating More Than 5 kVA: A minimum of 6 inches.
5. Separation between Communications Cables and Electrical Motors and Transformers, 5 kVA or HP and Larger: A minimum of 48 inches.
6. Separation between Communications Cables and Fluorescent Fixtures: A minimum of 6 inches.

3.5 FIRESTOPPING

A. Comply with TIA/EIA-569-A, Annex A, “Firestopping”.

B. Comply with BICSI TDMM, “Firestopping Systems”, Article.

3.6 GROUNDING

A. Install grounding according to BICSI TDMM, “Grounding, Bonding, and Electrical Protection”, Chapter.

B. Comply with ANSI-J-STD-607-A.

C. Locate grounding bus bar to minimize the length of bonding conductors. Fasten to wall allowing at least 2 inch clearance behind the grounding bus bar. Connect grounding bus bar with a minimum No. 2 AWG grounding electrode conductor from grounding bus bar to suitable electrical building ground.

D. Bond metallic equipment to the grounding bus bar, using not smaller than No. 6 AWG equipment grounding conductor.

3.7 IDENTIFICATION

A. Identify system components, wiring, and cabling complying with TIA/EIA-606-A. Comply with requirements for identification specified in Division 26 Section 0553.
   1. Administration Class: 1.
   2. Color-code cross-connect fields and apply colors to voice and data service backboards, connections, covers, and labels.

B. For fire-resistant plywood, do not paint over manufacturer's label.

C. Paint and label colors for equipment identification shall comply with TIA/EIA-606-A for Class 2 level of administration including optional identification requirements of this standard.

D. Cable Schedule: Install in a prominent location in each equipment room and wiring closet. List incoming and outgoing cables and their designations, origins, and destinations. Protect with rigid frame and clear plastic cover. Furnish an electronic copy of final comprehensive schedules for Project.

E. Cable and Wire Identification:
   1. Label each cable within 4 inches of each termination and tap, where it is accessible in a cabinet or junction or outlet box, and elsewhere as indicated.
   2. Each wire connected to building-mounted devices is not required to be numbered at device if color of wire is consistent with associated wire connected and numbered within panel or cabinet.
   3. Exposed Cables and Cables in Cable Trays and Wire Troughs: Label each cable at intervals not exceeding 15 feet.
   4. Label each terminal strip and screw terminal in each cabinet, rack, or panel.
      a. Individually number the wiring conductors connected to terminal strips and identify each cable or wiring group being extended from a panel or cabinet to a building-mounted device with name and number of particular device as shown.
      b. Label each unit and field within distribution racks and frames.
   5. Identification within Connector Fields in Equipment Rooms and Wiring Closets: Label each connector and each discrete unit of cable-terminating and connecting hardware. Where similar jacks and plugs are used for both voice and data communication cabling, use a different color for jacks and plugs of each service.

F. Labels shall be preprinted or computer-printed type with printing area and font color that contrasts with cable jacket color but still complies with requirements in TIA/EIA 606-A, for the following:
   1. Cables use flexible vinyl or polyester that flexes as cables are bent.

3.8 FIELD QUALITY CONTROL

A. Verifications:

1. Visually verify UTP/STP jacket materials for NRTL certification markings. Verify cabling terminations in communications equipment rooms for compliance with color-coding for pin assignments, and verify cabling connections for compliance with TIA/EIA-568-B.1.
2. Visually verify cable placement, cable termination, grounding and bonding, equipment and patch cords, and labeling of all components.

END OF SECTION 27 1300

SECTION 37-15000 COMMUNICATIONS HORIZONTAL CABLING

PART 1 - GENERAL

1.1 SUMMARY

A. Section Includes:
1. Pathways.
2. UTP cabling.
3. STP cabling.
4. Fiber Optic cabling.
5. RG-6 Coaxial cable.
6. Multiuser telecommunications outlet assemblies.
7. Cable connecting hardware, patch panels, and cross-connects.
8. Telecommunications outlet/connectors.
9. Cabling system identification products.

B. Related Sections:
1. Division 27 Section 1300 – COMMUNICATIONS BACKBONE CABLING for voice and data cabling associated with system panels and devices.

1.2 DEFINITIONS

A. Basket Cable Tray: A fabricated structure consisting of wire mesh bottom and side rails.

B. BICSI: Building Industry Consulting Service International.

C. Channel Cable Tray: A fabricated structure consisting of a one-piece, ventilated-bottom or solid-bottom channel.

D. Consolidation Point: A location for interconnection between horizontal cables extending from building pathways and horizontal cables extending into furniture pathways.

E. Cross-Connect: A facility enabling the termination of cable elements and their interconnection or cross-connection.

F. EMI: Electromagnetic interference.

G. IDC: Insulation displacement connector.

H. Ladder Cable Tray: A fabricated structure consisting of two longitudinal side rails connected by individual transverse members (rungs).

I. LAN: Local area network.

J. MUTOA: Multiuser telecommunications outlet assembly, a grouping in one location of several telecommunications outlet/connectors.

K. Outlet/Connectors: A connecting device in the work area on which horizontal cable or outlet cable terminates.

L. Solid-Bottom or Nonventilated Cable Tray: A fabricated structure consisting of longitudinal side rails and a bottom without ventilation openings.

M. Trough or Ventilated Cable Tray: A fabricated structure consisting of longitudinal side rails and a bottom having openings for the passage of air.

N. UTP: Unshielded twisted pair.

O. STP: Shielded twisted pair.

1.3 HORIZONTAL CABLING DESCRIPTION

A. Horizontal cable and its connecting hardware provide the means of transporting signals between the telecommunications outlet/connector and the horizontal cross-connect located in the communications equipment room. This cabling and its connecting hardware are called “permanent link”, a term that is used in the testing protocols.
   1. TIA/EIA-568-B.1 requires that a minimum of two telecommunications outlet/connectors be installed for each work area.
   2. Horizontal cabling shall contain no more that one transition point or consolidation point between the horizontal cross-connect and the telecommunications outlet/connector.
   3. Bridged taps and splices shall not be installed in the horizontal cabling.
   4. Splitters shall not be installed as part of the optical fiber cabling.

B. A work area is approximately 100 sq. ft., and includes the components that extend from the telecommunications outlet/connectors to the station equipment.

C. The maximum allowable horizontal cable length is 295 feet. This maximum allowable length does not include an allowance for the length of 16 feet to the workstation equipment. The maximum allowable length does not include an allowance for the length of 16 feet in the horizontal cross-connect.

1.4 PERFORMANCE REQUIREMENTS

A. General Performance: Horizontal cabling system shall comply with transmission standards in TIA/EIA-568-B.1, when tested according to test procedures of this standard.

1.5 QUALITY ASSURANCE

A. Electrical Components, Devices, and Accessories: Listed and labeled as defined in NFPA 70, by a qualified testing agency, and marked for intended location and application.

B. Telecommunications Pathways and Spaces: Comply with TIA/EIA-569-A.

C. Grounding: Comply with ANSI-J-STD-607-A.

1.6 PROJECT CONDITIONS

A. Environmental Limitations: Do not deliver or install cables and connecting materials until wet work in spaces is complete and dry, and temporary HVAC system is operating and maintaining ambient temperature and humidity conditions at occupancy levels during the remainder of the construction period.

1.7 COORDINATION

A. Coordinate layout and installation of telecommunications pathways and cabling with Owner's telecommunications and LAN equipment and service suppliers.

B. Coordinate telecommunications outlet/connector locations with location of power receptacles at each work area.

PART 2 - PRODUCTS

2.1 PATHWAYS

A. General Requirements: Comply with TIA/EIA-569-A.

B. Cable Support: NRTL labeled for support of Category 6 cabling, designed to prevent degradation of cable performance and pinch points that could damage cable.
   1. Support brackets with cable tie slots for fastening cable ties to brackets.
   2. Lacing bars, spools, J-hooks, and D-rings.
   3. Straps and other devices.

C. Cable Trays:
   1. Available Manufacturers: Subject to compliance with requirements, provide products by one of the following available manufacturers offering products that may be incorporated into the Work include, but are not limited to, the following:
      a. Cable Management Solutions, Inc.
      b. Cablofil Inc.
      c. Cooper B-Line, Inc.
      d. Cope - Tyco/Allied Tube & Conduit.

e. GS Metals Corp.

2. Cable Tray Materials: Metal, suitable for indoors, and protected against corrosion by hot-dip galvanizing, complying with ASTM A 123/A 123M, Grade 0.55, not less than 0.002165 inch thick.
   a. Basket Cable Trays: 6 inches wide and 2 inches deep. Wire mesh spacing shall not exceed 2 by 4 inches.
   b. Trough Cable Trays: Nominally 6 inches wide.
   c. Ladder Cable Trays: Nominally 18 inches wide, and a rung spacing of 12 inches.
   d. Channel Cable Trays: One-piece construction, nominally 4 inches wide. Slot spacing shall not exceed 4 and 1/2 inches o.c.
   e. Solid-Bottom Cable Trays: One-piece construction, nominally 12 inches wide. Provide with solid covers.

D. Conduit and Boxes: Comply with requirements in Division 26 Section “Raceway and Boxes for Electrical Systems”.
   1. Outlet boxes shall be no smaller than 2 inches wide, 3 inches high, and 2 and 1/2 inches deep.

2.2 BACKBOARDS

A. Backboards: Plywood, fire-retardant treated, 3/4 by 48 by 96 inches.

2.3 UTP CABLE

A. Description: 100 ohm, 4 pair UTP, formed into 25 pair, binder groups covered with a blue thermoplastic jacket.
   1. Comply with ICEA S-90-661 for mechanical properties.
   2. Comply with TIA/EIA-568-B.1 for performance specifications.
   3. Comply with TIA/EIA-568-B.2, Category 6.
   4. Listed and labeled by an NRTL acceptable to authorities having jurisdiction as complying with UL 444 and NFPA 70 for the following types:
      a. Communications, General Purpose: Type CM, MP, MPP, CMP, MPR, or CMR.
      b. Communications, Plenum Rated: Type CMP or MPP, complying with NFPA 262.
      c. Communications, Riser Rated: Type CMR or MPR, complying with UL 1666.
      d. Communications, Limited Purpose: Type CMX.
      e. Multipurpose: Type MP, MPP or MPR.
      f. Multipurpose, Plenum Rated: Type MPP, complying with NFPA 262.
      g. Multipurpose, Riser Rated: Type MPR, complying with UL 1666.

2.4 UTP CABLE HARDWARE

A. Available Manufacturers: Subject to compliance with requirements, provide products by one of the following available manufacturers offering products that may be incorporated into the Work include, but are not limited to, the following:
   1. American Technology Systems Industries, Inc.
   2. Dynacom Corporation.
   3. Hubbell Premise Wiring.
   4. KRONE Incorporated.
   5. Leviton Voice & Data Division.
   6. Molex Premise Networks; a division of Molex, Inc.
   7. Nordex/CDT; a subsidiary of Cable Design Technologies.
   8. Panduit Corp.
   9. Siemon Co. (The).
   10. Tyco Electronics/AMP Netconnect; Tyco International Ltd.

B. General Requirements for Cable Connecting Hardware: Comply with TIA/EIA-568-B.2, IDC type, with modules designed for punch-down caps or tools. Cables shall be terminated with connecting hardware of same category or higher.

C. Connecting Blocks: 110-style IDC for Category 6. Provide blocks for the number of cables terminated on the block, plus 25 percent spare. Integral with connector bodies, including plugs and jacks where indicated.

D. Cross-Connect: Modular array of connecting blocks arranged to terminate building cables and permit interconnection between cables.
   1. Number of Terminals per Field: One for each conductor in assigned cables.

E. Patch Panel: Modular panels housing multiple-numbered jack units with IDC-type connectors at each jack for permanent termination of pair groups of installed cables.
   1. Number of Jacks per Field: One for each four pair UTP cable indicated.

F. Jacks and Jack Assemblies: Modular, color-coded, eight position modular receptacle units with integral IDC-type terminals.

G. Patch Cords: Factory-made, four pair cables in 36 inch lengths; terminated with eight-position modular plug at each end.
   1. Patch cords shall have bend-relief-compliant boots and color-coded icons to ensure Category 6 performance. Patch cords shall have latch guards to protect against snagging.
   2. Patch cords shall have color-coded boots for circuit identification.

2.5 STP CABLE

A. Available Manufacturers: Subject to compliance with requirements, manufacturers offering products that may be incorporated into the Work include, but are not limited to, the following:

1. Alpha.
2. Belden CDT Inc.; Electronics Division.
3. Mohawk; a division of Belden CDT.
4. Hyperline.
5. Commscope.
6. Superior Essex.
7. Berk-Tek.

B. Description: 23 AWG Solid Bare copper insulated conductors, assembled with four tightly twisted pairs with an internal separator, overall foil and drain shield, and overall jacket.
   1. Comply with ISO/IEC11801 CAT 6 cable requirements.
   2. Comply with TIA/EIA-568-B.1CAT 6 for performance specifications.
   3. Comply with TIA/EIA-568-B.2 CAT6.
   4. Listed and labeled by an NRTL acceptable to authorities having jurisdiction as complying with UL 444 and NFPA 70 for the following types:
      a. Communications, Non-Plenum Rated: Type CMR.
      b. Communications, Plenum Rated: Type CMP, complying with NFPA 262.

2.6 STP CABLE HARDWARE

A. Available Manufacturers: Subject to compliance with requirements, manufacturers offering products that may be incorporated into the Work include, but are not limited to, the following:
   1. American Technology Systems Industries, Inc.
   2. Dynacom Corporation.
   3. Hubbell Premise Wiring.
   4. KRONE Incorporated.
   5. Leviton Voice & Data Division.
   6. Molex Premise Networks; a division of Molex, Inc.
   7. Nordex/CDT; a subsidiary of Cable Design Technologies.
   8. Panduit Corp.
   9. Siemon Co. (The).
   10. Tyco Electronics/AMP Netconnect; Tyco International Ltd.

B. General Requirements for Cable Connecting Hardware: Comply with TIA/EIA-568-B.2, IDC type, with modules designed for punch-down caps or tools. Cables shall be terminated with connecting hardware of same category or higher.

C. Connecting Blocks: 110-style IDC for Category 6. Provide blocks for the number of cables terminated on the block, plus 25 percent spare. Integral with connector bodies, including plugs and jacks where indicated.

D. Jacks and Jack Assemblies: Modular, color-coded, eight position modular receptacle units with integral IDC-type terminals.

2.7 OPTICAL FIBER CABLE

A. Available Manufacturers: Subject to compliance with requirements, provide products by one of the following available manufacturers offering products that may be incorporated into the Work include, but are not limited to, the following:
   1. Berk-Tek; a Nexans company.
   2. CommScope, Inc.
   3. Corning Cable Systems.
   4. General Cable Technologies Corporation.
   5. Mohawk; a division of Belden CDT.
   6. Nordex/CDT; a subsidiary of Cable Design Technologies.
   7. Optical Connectivity Solutions Division; Emerson Network Power.
   8. Superior Essex Inc.
   9. SYSTIMAX Solutions; a CommScope, Inc. brand.
   10. 3M.
   11. Tyco Electronics/AMP Netconnect; Tyco International Ltd.

B. Description: Single mode, 9/125 micrometer, 12 fiber, 24 fiber and 48 fiber, tight buffer, optical fiber cable.
   1. Comply with ICEA S-83-596 for mechanical properties.
   2. Comply with ICEA S-87-640 for outside plant.
   3. Comply with TIA/EIA-568-B.3 for performance specifications.
   4. Comply with TIA/EIA-492AAAA-A for detailed specifications.
   5. Listed and labeled by an NRTL acceptable to authorities having jurisdiction as complying with UL 444, UL 1651, and NFPA 70 for the following types:
      a. General Purpose, Nonconductive: Type OFN, OFNR or OFNP.
      b. Plenum Rated, Nonconductive: Type OFNP, complying with NFPA 262.
      c. Riser Rated, Nonconductive: Type OFNR, complying with UL 1666.
      d. General Purpose, Conductive: Type OFC, OFCR or OFCP.
      e. Plenum Rated, Conductive: Type OFCP, complying with NFPA 262.
      f. Riser Rated, Conductive: Type OFCR, complying with UL 1666.
   6. Conductive cable shall be steel armored type.
   7. Maximum Attenuation; 1.5 dB/km at 1,300 nm and 1,550 nm.

C. Jacket:
   1. Jacket Color: Yellow for 9/125 micrometer cable.
   2. Cable cordage jacket, fiber, unit, and group color shall be according to TIA/EIA-598-B.
   3. Imprinted with fiber count, fiber type, and aggregate length at regular intervals not to exceed 40 inches.

D. Description: Multimode, 50/125 micrometer, 12 fiber and 24 fiber, tight buffer, optical fiber cable.
   1. Comply with ICEA S-83-596 for mechanical properties.
   2. Comply with ICEA S-87-640 for outside plant.
   3. Comply with TIA/EIA-568-B.3 for performance specifications.

4. Comply with TIA/EIA-492AAAA-A for detailed specifications.
5. Listed and labeled by an NRTL acceptable to authorities having jurisdiction as complying with UL 444, UL 1651, and NFPA 70 for the following types:
   a. General Purpose, Nonconductive: Type OFN, OFNR or OFNP.
   b. Plenum Rated, Nonconductive: Type OFNP, complying with NFPA 262.
   c. Riser Rated, Nonconductive: Type OFNR, complying with UL 1666.
   d. General Purpose, Conductive: Type OFC, OFCR or OFCP.
   e. Plenum Rated, Conductive: Type OFCP, complying with NFPA 262.
   f. Riser Rated, Conductive: Type OFCR, complying with UL 1666.
6. Conductive cable shall be steel armored type.
7. Maximum Attenuation: 3.50 dB/km at 850 nm; 1.5 dB/km at 1,300 nm.
8. Minimum Modal Bandwidth: 160 MHz-km at 850 nm; 500 MHz-km at 1,300 nm.

E. Jacket:
1. Jacket Color: Orange for 50/125 micrometer cable.
2. Cable cordage jacket, fiber, unit, and group color shall be according to TIA/EIA-598-B.
3. Imprinted with fiber count, fiber type, and aggregate length at regular intervals not to exceed 40 inches.

2.8 OPTICAL FIBER CABLE HARDWARE

A. Available Manufacturers: Subject to compliance with requirements, provide products by one of the following available manufacturers offering products that may be incorporated into the Work include, but are not limited to, the following:
1. ADC.
2. American Technology Systems Industries, Inc.
3. Berk-Tek; a Nexans company.
4. Corning Cable Systems.
5. Dynacom Corporation.
6. Hubbell Premise Wiring.
7. Molex Premise Networks; a division of Molex, Inc.
8. Nordex/CDT; a subsidiary of Cable Design Technologies.
9. Optical Connectivity Solutions Division; Emerson Network Power.
10. Siemon Co. (The).

B. Cross-Connects and Patch Panels: Modular panels housing multiple-numbered, duplex cable connectors.
1. Number of Connectors per Field: One for each fiber of cable or cables assigned to field, plus spares and blank positions adequate to suit specified expansion criteria.

C. Patch Cords: Factory-made, dual-fiber cables in 36 inch lengths.

D. Cable Connecting Hardware:

1. Comply with Optical Fiber Connector Intermateability Standards (FOCIS) specifications of TIA/EIA-604-2, TIA/EIA-604-3-A, and TIA/EIA-604-12. Comply with TIA/EIA-568-B.3.
2. Quick-connect, simplex and duplex, Type SC, Type ST, Type LC or Type MT-RJ connectors. Insertion loss not more than 0.75 dB.
3. Type SFF connectors may be used in termination racks, panels, and equipment packages.
4. Single mode LED or Laser optimized for 9 micron fiber.

2.9 COAXIAL CABLE

A. Available Manufacturers: Subject to compliance with requirements, provide products by one of the following available manufacturers offering products that may be incorporated into the Work include, but are not limited to, the following:
   1. Alpha Wire Company.
   2. Belden CDT Inc.; Electronics Division.
   3. Coleman Cable, Inc.
   4. CommScope, Inc.
   5. Draka USA.

B. Cable Characteristics: Broadband type, recommended by cable manufacturer specifically for broadband data transmission applications. Coaxial cable and accessories shall have 75 ohm nominal impedance with a return loss of 20 dB maximum from 7 to 806 MHz.

C. RG-6/U: NFPA 70, Type CATV or CM.
   1. No. 16 AWG, solid, copper-covered steel conductor; gas-injected, foam-PE insulation.
   2. Double shielded with 100 percent aluminum-foil shield and 60 percent aluminum braid.
   3. Jacketed with black PVC or PE.
   4. Suitable for indoor installations.

D. NFPA and UL compliance, listed and labeled by an NRTL acceptable to authorities having jurisdiction as complying with UL 1655 and with NFPA 70 “Radio and Television Equipment”, and “Community Antenna Television and Radio Distribution”, Articles. Types are as follows:
   1. CATV Cable: Type CATV, CATVP or CATVR.
   2. CATV Plenum Rated: Type CATVP, complying with NFPA 262.
   3. CATV Riser Rated: Type CATVR**;** or CATVP, CATVR, or CATV, complying with UL 1666.
   4. CATV Limited Rating: Type CATVX.

2.10 COAXIAL CABLE HARDWARE

A. Available Manufacturers: Subject to compliance with requirements, provide products by one of the following available manufacturers offering products that may be incorporated into the Work include, but are not limited to, the following:
   1. Aim Electronics; a brand of Emerson Electric Co.
   2. Leviton Voice & Data Division.
   3. Siemon Co. (The).

B. Coaxial-Cable Connectors: Type BNC, 75 ohms.

2.11 CONSOLIDATION POINTS

A. Available Manufacturers: Subject to compliance with requirements, provide products by one of the following available manufacturers offering products that may be incorporated into the Work include, but are not limited to, the following:
   1. American Technology Systems Industries, Inc.
   2. Chatsworth Products, Inc.
   3. Dynacom Corporation.
   4. Hubbell Premise Wiring.
   5. Molex Premise Networks; a division of Molex, Inc.
   6. Nordex/CDT; a subsidiary of Cable Design Technologies.
   7. Ortronics, Inc.
   8. Panduit Corp.
   9. Siemon Co. (The).

B. Description: Consolidation points shall comply with requirements for cable connecting hardware.
   1. Number of Terminals per Field: One for each conductor in assigned cables.
   2. Number of Connectors per Field:
      a. One for each four pair UTP/STP cable indicated.
      b. One for each four pair conductor group of indicated cables, plus 25 percent spare positions.
   3. Mounting: Wall.
   4. NRTL listed as complying with UL 50 and UL 1863.
   5. When installed in plenums used for environmental air, NRTL listed as complying with UL 2043.

2.12 MULTIUSER TELECOMMUNICATIONS OUTLET ASSEMBLY (MUTOA)

A. Available Manufacturers: Subject to compliance with requirements, Subject to compliance with requirements, provide products by one of the following available manufacturers offering products that may be incorporated into the Work include, but are not limited to, the following:
   1. Chatsworth Products, Inc.
   2. Hubbell Premise Wiring.

3. Molex Premise Networks; a division of Molex, Inc.
4. Nordex/CDT; a subsidiary of Cable Design Technologies.
5. Ortronics, Inc.
6. Panduit Corp.
7. Siemon Co. (The).

B. Description: MUTOAs shall meet the requirements for cable connecting hardware.
1. Number of Terminals per Field: One for each conductor in assigned cables.
2. Number of Connectors per Field:
   a. One for each four pair UTP cable indicated.
   b. One for each four pair conductor group of indicated cables, plus 25 percent spare positions.
3. Mounting: Wall.
4. NRTL listed as complying with UL 50 and UL 1863.
5. Label shall include maximum length of work area cords, based on TIA/EIA-568-B.1.
6. When installed in plenums used for environmental air, NRTL listed as complying with UL 2043.

2.13 TELECOMMUNICATIONS OUTLET/CONNECTORS

A. Jacks: 100 ohm, balanced, twisted-pair connector; four pair, eight position modular. Comply with TIA/EIA-568-B.1.

B. Workstation Outlets: Two-port-connector assemblies mounted in multi-gang faceplate.
1. Plastic Faceplate: High-impact plastic. Coordinate color with Division 26 Section 2726.
2. Metal Faceplate: Stainless steel, complying with requirements in Division 26 Section 2726.
3. For use with snap-in jacks accommodating any combination of UTP, optical fiber, and coaxial work area cords.
   a. Flush mounting jacks, positioning the cord at a 45 degree angle.
4. Legend: Factory labeled by silk-screening or engraving for stainless steel faceplates.
5. Legend: Machine printed, in the field, using adhesive-tape label.
6. Legend: Snap-in, clear-label covers and machine-printed paper inserts.

2.14 GROUNDING

A. Comply with requirements in Division 26 Section 0526; for grounding conductors and connectors.

B. Comply with ANSI-J-STD-607-A.

2.15 IDENTIFICATION PRODUCTS

A. Comply with TIA/EIA-606-A and UL 969 for labeling materials, including label stocks, laminating adhesives, and inks used by label printers.

B. Comply with requirements in Division 26 Section 0553.

2.16 SOURCE QUALITY CONTROL

A. Testing Agency: Engage a qualified testing agency to evaluate cables.

B. Factory test UTP/STP and optical fiber cables on reels according to TIA/EIA-568-B.1.

C. Factory test UTP/STP cables according to TIA/EIA-568-B.2.

D. Factory test multimode optical fiber cables according to TIA/EIA-526-14-A and TIA/EIA-568-B.3.

E. Factory-sweep test coaxial cables at frequencies from 5 MHz to 1 GHz. Sweep test shall test the frequency response or attenuation over frequency, of a cable by generating a voltage whose frequency is varied through the specified frequency range and graphing the results.

F. Cable will be considered defective if it does not pass tests and inspections.

G. Prepare test and inspection reports.

PART 3 - EXECUTION

3.1 ENTRANCE FACILITIES

A. Coordinate backbone cabling with the protectors and demarcation point provided by communications service provider.

3.2 WIRING METHODS

A. Wiring Method: Install cables in raceways and cable trays except within consoles, cabinets, desks, and counters and except in accessible ceiling spaces, in attics, and in gypsum board partitions where unenclosed wiring method may be used. Conceal raceway and cables except in unfinished spaces.
   1. Install plenum cable in environmental air spaces, including plenum ceilings.
   2. Comply with requirements for raceways and boxes specified in Division 26 Section “Raceway and Boxes for Electrical Systems”.

B. Wiring Method: Conceal conductors and cables in accessible ceilings, walls, and floors where possible.

C. Wiring within Enclosures: Bundle, lace, and train cables to terminal points with no excess and without exceeding manufacturer's limitations on bending radii. Provide and use lacing bars and distribution spools.

3.3 INSTALLATION OF PATHWAYS

A. Cable Trays: Comply with NEMA VE 2 and TIA/EIA-569-A-7.

B. Comply with requirements for demarcation point, pathways, cabinets, and racks.

C. Comply with TIA/EIA-569-A for pull-box sizing and length of conduit and number of bends between pull points.

D. Comply with requirements in Division 26 Section 0533 for installation of conduits and wireways.

E. Install manufactured conduit sweeps and long-radius elbows whenever possible.

F. Pathway Installation in Communications Equipment Rooms:
   1. Position conduit ends adjacent to a corner on backboard where a single piece of plywood is installed, or in the corner of room where multiple sheets of plywood are installed around perimeter walls of room.
   2. Install cable trays to route cables if conduits cannot be located in these positions.
   3. Secure conduits to backboard when entering room from overhead.
   4. Extend conduits 3 inches above finished floor.
   5. Install metal conduits with grounding bushings and connect with grounding conductor to grounding system.

G. Backboards: Install backboards with 96 inch dimension vertical. Butt adjacent sheets tightly, and form smooth gap-free corners and joints.

H. Backboard maybe cut as necessary to mount devices. Fire rating and manufacturer label must be retained.

I. Do not paint over manufacturer label.

3.4 INSTALLATION OF CABLES

A. Comply with NECA 1.

B. General Requirements for Cabling:
   1. Comply with TIA/EIA-568-B.1.
   2. Comply with BICSI ITSIM, Ch. 6, “Cable Termination Practices”.
   3. Install 110-style IDC termination hardware unless otherwise indicated.

4. MUTOA shall not be used as a cross-connect point.
5. Consolidation points may be used only for making a direct connection to telecommunications outlet/connectors:
   a. Do not use consolidation point as a cross-connect point, as a patch connection, or for direct connection to workstation equipment.
   b. Locate consolidation points for UTP at least 49 feet from communications equipment room.
6. Terminate conductors; no cable shall contain unterminated elements. Make terminations only at indicated outlets, terminals, cross-connects, and patch panels.
7. Cables may not be spliced. Secure and support cables at intervals not exceeding 30 inches and not more than 6 inches from cabinets, boxes, fittings, outlets, racks, frames, and terminals.
8. Install lacing bars to restrain cables, to prevent straining connections, and to prevent bending cables to smaller radii than minimums recommended by manufacturer.
9. Bundle, lace, and train conductors to terminal points without exceeding manufacturer's limitations on bending radii, but not less than radii specified in BICSI ITSIM, “Cabling Termination Practices” Chapter. Install lacing bars and distribution spools.
10. Do not install bruised, kinked, scored, deformed, or abraded cable. Do not splice cable between termination, tap, or junction points. Remove and discard cable if damaged during installation and replace it with new cable.
11. Cold Weather Installation: Bring cable to room temperature before dereeling. Heat lamps shall not be used for heating.
12. In the communications equipment room, install a 10 foot long service loop on each end of cable.
13. Pulling Cable: Comply with BICSI ITSIM, Ch. 4, “Pulling Cable”. Monitor cable pull tensions.

C. UTP Cable Installation:
   1. Comply with TIA/EIA-568-B.2.
   2. Do not untwist UTP cables more than 1/2 inch from the point of termination to maintain cable geometry.

D. Optical Fiber Cable Installation:
   1. Comply with TIA/EIA-568-B.3.
   2. Cable may be terminated on connecting hardware that is rack or cabinet mounted.

E. Open-Cable Installation:
   1. Install cabling with horizontal and vertical cable guides in telecommunications spaces with terminating hardware and interconnection equipment.
   2. Suspend UTP cable not in a wireway or pathway a minimum of 8 inches above ceilings by cable supports not more than 60 inches apart.
   3. Cable shall not be run through structural members or in contact with pipes, ducts, or other potentially damaging items.

F. Installation of Cable Routed Exposed under Raised Floors:

1. Install plenum-rated cable only.
2. Install cabling after the flooring system has been installed in raised floor areas.
3. For cable exceeding 6 feet long, Coil slack below each feed point, preferably in the floor. Coil shall be no less than 12 inches in diameter and neatly secured using a zip tie or equivalent.

G. Outdoor Coaxial Cable Installation:
1. Install outdoor connections in enclosures complying with NEMA 250, Type 4X. Install corrosion-resistant connectors with properly designed O-rings to keep out moisture.
2. Attach antenna lead-in cable to support structure at intervals not exceeding 36 inches.

H. Group connecting hardware for cables into separate logical fields.

I. Separation from EMI Sources:
1. Comply with BICSI TDMM and TIA/EIA-569-A recommendations for separating unshielded copper voice and data communication cable from potential EMI sources, including electrical power lines and equipment.
2. Separation between open communications cables or cables in nonmetallic raceways and unshielded power conductors and electrical equipment shall be as follows:
   a. Electrical Equipment Rating up to 5 kVA: A minimum of 6 inches.
   b. Electrical Equipment Rating More Than 5 kVA: A minimum of 12 inches.
3. Separation between communications cables in grounded metallic raceways and unshielded power lines or electrical equipment shall be as follows:
   a. Electrical Equipment Rating up to 5 kVA: A minimum of 6 inches.
   b. Electrical Equipment Rating More Than 5 kVA: A minimum of 12 inches.
4. Separation between communications cables in grounded metallic raceways and power lines and electrical equipment located in grounded metallic conduits or enclosures shall be as follows:
   a. Electrical Equipment Rating up to 5 kVA: No requirement.
   b. Electrical Equipment Rating More Than 5 kVA: A minimum of 6 inches.
5. Separation between Communications Cables and Electrical Motors and Transformers, 5 kVA or HP and Larger: A minimum of 48 inches.
6. Separation between Communications Cables and Fluorescent Fixtures: A minimum of 6 inches.

3.5 FIRESTOPPING

A. Comply with TIA/EIA-569-A, Annex A, “Firestopping”.

B. Comply with BICSI TDMM, “Firestopping Systems”, Article.

3.6 GROUNDING

A. Install grounding according to BICSI TDMM, “Grounding, Bonding, and Electrical Protection”, Chapter.

B. Comply with ANSI-J-STD-607-A.

C. Locate grounding bus bar to minimize the length of bonding conductors. Fasten to wall allowing at least 2 inch clearance behind the grounding bus bar. Connect grounding bus bar with a minimum No. 4 AWG grounding electrode conductor from grounding bus bar to suitable electrical building ground.

D. Bond metallic equipment to the grounding bus bar, using not smaller than No. 6 AWG equipment grounding conductor.

3.7 IDENTIFICATION

A. Identify system components, wiring, and cabling complying with TIA/EIA-606-A. Comply with requirements for identification specified in Division 26 Section 0553.
   1. Administration Class: 4.
   2. Color-code cross-connect fields. Apply colors to voice and data service backboards, connections, covers, and labels.

B. For fire-resistant plywood, do not paint over manufacturer’s label.

C. Paint and label colors for equipment identification shall comply with TIA/EIA-606-A for Class 4 level of administration, including optional identification requirements of this standard.

D. Cable Schedule: Post in prominent location in each equipment room and wiring closet. List incoming and outgoing cables and their designations, origins, and destinations. Protect with rigid frame and clear plastic cover. Furnish an electronic copy of final comprehensive schedules for Project.

E. Cable and Wire Identification:
   1. Label each cable within 4 inches of each termination and tap, where it is accessible in a cabinet or junction or outlet box, and elsewhere as indicated.
   2. Each wire connected to building-mounted devices is not required to be numbered at device if color of wire is consistent with associated wire connected and numbered within panel or cabinet.
   3. Exposed Cables and Cables in Cable Trays and Wire Troughs: Label each cable at intervals not exceeding 15 feet.
   4. Label each terminal strip and screw terminal in each cabinet, rack, or panel.
      a. Individually number wiring conductors connected to terminal strips, and identify each cable or wiring group being extended from a panel or cabinet to a building-mounted device shall be identified with name and number of particular device as shown.

b. Label each unit and field within distribution racks and frames.

5. Identification within Connector Fields in Equipment Rooms and Wiring Closets: Label each connector and each discrete unit of cable-terminating and connecting hardware. Where similar jacks and plugs are used for both voice and data communication cabling, use a different color for jacks and plugs of each service.
6. Uniquely identify and label work area cables extending from the MUTOA to the work area. These cables may not exceed the length stated on the MUTOA label.

F. Labels shall be preprinted or computer-printed type with printing area and font color that contrasts with cable jacket color but still complies with requirements in TIA/EIA-606-A.
   1. Cables use flexible vinyl or polyester that flex as cables are bent.

END OF SECTION 27 1500

SECTION 31 0501 - COMMON EARTHWORK REQUIREMENTS

PART 1 - GENERAL

1.1 SUMMARY

A. Includes But Not Limited to:
   1. General procedures and requirements for earthwork.

PART 2 - PRODUCTS: Not Used

PART 3 - EXECUTION

3.1 EXAMINATION

A. Site Verification of Conditions:
   1. 48 hours minimum before performing any work on site, contact locate company to arrange for utility location services. Some public utilities use a centralized utility locator agency, often referred to as “U Dig”. Provide a copy of the submitted request and the utilities’ acknowledgement of the request.
   2. Subgrade scans provided by a professional scanning service are also required. Subgrade scans shall include the following technologies: 1) active radiofrequency generation on metallic lines or cables, 2) passive radiofrequency monitoring, 3) ground penetrating radar and 4) metal detection.
   3. Perform minor, investigative excavations to verify location of various existing underground facilities at sufficient locations to assure that no conflict with the proposed work exists and sufficient clearance is available to avoid damage to existing facilities.
   4. Upon discovery of conflicts or problems with existing facilities, notify Owner by phone or fax within 24 hours. Follow telephone or fax notification with letter and diagrams indicating conflict or problem and sufficient measurements and details to evaluate problem.

3.2 PREPARATION

A. Protection:
   1. Spillage:
      a. Avoid spillage by covering and securing loads when hauling on or adjacent to public streets or highways.
      b. Remove spillage and sweep, wash, or otherwise clean project, streets, and highways.
   2. Dust Control:

a. Take precautions necessary to prevent dust nuisance, both on-site and adjacent to public and private properties.
b. Correct or repair damage caused by dust.

3. Existing Plants and Features: Do not damage tops, trunks, and roots of existing trees and shrubs on site that are intended to remain. Do not use heavy equipment within branch spread. Interfering branches may be removed only with permission of Owner. Do not damage other plants and features that are to remain.

B. If specified precautions are not taken or corrections and repairs not made promptly, Owner may take such steps as may be deemed necessary and deduct costs of such from monies due to Contractor. Such action or lack of action on Owner's part does not relieve Contractor from responsibility for proper protection of The Work. Any fines resulting from failure to allow specified precautions or effect repairs shall be the sole responsibility of the contractor.

3.3 REPAIR / RESTORATION

A. Adjust existing covers, boxes, and vaults to grade.

B. Replace broken or damaged covers, boxes, and vaults.

C. Independently confirm size, location, and number of covers, boxes, and vaults that require adjustment.

3.4 FIELD QUALITY CONTROL

A. Notify Owner 24 hours before performing excavation or fill work.

B. If weather, scheduling, or any other circumstance has interrupted work, notify the Owner 24 hours minimum, before intended resumption of grading or compacting.

C. Owner reserves right to require additional testing to re-affirm suitability of completed work including compacted soils that have been exposed to adverse weather conditions.

END OF SECTION 31 0501

SECTION 31 1000 - SITE CLEARING

PART 1 - GENERAL

1.1 SUMMARY

A. This Section includes the following:
   1. Protecting existing trees, shrubs, groundcovers, plants, and/or grass to remain.
   2. Removing existing trees shrubs groundcovers plants and/or grass.
   3. Clearing and grubbing.
   4. Stripping and stockpiling topsoil.
   5. Removing above and below grade site improvements.
   6. Disconnecting and capping or sealing site utilities.
   7. Temporary erosion and sedimentation control measures.

1.2 MATERIAL OWNERSHIP

A. Except for stripped topsoil or other materials indicated to remain Owner's property, cleared materials shall become Contractor's property and shall be removed from Project site.

1.3 PROJECT CONDITIONS

A. Traffic: Minimize interference with adjoining roads, streets, walks, and other adjacent occupied or used facilities during site-clearing operations.
   1. Do not close or obstruct streets, walks, or other adjacent occupied or used facilities without permission from Owner and authorities having jurisdiction.
   2. Provide alternate routes around closed or obstructed traffic ways if required by authorities having jurisdiction.

B. Salvable Improvements: Carefully remove items indicated to be salvaged and store on Owner's premises where indicated.

C. Utility Locator Service: Notify utility locator service for area where Project is located before site clearing.

D. Do not commence site clearing operations until temporary erosion and sedimentation control measures are in place.

PART 2 - EXECUTION

2.1 PREPARATION

A. Protect and maintain benchmarks and survey control points from disturbance during construction.

B. Locate and clearly flag trees and vegetation to remain or to be relocated.

C. Protect existing site improvements to remain from damage during construction.
   1. Restore damaged improvements to their original condition, as acceptable to Owner.

2.2 TEMPORARY EROSION AND SEDIMENTATION CONTROL

A. Provide temporary erosion and sedimentation control measures to prevent soil erosion and discharge of soil-bearing water runoff or airborne dust to adjacent properties and walkways, according to requirements of authorities having jurisdiction.

B. Inspect, repair, and maintain erosion and sedimentation control measures during construction until permanent vegetation has been established.

C. Remove erosion and sedimentation controls and restore and stabilize areas disturbed during removal.

2.3 TREE PROTECTION

A. Erect and maintain temporary fencing around tree protection zones before starting site clearing. Remove fence when construction is complete.

B. Do not excavate within tree protection zones, unless otherwise indicated.

C. Repair or replace trees and vegetation indicated to remain that are damaged by construction operations, in a manner approved by Owner.

2.4 UTILITIES

A. Locate, identify, disconnect, and seal or cap off utilities indicated to be removed.
   1. Arrange with utility companies to shut off indicated utilities.

B. Existing Utilities: Do not interrupt utilities serving facilities occupied by Owner or others unless permitted under the following conditions and then only after arranging to provide temporary utility services according to requirements indicated:
   1. Notify Owner not less than two days in advance of proposed utility interruptions.
   2. Do not proceed with utility interruptions without Architect's written permission.

C. Removal of underground utilities is included in Division 26 and Division 27, Sections covering site utilities.

2.5 CLEARING AND GRUBBING

A. Fill depressions caused by clearing and grubbing operations with satisfactory soil material unless further excavation or earthwork is indicated.
   1. Place fill material in horizontal layers not exceeding a loose depth of 8 inches, and compact each layer to a density equal to adjacent original ground.

2.6 TOPSOIL STRIPPING

A. Remove sod and grass before stripping topsoil.

B. Strip topsoil to whatever depths are encountered in a manner to prevent intermingling with underlying subsoil or other waste materials.

C. Stockpile topsoil materials away from edge of excavations without intermixing with subsoil. Grade and shape stockpiles to drain surface water. Cover to prevent windblown dust.

D. Topsoil in excess of that required for landscape areas shall become the property of the Contractor and shall be removed from site.

2.7 SITE IMPROVEMENTS

A. Remove existing above and below grade improvements as indicated and as necessary to facilitate new construction.

2.8 DISPOSAL

A. Disposal: Remove surplus soil material, unsuitable topsoil, obstructions, demolished materials, and waste materials including trash and debris, and legally dispose of them off Owner's property.

END OF SECTION 31 1000

SECTION 31 2213 - ROUGH GRADING

PART 1 - GENERAL

1.1 SUMMARY

A. Includes But Not Limited To:
   1. Perform rough grading work required to prepare site for construction as described in Contract Documents.

B. Related Sections:
   1. Section 31 0501: Common Earthwork Requirements.

PART 2 - PRODUCTS

2.1 MATERIALS

A. Materials used for fill shall be as specified for backfill in Section 31 2323 Fill.

PART 3 - EXECUTION

3.1 PREPARATION

A. Identify benchmark to be used in establishing grades and review Contract Document requirements for grades, fill materials, and topsoil.

B. Examine site to pre-plan procedures for making cuts, placing fills, and other necessary work.

3.2 PERFORMANCE

A. Site Tolerances:
   1. Maximum variation from required grades shall be 1/10 of one foot.

B. Compact fills as specified in Section 31 2323 Fill.

C. If soft spots, water, or other unusual and unforeseen conditions affecting grading requirements are encountered, stop work and notify Owner.

END OF SECTION 31 2213

SECTION 31 2316 - EXCAVATION

PART 1 - GENERAL

1.1 SUMMARY

A. Includes But Not Limited To:
   1. Perform Project excavating and trenching as described in Contract Documents, except as specified below.
   2. Procedure and quality for excavating and trenching performed on Project under other Sections unless specifically specified otherwise.

B. Related Sections:
   1. Section 31 0501: Common Earthwork Requirements.
   2. Performance of excavating inside and outside of building required for electrical and mechanical work is responsibility of respective Section doing work unless arranged differently by Contractor.

PART 2 - PRODUCTS: Not Used.

PART 3 - EXECUTION

3.1 EXAMINATION

A. Carefully examine site and available information to determine type soil to be encountered. Discuss problems with Owner's Representative before proceeding with work.

3.2 PREPARATION

A. Protection of Existing Utilities:
   1. Protect existing utilities identified in Contract Documents during excavation.
   2. If existing utility lines not identified in Contract Documents are encountered, contact Owner's Representative before proceeding.

3.3 PERFORMANCE

A. Excavation:
   1. All excavations shall be done in accordance with OSHA for Class C-60 soils.
      a. Excavate as necessary for proper placement and forming of footings and foundations.

b. Bottom of excavations to receive footings shall be undisturbed soil.
c. Excavation Carried Deeper Than Required:
1) Under Footings: Fill with concrete specified for footings.
2) Under Slabs: Use specified compacted backfill material.

2. Pavement And Miscellaneous Cast-In-Place Concrete:
a. Excavate as necessary for proper placement and forming of concrete site elements and pavement structure. Remove vegetation and deleterious material and remove from site.
b. Backfill over-excavated areas with compacted base material specified in Section 31 2323.
c. Remove and replace exposed material that becomes soft or unstable.

3. Utility Trenches:
a. Unless otherwise indicated, excavation shall be open cut. Short sections of trench may be tunneled if pipe or duct can be safely and properly installed and backfill can be properly tamped in tunnel sections and if approved by Owner's Representative.
b. Excavate to proper alignment, depth, and grade. Excavate to sufficient width to allow adequate space for proper installation and inspection of utility piping.
c. If trenches are excavated deeper than required, backfill until trench bottom is proper depth with properly compacted native material.
d. Pipes shall be bedded as shown on drawings.

4. If unusual excavating conditions are encountered, stop work and notify Owner's Representative.

3.4 REPAIR / RESTORATION

A. Repair damage to other portions of the Work resulting from work of this Section at no additional cost to Owner. On new work, arrange for damage to be repaired by original installer.

3.5 CLEANING

A. Debris and material not necessary for Project are property of Contractor and are to be removed before completion of Project. However, if material necessary for Project is hauled away, replace with specified fill / backfill material.

END OF SECTION 31 2316

SECTION 312319 - DEWATERING

PART 1 - GENERAL

1.1 SUMMARY

A. Section includes construction dewatering.

PART 2 - PRODUCTS

2.1 PERFORMANCE REQUIREMENTS

A. Dewatering Performance: Design, furnish, install, test, operate, monitor, and maintain dewatering system of sufficient scope, size, and capacity to control hydrostatic pressures and to lower, control, remove, and dispose of ground water and permit excavation and construction to proceed on dry, stable subgrades.

PART 3 - EXECUTION

3.1 PREPARATION

A. Provide temporary grading to facilitate dewatering and control of surface water.

B. Protect and maintain temporary erosion and sedimentation controls, which are specified in Section 311000 "Site Clearing," during dewatering operations.

3.2 INSTALLATION

A. Install dewatering system utilizing wells, well points, or similar methods complete with pump equipment, standby power and pumps, filter material gradation, valves, appurtenances, water disposal, and surface-water controls.

1. Space well points or wells at intervals required to provide sufficient dewatering.
2. Use filters or other means to prevent pumping of fine sands or silts from the subsurface.

B. Place dewatering system into operation to lower water to specified levels before excavating below ground-water level.

C. Provide standby equipment on-site, installed and available for immediate operation, to maintain dewatering on continuous basis if any part of system becomes inadequate or fails.

3.3 OPERATION

A. Operate system continuously until drains, sewers, and structures have been constructed and fill materials have been placed or until dewatering is no longer required.

B. Operate system to lower and control ground water to permit excavation, construction of structures, and placement of fill materials on dry subgrades. Drain water-bearing strata above and below bottom of foundations, drains, sewers, and other excavations.

1. Do not permit open-sump pumping that leads to loss of fines, soil piping, subgrade softening, and slope instability.
2. Reduce hydrostatic head in water-bearing strata below subgrade elevations of foundations, drains, sewers, and other excavations.
3. Maintain piezometric water level a minimum of 24 inches below bottom of excavation.

C. Remove dewatering system from Project site on completion of dewatering. Plug or fill well holes with sand or cut off and cap wells a minimum of 36 inches (900 mm) below overlying construction.

END OF SECTION 312319

SECTION 31 2323 - FILL

PART 1 - GENERAL

1.1 SUMMARY

A. Includes But Not Limited To:
   1. Perform Project backfilling and compacting as described in Contract Documents, except as specified below.
   2. Procedure and quality for backfilling and compacting performed on Project under other Sections unless specifically specified otherwise.

B. Related Sections:
   1. Section 31 0501: Common Earthwork Requirements.
   2. Division 32.
   3. Performance of backfilling and compacting inside and outside of building required for electrical and mechanical work is responsibility of respective Section doing work unless arranged differently by Contractor.

1.2 REFERENCES

A. American Society For Testing And Materials:
   1. ASTM D 1556-00, “Test Method for Density and Unit Weight of Soil in Place by the Sand-Cone Method”.
   2. ASTM D 1557-02, “Test Method for Laboratory Compaction Characteristics of Soil Using Modified Effort”.
   3. ASTM D 2216-05, “Standard Test Method for Laboratory Determination of Water (Moisture) Content of Soil and Rock”.
   4. ASTM D 2487-06, “Standard Classification of Soils for Engineering Purposes (Unified Soil Classification System)”.
   5. ASTM D 2922-05, “Standard Test Methods for Density of Soil and Soil-Aggregate in Place by Nuclear Methods (Shallow Depth)”.
   6. ASTM D 3017-05, “Standard Test Method for Water Content of Soil and Rock in Place by Nuclear Methods (Shallow Depth)”.

1.3 DEFINITIONS

A. Relative Compaction: Ratio of field dry density as determined by ASTM D 2922 and ASTM D 3017 or 2216, and laboratory maximum dry density as determined by ASTM D 1557.

B. Base Course: Course placed between the subbase course and hot-mix asphalt paving.

C. Subgrade: Surface or elevation remaining after completing excavation, or top surface of a fill or backfill immediately below subbase, drainage fill, or topsoil materials.

1.4 SUBMITTALS

A. Product Data: For the following:
   1. Each type of plastic warning tape.
   2. Geotextile.
   3. Controlled low-strength material, including design mixture.

B. Geotechnical Testing Agency Qualifications: An independent testing agency qualified according to ASTM E 329 to conduct soil materials and rock definition testing, as documented according to ASTM D 3740 and ASTM E 548.

C. Material Test Reports: From a qualified testing agency indicating and interpreting test results for compliance of the following with requirements indicated:
   1. Classification according to ASTM D 2487 of each on-site and borrow soil material proposed for fill and backfill.
   2. Laboratory compaction curve according to ASTM D 1557 for each on-site and borrow soil material proposed for fill and backfill.

D. Compaction Test Reports

1.5 SEQUENCING

A. Before backfilling, show utility and service lines being covered on record set of Drawings. Do not backfill until utilities involved have been tested and approved by Owner.

PART 2 - PRODUCTS

2.1 MATERIALS

A. Site Material: Existing excavated material on site is suitable for use as fill and backfill to meet Project requirements.

B. Imported Fill / Backfill:
   1. Well graded material conforming to ASTM D 2487 free from debris, organic material, frozen materials, brick, lime, concrete, and other material which would prevent adequate performance of backfill.
      a. Under Foundations and Paved Areas: Fill shall comply with soil classification groups GW, GP, GM, SW, SP, or SM. Fill may not contain stones over 4 inches diameter and 90 percent minimum of fill shall be smaller than 1 and 1/2 inch in any direction.

b. Under Landscaped Areas:
   1) Fill more than 36 inches below finish grade shall comply with soil classification groups GW, GP, GM, SW, SP, or SM. Fill may not contain stones over 6 inches diameter and 90 percent minimum of fill shall be smaller than 1 and 1/2 inch in any direction.
   2) Fill less than 36 inches below finish grade shall comply with soil classification groups SW, SP, SM, or SC. Fill may not contain stones larger than 1 and 1/2 inches in any direction and 90 percent minimum of fill shall be smaller than 3/8 inch in any direction.

C. Base under pavements: See Section 32 1216.

2.2 PREPARATION

A. Before placing fill, base, or finish work, prepare sub-grade as follows:
   1. Do not place fill or base over frozen sub-grade.
   2. Under Foundation And Paved Areas: Scarify sub-grade 12 inches deep, moisture condition to uniform moisture content of between optimum and 4 percent over optimum, and mechanically tamp 12 inches deep to 95 percent minimum of relative compaction.
   3. Landscape Areas: Compact sub-grade to 85 percent relative compaction.

2.3 PERFORMANCE

A. Fill / Backfill:
   1. General:
      a. Around Buildings And Structures: Slope grade away from building as specified in Section 31 2216. Hand backfill when close to building or where damage to building might result.
      b. Site Utilities:
         1) In Landscape Areas: Use backfill consisting of on-site soil.
         2) Under Pavement and Concrete Site Elements: Extend excavatable slurry fill / backfill to elevation of sub-grade or compacted fill. Do not place base material, until excavatable slurry fill / backfill has cured 72 hours.
      c. Do not use puddling or jetting to consolidate fill areas.
   2. Compacting:
      a. Fill / Backfill And Base:
         1) Under Foundation and Paved Areas: Place in 8 inch maximum layers, and moisture condition to plus or minus 2 percent of optimum moisture content, and mechanically tamp to 95 percent minimum of maximum density as established by ASTM D 1557.
         2) Utility Trenches:
            a) Landscape Areas: Place fill in 12 inch layers and moisture condition to plus or minus 2 percent of optimum moisture

content. Compact fill to 90 percent minimum relative compaction to within 12 inches of finish grade. Compact fill above 12 inches to 85 percent relative compaction.

b) Under Slabs and Paved Areas: Place fill in 6 inch layers, moisture condition to plus or minus 2 percent of optimum moisture content, and compact to 95 percent minimum relative compaction to within 4 inches of finish grade. Final 4 inches of fill shall be granular base as specified in Section 31 2323.

3) Fill Slopes: Compact by rolling or using sheepsfoot roller.

4) Backfill under Footings: Not allowed.

5) Other Backfills: Place other fills in 12 inch layers and compact to 90 percent relative compaction.

2.4 REPAIR / RESTORATION

A. Repair damage to other portions of the Work resulting from work of this Section at no additional cost to Owner. On new work, arrange for damage to be repaired by original installer.

2.5 CLEANING

A. Debris and material not necessary for Project are property of Contractor and are to be removed before completion of Project. However, if material necessary for Project is hauled away, replace with specified fill / backfill material.

2.6 FIELD QUALITY CONTROL

A. Testing Agency: Contractor will engage a qualified independent geotechnical testing agency to perform field quality-control testing.

B. Allow testing agency to inspect and test sub-grades and each fill or backfill layer. Proceed with subsequent earthwork only after test results for previously completed work comply with requirements.

C. Testing agency will test compaction of soils in place according to ASTM D 1556, ASTM D 2167, ASTM D 2922, and ASTM D 2937, as applicable. Tests will be performed at the following locations and frequencies:

1. Paved and Building Slab Areas: At sub-grade and at each compacted fill and backfill layer, at least 1 test for every 3,000 sq. ft. of paved area or building slab, but in no case fewer than 3 tests.

D. When testing agency reports that sub-grades, fills, or backfills have not achieved degree of compaction specified, scarify and moisten or aerate, or remove and replace soil to depth required; recompact and retest until specified compaction is obtained.

END OF SECTION 31 2323

SECTION 32 1216 - ASPHALT PAVING

PART 1 - GENERAL

1.1 SUMMARY

A. Includes But Not Limited To:
   1. Prepare pavement sub-grade as described in Contract Documents to receive pavement base and paving.
   2. Furnish and install pavement base and asphaltic concrete paving in areas as described in Contract Documents.

B. Related Sections:
   1. Section 31 2323: Compaction procedures and tolerances for fill.

1.2 REFERENCES

A. American Society For Testing And Materials:
   1. ASTM C 131-06, “Standard Test Method for Resistance to Degradation of Small-Size Coarse Aggregate by Abrasion and Impact in the Los Angeles Machine”.
   2. ASTM D 977-05, “Standard Specification for Emulsified Asphalt”.
   3. ASTM D 1075-96 (2005), “Standard Test Method for the Effect of Water on Compressive Strength of Compacted Bituminous Mixtures”.
   4. ASTM D 1188-96 (2002), “Standard Test Method for Bulk Specific Gravity and Density of Compacted Bituminous Mixtures Using Paraffin-Coated Specimens”.
   5. ASTM D 2027-97 (2004), “Standard Specification for Cutback Asphalt (Medium-Curing Type)”.
   6. ASTM D 2041-03a, “Standard Test Method for Theoretical Maximum Specific Gravity and Density of Bituminous Paving Mixtures”.
   7. ASTM D 2397-02, “Standard Specification for Cationic-Emulsified Asphalt”.
   8. ASTM D 2726-04, “Standard Test Method for Bulk Specific Gravity and Density of Compacted Bituminous Mixtures Using Saturated Surface-Dry Specimens”.
   9. ASTM D 3381-92 (1999), “Standard Specification for Viscosity-Graded Asphalt Cement for Use in Pavement Construction”.
   10. AASHTO M 320, “Standard Specification for Performance-Graded Asphalt Binder”.

1.3 SUBMITTALS

A. Quality Assurance / Control:
   1. Mix design of asphalt concrete mixture.
   2. Copies of test results from tests conducted to assure compliance to Contract Document requirements.

B. Manufacturer's application instructions for pre-emergent herbicide. EPA and State DOT approval.

C. Testing Agency Qualifications: Qualified according to ASTM D 3666 for testing indicated.

1.4 QUALITY ASSURANCE

A. Regulatory Requirements: Comply with materials, workmanship, and other applicable requirements of State or local DOT for asphalt paving work.

B. Qualifications: Pre-emergent herbicide shall be applied by applicator certified by State in which Project is located as an applicator of agricultural chemicals.

1.5 PROJECT CONDITIONS

A. Environmental Requirements:
1. Do not perform work during following conditions:
   a. Ambient temperature or temperature of base below 50 deg F.
   b. Presence of free surface water.
   c. Over-saturated base and sub-grade materials.

PART 2 - PRODUCTS

2.1 MATERIAL

A. Pre-emergent herbicide:
1. Selective type pre-emergence control chemical containing 40 percent Trifluralin minimum.
2. Labeled for under-pavement use.

B. Base Aggregates:
1. Top course: Crushed surfacing manufactured from ledge, rock, talus, or gravel, graded as follows:
   a. Sieve — Percent by Weight Passing Sieve
      1) 3/4” square — 100
      2) 1/4 sq. — 55 – 75
      3) No. 40 — 8-24
      4) No. 200 — 10 max
   b. % Fracture: 75% min
   c. Sand Equivalent: 40 min
2. Base course: Crushed surfacing manufactured from ledge, rock, talus, or gravel, graded as follows:

a. Sieve — Percent by Weight Passing Sieve
   1) 1 1/4" square — 100
   2) 5/8" square — 50 – 80
   3) No. 40 — 3 - 18
   4) No. 200 — 7.5 max
b. % Fracture: 75% min
c. Sand Equivalent: 40 min

3. Recycled Aggregate Base:
   a. Pulverized existing asphalt or concrete paving mixed uniformly with existing aggregate base
   b. Conform to following gradation:
      1) Sieve — Percent by Weight Passing Sieve
         a) 2 inch — 100
         b) 1 and 1/2 inch — 85 – 100
         c) 3/4 inch — 60 – 80
         d) No. 4 — 30 – 50
         e) No. 200 — 5 – 12
   c. Quality Requirements as established by testing:
      1) R-value: 70 minimum.
      2) Sand Equivalent: 25 minimum.
      3) Durability Index: 35 minimum.

C. Tack Coat: Emulsified asphalt meeting requirements of either, ASTM D 977, Grade SS-1H, or ASTM D 2397, Grade CSS-1H.

D. Asphalt Materials:
   1. Performance Graded Asphalt Binder:
      a. Performance Graded Asphalt Binder (PGAB) meeting requirements of AASHTO M 320 Table 1 of the grades specified in the Contract shall be used.
   2. Asphalt Cement: If allowed by local DOT, in lieu of Asphalt Binder, use ASTM D 3381 for viscosity-graded material
   3. Aggregates:
      a. Lower Asphalt Concrete Courses: Fine to coarse mineral aggregates with wear less than 40 percent as determined by ASTM C 131 and mineral filler suitable for pavement meeting following gradation requirements:
         1) Sieve — Percent by Weight Passing Sieve
            a) 1 and 1/4 inch — 100
            b) 1 inch — 90-100
            c) 5/8 inch — 67 – 86
            d) 1/2 inch — 60 – 80
            e) 1/4 inch — 40-62
            f) No. 10 — 25 – 40
            g) No. 40 — 10 – 23
            h) No. 200 — 2 – 9

b. Driving Asphalt Concrete Course: Fine to coarse mineral aggregates with wear less than 40 percent as determined by ASTM C 131 and mineral filler suitable for pavement meeting following gradation requirements:

1) Sieve	Percent by Weight Passing Sieve
a) 3/4 inch	100
b) 1/2 inch	90 – 100
c) 3/8 inch	75-90
d) 1/4 inch	55-75
e) No. 10	30 – 42
f) No. 40	11 – 24
g) No. 200	3 – 7

c. Up to 15 percent by weight of total aggregates may consist of pulverized, recycled asphalt cement concrete pavement, providing aggregate grading requirements are met.

2.2 MIXES

A. Dense, hot laid, hot mix asphalt plant hot mixes.
1. Provide mixes with a history of satisfactory performance for heavy truck traffic in geographical area where Project is located.

B. Develop mix design according to Marshall Method to achieve optimum asphalt content as shown by test data curves based on testing samples containing 1/2 percent increments of asphalt content. Samples shall include minimum of two with asphalt content above optimum and two with asphalt content below optimum.

1. Make tests in accordance with ASTM D 1075 (50 blow count Marshall).
2. Final design shall meet following criteria:
   a. Stability: 1200 pounds minimum.
   b. Flow: 8 minimum, 18 maximum.
   c. Air voids: 2 percent minimum, 4 percent maximum.
   d. Voids in mineral aggregate: 15 percent minimum.
   e. Asphalt cement by weight of total: 5 percent minimum.
   f. Dry Strength: 200 psi.
   g. Index of Retained Strength: 75 percent.

PART 3 - EXECUTION

3.1 PREPARATION

A. Survey and stake parking surfaces to show grading required by Contract Documents.

B. Sub-Grade:
1. Finish grade parking surface area to grades required by Contract Documents.
2. Compact sub-grade as specified in Section 31 2323.

C. Pre-emergent Herbicide:
   1. Apply to prepared subgrade dispersed in liquid. Concentrate shall be such that Manufacturer's full recommended rate of chemical will be applied to every 1000 sq ft and liquid will penetrate a minimum of 2 inches.
   2. Application shall be no more than one day before installation of base.
   3. Take necessary precautions to protect adjoining property and areas designated for planting on building site.

3.2 INSTALLATION

A. Site Tolerances:
   1. Sub-Grade: 0.00 inches high. Measure using string line from curb to curb, gutter, flat drainage structure, or grade break.
   2. Base:
      a. Base shall be 6 inches thick minimum after compaction, except where shown thicker on Drawings.
      b. Measure using string line from curb to curb, gutter, flat drainage structure, or grade break.
   3. Paving:

      a. Apply asphaltic concrete paving in single lift 3 inches thick minimum after compaction, except where shown thicker on Drawings. Paving thicker than 3 inches may be applied in two lifts, the first 2 inches thick minimum and the second 1 and 1/2 inches thick minimum.
      b. Paving adjacent to cast-in-place concrete site elements shall be between 1/4 inch higher than concrete and flush with concrete.
      c. Surface texture of hand worked areas shall match texture of machine-laid areas.

B. Base:
   1. If roller is smaller than 8 ton, lay gravel and compact in two courses.
   2. Compact as specified in Section 31 2323.
   3. Priming: Prime base with application of 0.2 to 0.5 gallons of asphalt cement primer per square yardmeter if pavement will be laid more than three days after compaction of base, or if precipitation is anticipated between completion of compaction of base and laying of pavement.
   4. Recompact unprimed base if it receives precipitation before pavement is laid.
   5. Remove or repair improperly prepared areas as directed by Owner.

C. Asphalt Paving:
   1. Tack coat vertical concrete surfaces that will be in contact with paving.
   2. Uniformly mix materials so aggregate is thoroughly coated with asphalt.
   3. Place at temperatures between 250 and 325 deg F with a self-propelled laydown machine.
   4. Longitudinal bituminous joints shall be vertical and properly tack coated if cold. Transverse joints shall always be tack coated.

5. Compaction:
   a. Compact asphalt paving to 96 percent minimum. Determine percent compaction by dividing density of test cores as determined by either ASTM D 1188 or ASTM D 2726 by laboratory compacted density as determined by ASTM D 1559. Maximum total air voids in completed asphaltic concrete shall be 8 percent as determined by ASTM D 2041.
   b. Roll with powered equipment capable of obtaining specified density.
   c. Begin breakdown rolling immediately after asphalt is placed when asphalt temperature is at maximum. Complete breakdown rolling before mix temperature drops below 240 deg F. Complete handwork compaction concurrently with breakdown rolling.
   d. Complete intermediate rolling as soon as possible after breakdown rolling and before mix temperature drops below 185 deg F. Do not roll paving for compaction purposes after asphalt temperature falls below 185 deg F.
   e. Execute compaction so visibility of joints is minimized. Complete finish rolling to improve asphalt surface as soon as possible after intermediate rolling and while asphalt paving is still warm. Do not use vibration for finish rolling.
6. Surface shall be uniform with no 'birdbaths.' Leave finished surfaces clean and smooth. Variations from specified grades shall not exceed 1/2 inch.

3.3 FIELD QUALITY CONTROL

A. Site Tests: When tested with 10 foot straight edge, surface of completed work shall not contain irregularities in excess of 1/4 inch.

B. Laboratory Tests:
   1. Contractor shall employ independent testing laboratory and select test locations, an equal number from near edges of paving and at random in field. Contractor will pay for laboratory services.
   2. Arrange for selected laboratory to make tests after completion of work of this Section. After testing, repair test locations as necessary and remove and replace work not in compliance with Contract Documents at no additional cost to Owner.
   3. Testing laboratory will perform one test series for every 10,000 sq ft of parking and 1 per 250’ of trenches.
      a. Tests reports will show compliance with Contract Documents regarding type of sub base, depth and density of base, depth and density of paving, and in materials used. Reports will also give test procedures used by testing laboratory.
      b. Testing laboratory will forward three copies of test report to Owner.

END OF SECTION 32 1216

Homeland Security

Prepared for the U.S. Department of Homeland Security
U.S. Customs and Border Protection and Domestic Nuclear Detection Office
under U.S. Department of Energy Contract DE-AC05-76RL01830

RADIATION PORTAL MONITOR PROJECT

Pierce County Terminal – Straddle Carrier Portal (SCP), Initial Deployment 100% Design (WS8933)

Revision 1

April 18, 2016

WARNING: This document is FOR OFFICIAL USE ONLY (FOUO). It contains information that may be exempt from public release under the Freedom of Information Act (5 USC 552). It is to be controlled, stored, handled, transmitted, distributed, and disposed of in accordance with DHS policy relating to FOUO information and is not to be released to the public or other personnel who do not have a valid "need to know" without prior approval of an authorized DHS official.

Name/Org: **John Schweppe/PNNL**

Date: **April 15, 2016**

Guide**:** **CG-SMG-2 12/03 DOE OC**

FOUO Sheets: 16, 19 & 20

Pacific Northwest
NATIONAL LABORATORY

FOR OFFICIAL USE ONLY

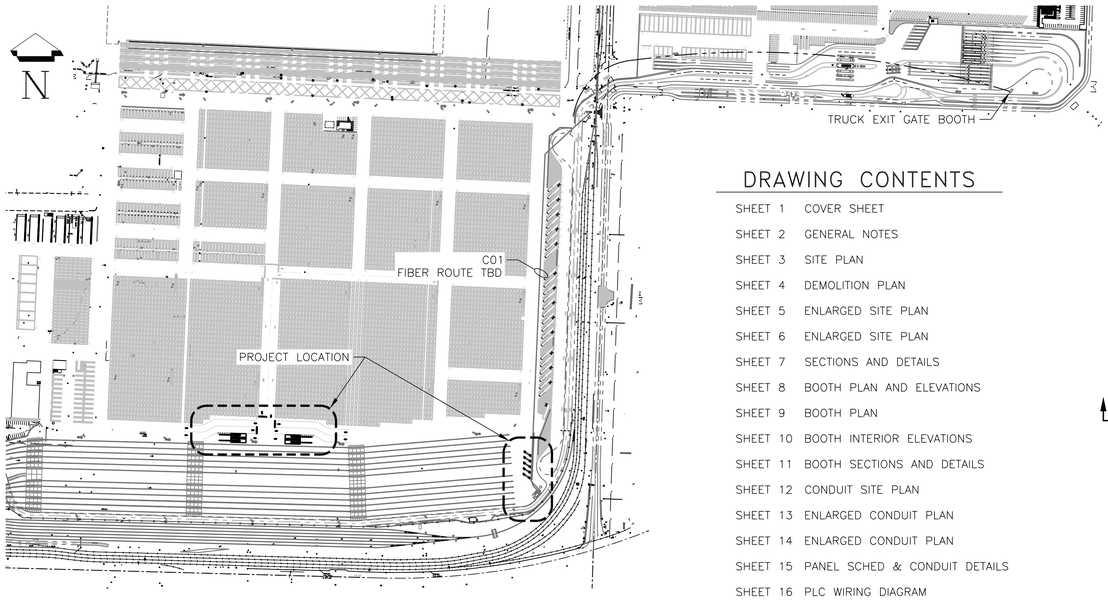

DRAWING CONTENTS

SHEET 1 COVER SHEET
SHEET 2 GENERAL NOTES
SHEET 3 SITE PLAN
SHEET 4 DEMOLITION PLAN
SHEET 5 ENLARGED SITE PLAN
SHEET 6 ENLARGED SITE PLAN
SHEET 7 SECTIONS AND DETAILS
SHEET 8 BOOTH PLAN AND ELEVATIONS
SHEET 9 BOOTH PLAN
SHEET 10 BOOTH INTERIOR ELEVATIONS
SHEET 11 BOOTH SECTIONS AND DETAILS
SHEET 12 CONDUIT SITE PLAN
SHEET 13 ENLARGED CONDUIT PLAN
SHEET 14 ENLARGED CONDUIT PLAN
SHEET 15 PANEL SCHED & CONDUIT DETAILS
SHEET 16 PLC WIRING DIAGRAM
SHEET 17 MISC WIRING DIAGRAMS
SHEET 18 WIRING SCHEMATIC
SHEET 19 WIRING SCHEMATIC
SHEET 20 WIRING SCHEMATIC
SHEET 21 COMMS CABLE SCHEDULE
SHEET 22 POWER CABLE SCHEDULE
SHEET 23 CONDUIT SCHEDULE
SHEET 24 EQUIPMENT SCHEDULE
SHEET 25 EQUIPMENT SCHEDULE

LEGEND

NEW STRUCTURE OR EQUIPMENT (ABOVE GRADE)
EXST STRUCTURE, EQUIPMENT OR CONDUIT (ABOVE GRADE)
NEW CONDUIT ROUTING (ABOVE GRADE)
NEW CONDUIT ROUTING (BELOW GRADE OR IN TRENCH)
EXST CONDUIT (ABOVE/BELOW GRADE TO BE UTILIZED)
SF — NEW DIRECT BURIED FIBER (IN SAW CUT)
F — NEW FIBER
AF — NEW AERIAL FIBER (ABOVE GRADE)
NEW FENCE
NEW HMAC PAVEMENT
NEW CONCRETE
X = DETAIL NUMBER
Y = SHEET(S) WHERE DETAIL IS LOCATED
X = SECTION LETTER
Y = SHEET(S) WHERE SECTION IS LOCATED
NEW BOLLARD
EXST BOLLARD
CONDUIT "UP"
CONDUIT "DOWN"
CONDUIT "CAP"
DUPLEX ELECTRICAL OUTLET
XXX — EQUIPMENT (SEE EQUIPMENT LIST, LAST SHEET)
LIGHT POLE
POWER POLE
AREA SURVEILLANCE CAMERA
VIS CAMERA
SURGE PROTECTION DEVICE

A/F	AERIAL FIBER
AC	AIR CONDITIONER
ACI	AMERICAN CONCRETE INSTITUTE
AEI	AUTOMATIC EQUIPMENT IDENTIFICATION
AFF	ABOVE FINISHED FLOOR
AISC	AMERICAN INSTITUTE OF STEEL CONSTRUCTION
ANI	ALARM ANNUNCIATOR (INDOOR)
ANN	ANNUNCIATOR
ANO	ALARM ANNUNCIATOR (OUTDOOR)
AR	AS REQUIRED
ASC	AREA SURVEILLANCE CAMERA
ASCE	AMERICAN SOCIETY OF CIVIL ENGINEERS
ASD	ALLOWABLE STRESS DESIGN
ASTM	AMERICAN SOCIETY OF TESTING AND MATERIALS
AWG	AMERICAN WIRE GAUGE
AWS	AMERICAN WELDING SOCIETY
B	BEACON
BB	BATTERY BOX
BOBP	BOTTOM OF BASE PLATE
C/C	CENTER TO CENTER
CAT6PP	CAT6 PATCH PANEL
CB	CONTROL BOX
CCB	COMMUNICATIONS CONTROL BOX
CBP	U.S. CUSTOMS & BORDER PROTECTION
CCXX	COMMUNICATION CONDUIT
CDF	CONTROLLED DENSITY FILL (LEAN CONCRETE)
℄	CENTERLINE
CG	CORD GRIP
CH	CHAPTER
CI	CONTRACTOR INSTALLED
CJP	COMPLETE JOINT PENETRATION
CLR	CLEAR
CMP	CORRUGATED METAL PIPE
CMU	CONCRETE MASONRY UNIT
CP	CONTRACTOR PROVIDED
CS	CARBON STEEL
DOT	DEPARTMENT OF TRANSPORTATION
DVR	DIGITAL VIDEO RECORDER
EMT	ELECTRICAL METAL TUBING
ENET	ETHERNET
ES	ETHERNET SWITCH
ETC	ET CETERA
EXST	EXISTING
FBB	FIBER BREAK OUT BOX
FEMA	FEDERAL EMERGENCY MANAGEMENT AGENCY
FPP	FIBER PATCH PANEL
FS	FIBER SPLICE/COUPLER
FT	FEET OR FOOT
G	NATURAL GAS
GA	GAUGE
GFE	GOVERNMENT FURNISHED EQUIPMENT
GR	GRADE
GSA	GENERAL SERVICES ADMINISTRATION
HMAC	HOTMIX ASPHALT CONCRETE
HMI	HUMAN–MACHINE INTERFACE
IBC	INTERNATIONAL BUILDING CODE
IC	INTERCOM
ICC	INTERNATIONAL CODE COUNCIL
IE	INVERT ELEVATION
IN	INCHES
IO	INSTALLED BY OTHERS
JB	JUNCTION BOX
LAN	LOCAL AREA NETWORK
LB	L STYLE CONDUIT BODY
LPR	LICENSE PLATE READER
MAX	MAXIMUM
MC	MEDIA CONVERTER
MH	MAN HOLE
MIN	MINIMUM
MNC	MONITOR COMPUTER
MPH	MILES PER HOUR
MUTCD	MANUAL ON UNIFORM TRAFFIC CONTROL DEVICES
NEC	NATIONAL ELECTRICAL CODE
NFPA	NATIONAL FIRE PROTECTION ASSOCIATION
NIC	NOT IN CONTRACT
NII	NON–INTRUSIVE INSPECTION
OC	ON CENTER
OH	OPPOSITE HAND
OIT	CBP OFFICE OF INFORMATION TECHNOLOGY
OSE	OPTICAL SENSOR EMITTER
OSR	OPTICAL SENSOR RECEIVER
P	POWER
PCXX	POWER CONDUIT
PDCA	PAINTING AND DETAILING CONTRACTORS OF AMERICA
PF	PREFABRICATED
PL	PLACES
PLC	PROGRAMMABLE LOGIC CONTROLLER
PNNL	PACIFIC NORTHWEST NATIONAL LABORATORY
POB	POINT OF BEGINNING
POV	PRIVATELY OWNED VEHICLE
PP	PATCH PANEL
PS	POWER SUPPLY
PSF	POUNDS PER SQUARE FOOT
PSI	POUNDS PER SQUARE INCH
PTR	PRINTER
PTZ	PAN TILT ZOOM
PVC	POLYVINYL CHLORIDE
R	RELAY
RAI	REMOTE ALARM INDICATOR
RB	RELAY BOX
RMC	RIGID METAL CONDUIT
RO	REMOTE OPERATION
RPM	RADIATION PORTAL MONITOR
RR	RAILROAD
RSP	RADIATION SENSOR PANEL
S/N	SERIAL NUMBER
SAE	SOCIETY OF AUTOMOTIVE ENGINEERS
SCF	SAW CUT FIBER
SD	STORM DRAIN
SFF	SMALL FORM FACTOR
SOW	STATEMENT OF WORK
SP	SOURCE PANEL (EXISTING PANEL)
SPC	SUPERVISOR COMPUTER
SPD	SURGE PROTECTION DEVICE
SS	STAINLESS STEEL
T&B	TOP AND BOTTOM
TA	TOP OF ASPHALT
TB	T STYLE CONDUIT BODY
TEL	TELEPHONE
TG	TOP OF GRAVEL
THHN	THERMOPLASTIC HIGH–HEAT RESISTANT NYLON COATED
THWN	THERMOPLASTIC HEAT AND WATER RESISTANT NYLON COATED
TL	TRAFFIC LIGHT
TLC	TRAFFIC LIGHT CONTROLLER
TLS	TRAFFIC LIGHT SWITCH
TOC	TOP OF CONCRETE
TS	TUBE STEEL
TYP	TYPICAL
UL	UNDERWRITERS LABORATORY INCORPORATED
UNC	UNIFIED NATIONAL COARSE
UNO	UNLESS NOTED OTHERWISE
UPS	UNINTERRUPTIBLE POWER SUPPLY
USGS	UNITED STATES GEOLOGICAL SURVEY
UV	ULTRA VIOLET
VAC	VOLTAGE ALTERNATING CURRENT
VDC	VOLTAGE DIRECT CURRENT
VIS	VEHICLE IDENTIFICATION SYSTEM
VLT	VAULT
VPI	VEHICLE PRESENCE INDICATOR
VPS	VEHICLE PRESENCE SENSOR
W	WATER
WM	WATER METER
WP	WEATHERPROOF
(X'–X")	REFERENCE DIMENSION OR INFO

PIERCE COUNTY TERMINAL
UNITED STATES PORT OF ENTRY
RADIATION PORTAL MONITOR PROJECT
LEIDOS PVT
INITIAL DEPLOYMENT
STRADDLE CARRIER PORTAL (SCP)
100% DESIGN

THIS DRAWING SET CONTAINS MATERIAL THAT IS FOR OFFICIAL USE ONLY

PAUL M. GIEVER — STATE OF WASHINGTON — 28084 — STRUCTURAL ENGINEER — PROFESSIONAL ENGINEER
4/18/16

UNCLASSIFIED

Meier ARCHITECTURE•ENGINEERING
Job No: 7833
www.meierinc.com
8697 Gage Boulevard
Kennewick, WA 99336
P: 509.735.1589
F: 509.783.5075

PORT OF TACOMA – PCT
STRADDLE CARRIER PORTAL
COVER SHEET

ISSUE DATE	CROSSING CODE	SCALE
4/18/16	17031	NONE

SIZE	DWG NO	DWG CODE	SHEET NO	SHEETS	REV
F	WS8933	–	1	25	1

\PROJECTS\7800\7833 Tacoma Straddle Carrier\DWG\WS8933_01_1.dwg - Apr 18,2016 - 02:35pm - mtd
Apr 18, 2016 ~ 02:35pm ~ _mtdavalle

GENERAL NOTES

(UNLESS OTHERWISE SPECIFIED)

1.0 GENERAL

1.1 ALL CONSTRUCTION SHALL MEET OR EXCEED CURRENT INTERNATIONAL BUILDING CODE (ICC-IBC), NATIONAL ELECTRICAL CODE (NFPA 70), AND LOCAL REQUIREMENTS.

1.2 DESIGN DRAWINGS AND STATEMENT OF WORK (SOW) AND/OR TECHNICAL SPECIFICATION AND DIVISION 1 SPECIFICATION MAY EXCEED CODE REQUIREMENTS AND SHALL TAKE PRECEDENCE.

1.3 VERIFY ALL EXISTING SITE CONDITIONS ABOVE AND BELOW GRADE AND DIMENSIONS PRIOR TO BEGINNING WORK. THE PNNL SITE MANAGER OR CONSTRUCTION MANAGER SHALL BE NOTIFIED OF ANY DISCREPANCY. (DO NOT SCALE DRAWINGS)

1.4 ALL MATERIALS AND EQUIPMENT SHALL BE INSTALLED IN STRICT ACCORDANCE WITH MANUFACTURERS WRITTEN INSTRUCTIONS, AS APPLICABLE AND THE APPROVED DESIGN DOCUMENTS.

1.5 ALL SURFACES DAMAGED DURING CONSTRUCTION SHALL BE REPAIRED TO MATCH EXISTING CONDITIONS AND ADJACENT SURFACE FINISH (COLOR, SLOPE, TEXTURE AND APPEARANCE).

1.6 ALL SIGNS SHALL COMPLY WITH STATE DOT STANDARDS AND MANUAL ON UNIFORM TRAFFIC CONTROL DEVICES (MUTCD) STANDARDS.

1.7 CONTRACTOR SHALL MAINTAIN AND PROVIDE A SET OF RED LINE DESIGN DOCUMENTS (DRAWINGS, SPECIFICATIONS, ETC) TO PNNL INDICATING ALL CHANGES AND FIELD ROUTING AUTHORIZED BY PNNL DURING INSTALLATION.

1.8 CONTRACTOR SHALL OBTAIN AND PAY FOR ALL REQUIRED PERMITS AND FEES AS DESCRIBED IN CONTRACT DOCUMENTS AND AS REQUIRED BY LOCAL JURISDICTION.

1.9 CONTRACTOR SHALL COORDINATE THE START OF AT-SITE WORK WITH THE PNNL SITE MANGER AND/OR CONSTRUCTION MANAGER.

1.10 PNNL SITE MANAGER OR CONSTRUCTION MANAGER SHALL BE NOTIFIED OF ANY DISCREPANCIES IN THE CONTRACT DOCUMENTS.

1.11 CONTRACTOR SHALL CONDUCT LAYOUT FOR RPM HARDWARE AND BELOW GRADE SUBSTRUCTURE MARK AND LOCATE PRIOR TO START OF EXCAVATION WORK. PORT, CBP AND PNNL SHALL BEAR NO RESPONSIBILITY FOR EXPENSES INCURRED AS A RESULT OF FAILURE ON THE PART OF THE CONTRACTOR TO VERIFY DIMENSIONS AND/OR VERIFIABLE SITE CONDITIONS PRIOR TO BEGINNING WORK. SEE DIVISION 1 FOR MORE DETAILS.

1.12 PORT SHALL BEAR NO RESPONSIBILITY FOR FAILURE ON THE PART OF THE CONTRACTOR TO COORDINATE ACTIVITIES OF CONTRACTOR'S EMPLOYEES OR SUBCONTRACTORS.

1.13 ALL SALVAGEABLE ITEMS REMOVED DURING COURSE OF WORK SHALL REMAIN THE PROPERTY OF THE OWNER AND STORED/PROTECTED BY CONTRACTOR UNTIL OWNER TAKES POSSESSION, UNLESS OTHERWISE SPECIFIED.

1.14 CONTRACTOR SHALL CONTACT SUBSTRUCTURE OWNERS TO VERIFY LOCATIONS OF SUBSTRUCTURES (7 DAYS) PRIOR TO EXCAVATING.

1.15 WHERE CROSSING ANY SUBSTRUCTURES WITH NEW SUBSURFACE IMPROVEMENTS, THE CONTRACTOR SHALL TRENCH CAREFULLY TO LOCATE ALL ACTIVE AND IDLE SUBSTRUCTURES AT THESE CROSSINGS. IT SHALL BE THE RESPONSIBILITY OF THE CONTRACTOR TO LOCATE ALL EXISTING UTILITIES WHETHER SHOWN HEREON OR NOT AND TO PROTECT THEM FROM DAMAGE. CONTRACTOR SHALL BEAR ALL EXPENSE OF REPAIR OR REPLACEMENT IN CONJUNCTION WITH THE EXECUTION OF THIS WORK.

1.16 ALL DEBRIS AND TRASH SHALL BE COLLECTED FROM SITE EACH DAY. CONTRACTOR IS RESPONSIBLE FOR THE COLLECTION, MANAGEMENT AND HAULING OF TRASH FROM SITE.

1.17 CONSTRUCTION SHALL NOT RESTRICT A FIVE-FOOT CLEAR AND UNOBSTRUCTED ACCESS TO ANY WATER OR POWER DISTRIBUTION FACILITIES (POWER POLES, PULL-BOXES, TRANSFORMERS, VAULTS, PUMPS, VALVES, METERS, APPURTENANCES, ETC.) OR TO THE LOCATION OF THE HOOK-UP. THE CONSTRUCTION SHALL NOT BE WITHIN TEN FEET OF ANY POWER LINES--WHETHER OR NOT THE LINES ARE LOCATED ON THE PROPERTY.

1.18 ALL EQUIPMENT AND MATERIALS PROVIDED BY CONTRACTORS TO BE NEW.

1.19 IN CONFLICTS BETWEEN SPECIFICATIONS AND DRAWINGS, DRAWINGS SHALL TAKE PRECEDENCE.

2.0 PHASING OF WORK

2.1 CONTRACTOR SHALL MAINTAIN AND PROVIDE UNINTERRUPTED ACCESS TO PORT FACILITIES AT ALL TIMES.

2.2 CONTRACTOR SHALL PROVIDE A TRAFFIC CIRCULATION PLAN FOR APPROVAL AT EACH WORK AREA FOR EACH PHASE OF CONSTRUCTION. APPROVAL SHALL BE OBTAINED 14 DAYS PRIOR TO COMMENCEMENT OF TRAFFIC CONTROL PROCEDURE.

3.0 STEEL

3.1 UNLESS SPECIFIED ELSE WHERE ALL STEEL SHALL BE ASTM A36.

3.2 WELDING QUALIFICATIONS AND FABRICATION FOR CARBON STEEL SHALL BE PER AWS D1.1-2002. PERFORM 100% VISUAL EXAMINATION OF ALL FINAL WELDS FOR FIELD WELDS AND WELDS ON STRUCTURAL COMPONENTS OR REBAR PER AWS D1.1-2002, SECTION 6, WITH ACCEPTANCE CRITERIA PER SECTION 6, PART C.

3.3 MINOR FIELD WELDING (UNI-STRUT, RELOCATABLE BASE PLATES, AND SIGNAGE) DOES NOT REQUIRE INSPECTION BY CERTIFIED WELD INSPECTOR. THE WELDING SHALL BE PERFORMED BY A CERTIFIED WELDER. REMOVE PAINT/GALVANIZING PRIOR TO WELDING. REMOVE SLAG, WIRE BRUSH AND APPLY PRIMER/PAINT TO FINAL WELD. THE WELDS SHALL BE CONSISTENT WITH GOOD WELDING PRACTICES.

3.4 ALL STEEL PIPE TUBING SHALL BE ASTM A53, GRADE B.

3.5 FABRICATE ALL STRUCTURAL STEEL FOR CLOSE FIT WITH ERECTION HOLES ACCURATELY ALIGNED, AND WITHIN TOLERANCES GIVEN IN AISC MANUAL OF STEEL CONSTRUCTION.

3.6 REINFORCING STEEL SHALL BE DEFORMED BILLET STEEL BARS CONFORMING TO ASTM A615 GRADE 40 FOR BARS SPECIFIED AS #3'S AND SMALLER, ASTM A615 GRADE 60 FOR BARS SPECIFIED AS #4'S AND LARGER. BARS SHALL BE CONTINUOUS AROUND CORNERS AND LAPPED PER INTERNATIONAL BUILDING CODE.

4.0 PAINT

4.1 ALL SURFACES SHALL BE CLEANED AND PREPARED IN STRICT ACCORDANCE WITH THE PAINTING AND DECORATING CONTRACTORS OF AMERICA (PDCA) ARCHITECTURAL PAINTING AND WALL COVERING MANUAL.

4.2 EXTERIOR METAL
PRIME COAT: C163 ALKYD OIL PRIMER (STEEL SURFACES ONLY)
FINISH: 2 COATS URETHANE ALKYD GLOSS ENAMEL
COLOR: SAFETY YELLOW

4.3 TOUCH-UP METAL SURFACES AT COMPLETION OF INSTALLATION.

4.4 ALL TRAFFIC MARKINGS SHALL COMPLY WITH STATE DOT.

4.5 ALL TRAFFIC MARKINGS ON HMAC SHALL BE A REFLECTORIZED THERMOPLASTIC MATERIAL AS APPROVED BY STATE DOT.

4.6 ALL TRAFFIC MARKINGS ON CONCRETE SHALL BE PAVEMENT PAINT AS APPROVED BY STATE DOT.

5.0 EXCAVATION AND BACKFILL

5.1 TRENCHES AND OTHER EXCAVATIONS SHALL BE PLATED WITH STEEL PLATES OF A SIZE AND THICKNESS CAPABLE OF CARRYING TRAFFIC LOADS ANTICIPATED FOR THE GIVEN LOCATION WHEN THE CONTRACTOR IS NOT ON SITE.

5.2 CONTRACTOR IS RESPONSIBLE FOR ALL TRAFFIC CONTROL AND SHALL COMPLY WITH MUTCD AND LOCAL REQUIREMENTS.

5.3 CONTRACTOR IS RESPONSIBLE FOR COORDINATING ALL REMOVAL WORK NECESSARY TO CONSTRUCT IMPROVEMENTS AND WITHIN THE APPROPRIATE SEQUENCE OF WORK SO AS TO MAINTAIN TRAFFIC AND PROMOTE SAFETY.

5.4 TRENCHING, SHORING, CONDUIT INSTALLATION, AND BACKFILLING SHALL BE IN ACCORDANCE WITH DRAWINGS, TECHNICAL SPECIFICATIONS AND STANDARD SPECIFICATIONS FOR PUBLIC WORKS CONSTRUCTION, LATEST EDITION, SECTION 306-1.

5.5 OPEN TRENCH SHORING SHALL BE DONE IN ACCORDANCE WITH THE REGULATIONS OF OCCUPATIONAL SAFETY AND HEALTH ADMINISTRATION (OSHA) AND LOCAL JURISDICTIONS. PRIOR TO COMMENCING THE EXCAVATION OF TRENCHES 4 FEET IN DEPTH OR GREATER INTO WHICH A PERSON WILL BE REQUIRED TO DESCEND, THE CONTRACTOR SHALL OBTAIN AND PAY FOR ANY EXCAVATION/TRENCHING PERMITS.

5.6 EARTH FILL MATERIAL FOR USE UNDER FOUNDATIONS, FOOTINGS, SLABS AND CONCRETE/ASPHALT IN TRAFFIC AREAS SHALL BE CLEAN, NON-EXPANSIVE, AND FREE OF ORGANIC MATTER OR OTHER DELETERIOUS SUBSTANCES. MATERIAL SHALL NOT BE PREDOMINANTLY OF ONE SIZE AND SHALL HAVE A SAND EQUIVALENT VALUE OF NOT LESS THAN 15 NOR GREATER THAN 60 PER ASTM D2419, 95-100% SHALL PASS THE 1-1/2 INCH SIEVE.

5.7 THE SIDES OF ALL TRENCHES AND EXCAVATIONS INSTALLED THROUGH EXISTING CONCRETE OR ASPHALT PAVEMENT SHALL BE SAW CUT PRIOR TO EXCAVATION. CONCRETE OVERCUTS SHALL BE FILLED WITH NON-SHRINK GROUT.

5.8 ALL TRENCH BACKFILL IN UNPAVED AREAS SHALL BE CONCRETE TO 6" THICK AROUND CONDUIT. NO STONES LARGER THAN 6" ALLOWED IN NATIVE BACKFILL MATERIAL. COMPACT BACKFILL IN MAXIMUM 8" LIFTS TO 85% OF MAXIMUM DENSITY. STOCKPILE THE TOP 12" (TOPSOIL) SEPARATELY DURING EXCAVATION AND REPLACE TO MATCH EXISTING. REPAIR OR REPLACE LANDSCAPING OR TURF TO MATCH EXISTING. PROTECT IN PLACE OR REPAIR TO MATCH EXISTING IRRIGATION PIPING AND APPURTENANCES.

5.9 ALL TRENCH BACKFILL UNDER EXISTING CONCRETE AND ASPHALT PAVEMENT SHALL BE CONCRETE TO 6" THICK AROUND CONDUIT. CONCRETE OR COMPACTED BACKFILL SHALL THEN BE USED FOR THE REMAINDER OF THE TRENCH BACKFILL UP TO THE BASE OF EXISTING CONCRETE OR ASPHALT PAVEMENT.

5.10 CDF NOT TO BE USED, CONTRACTOR SHALL SUBSTITUTE 4500 PSI CONCRETE AS NEEDED.

5.11 CONTRACTOR SHALL VERIFY THAT THERE WILL BE NO NEGATIVE IMPACT TO DRAINAGE DUE TO NEW WORK.

5.12 IF SOIL DISPOSED OF IS DETERMINED TO BE CONTAMINATED CONTRACTOR SHALL NOTIFY PNNL AND FOLLOW ALL APPROPRIATE REGULATIONS AND REQUIREMENTS.

6.0 COMPACTION

6.1 MINIMUM RELATIVE COMPACTION UNDER BUILDING FOUNDATIONS, FOOTINGS AND SLABS AND CONCRETE/ASPHALT TRAFFIC AREAS SHALL BE 95% OF MAXIMUM DRY DENSITY.

6.2 AT THE TIME OF COMPACTION, THE MOISTURE CONTENT OF THE FILL MATERIAL SHALL BE SUCH THAT THE SPECIFIED COMPACTION MAY BE OBTAINED WITH THE COMPACTION EQUIPMENT BEING USED.

7.0 ELECTRICAL

7.1 ELECTRICAL INSTALLATION SHALL BE IN ACCORDANCE WITH THE NATIONAL ELECTRICAL CODE AND SUPPLEMENTED BY THE LOCAL AUTHORITY HAVING JURISDICTION. INSTALLATION SHALL BE CHECKED FOR CODE COMPLIANCE AND REWORK SHALL BE REQUIRED TO MEET CODE AS NECESSARY AT CONTRACTOR'S EXPENSE.

7.2 IN INSTANCES WHERE LOCAL CODE JURISDICTIONS DO NOT REQUIRE AN ELECTRICAL INSPECTION, THE CONTRACTOR WILL HIRE AN INDEPENDENT NEC QUALIFIED INSPECTOR TO INSPECT THE FINAL ELECTRICAL INSTALLATION.

7.3 ALL CABLES AND PULL STRINGS SHALL BE MARKED WITH A CABLE LABEL THAT HAS PERMANENT BLACK LETTERING ON A WHITE BACKGROUND. CABLE NOMENCLATURE SHALL BE CONSISTENT WITH THE CONDUIT SCHEDULE AND RPM SITE ELECTRICAL SCHEMATIC MARKINGS.

7.4 PROVIDE AND INSTALL CORRECT, TYPEWRITTEN, PANEL DIRECTORIES OF NEW OR REVISED PANEL AND/OR SUB-PANEL CIRCUITS.

7.5 PROVIDE AND INSTALL AN ELECTRONICALLY GENERATED OR ENGRAVED ADHESIVE LABEL FOR IDENTIFICATION AT NEW PANELS, SUB-PANELS AND/OR RPM EQUIPMENT AS DIRECTED.

7.6 PROVIDE A SEPARATE INDIVIDUAL NEUTRAL CONDUCTOR FOR EACH RPM CIRCUIT.

7.7 ALL ELECTRICAL GROUNDING SHALL MEET NEC CODES (AND LOCAL GROUNDING REQUIREMENTS). WHERE A SUB-PANEL IS LOCATED IN A SEPARATE STRUCTURE, THE NEUTRAL SHALL NOT BE BONDED TO THE GROUND BUS.

7.8 ALL CIRCUIT BREAKERS, FUSES AND ELECTRICAL EQUIPMENT SHALL HAVE AN INTERRUPTING RATING NOT LESS THAN THE MAXIMUM SHORT CIRCUIT CURRENT TO WHICH THEY MAY BE SUBJECTED.

7.9 ALL MATERIALS AND EQUIPMENT SHALL BE NEW AND SHALL BEAR THE UNDERWRITERS LABEL (UL) AND SHALL BE INSTALLED IN THE MANNER FOR WHICH IT IS DESIGNED AND APPROVED.

7.10 INSTALL ALL CONDUITS AND WIRES WITH A MINIMUM NUMBER OF BENDS AND IN SUCH A MANNER AS TO CONFORM TO THE STRUCTURE. AVOID OBSTRUCTIONS.

7.11 ALL FINAL TERMINATIONS SHALL BE MADE BY THE CONTRACTOR. ALL RPM CONNECTIONS SHALL BE MADE BY THE CONTRACTOR UNDER PNNL VENDORS SUPERVISION.

7.12 THE CONTRACTOR SHALL SEAL ELECTRICAL CONDUIT ENTERING AREAS OF TEMPERATURE CHANGE BY SEALING TYPE FITTINGS TO PREVENT AIR MIGRATION AND CONDENSATION.

7.13 THE ENTIRE WIRING SYSTEM SHALL BE TESTED FOR SHORT CIRCUITS, GROUNDS AND INSULATION RESISTANCE BETWEEN CONDUCTORS AND TO GROUND.

7.14 FURNISH AND INSTALL ALL CONDUITS, WIRES, BOXES, SWITCHES, LIGHT FIXTURES (WITH LAMPS), RECEPTACLES, SERVICE DEVICES, AND PANEL BOARDS REQUIRED FOR A COMPLETE AND OPERATIONAL ELECTRICAL SYSTEM. ALL STARTERS, FUSED DISCONNECTS, BREAKERS, FUSES, CONTACTORS, SWITCHES, J-BOXES, CONDUIT, CONDULETS AND WIRES THAT ARE NOT SUPPLIED BY THE EQUIPMENT MANUFACTURER IN A PREWIRED PANEL ARE BY THE CONTRACTOR UNLESS OTHERWISE NOTED.

7.15 ALL SWITCHES AND CIRCUIT BREAKERS, DISCONNECTING MOTORS OR CONTROLLING ELECTRICAL DISCHARGE LIGHTING SHALL BE WITHIN SIGHT OF MOTORS OR FIXTURES (NOT OVER 50 FT) OR BE CAPABLE OF BEING LOCKED IN THE OPEN POSITION.

7.16 THE ELECTRICAL DRAWINGS ARE DIAGRAMMATIC AND DO NOT SHOW ALL OFFSETS, BENDS, FITTINGS, JUNCTIONS, BOXES, PULL BOX AND EXPANSION FITTINGS REQUIRED TO MEET FIELD CONDITIONS. THE CONTRACTOR SHALL DETERMINE ACTUAL MATERIAL AND HARDWARE REQUIREMENTS AND VERIFY ALL DIMENSIONS BY FIELD INSPECTION.

7.17 MINIMUM DEPTH OF DIRECT BURIAL AND CONCRETE ENCASED CONDUIT SHALL BE 24" (OR PER LOCAL CODE) FROM FINISHED SURFACE UNLESS OTHERWISE NOTED.

7.18 ELECTRICAL EQUIPMENT AND DEVICES INSTALLED OUTDOORS SHALL BE ENCLOSED IN WEATHERPROOF, CORROSION RESISTANT, STAINLESS STEEL NEMA 4X ENCLOSURES.

7.19 CONTRACTOR SHALL PROVIDE AND INSTALL PULL BOXES, WEATHERPROOF ENCLOSURES, JUNCTION BOXES, AND VAULTS, AS NECESSARY TO FACILITATE INSTALLATION AND MEET CODE (EVEN IF NOT SHOWN IN THE DRAWINGS).

8.0 POWER WIRING

8.1 FOR ALL DRY AND DAMP LOCATIONS USE COPPER WIRE WITH THHN OR THWN INSULATION.

8.2 FOR ALL DAMP AND WET LOCATIONS USE COPPER WIRE WITH THWN INSULATION.

8.3 MINIMUM WIRE GAUGE FOR RPM POWER CIRCUITS SHALL BE 12 AWG.

9.0 RPM SIGNAL CABLE

9.1 CABLING BETWEEN THE CONTROL BOX AND ANNUNCIATORS (INDOOR OR OUTDOOR) OR CONTROL BOX AND RSPS SHALL BE 8 CONDUCTOR (4 TWISTED PAIR SHIELDED, OUTDOOR RATED COMMUNICATION CABLE WITH DIRECT BURIAL JACKET. REFER TO RPM8 RADIATION PORTAL MONITOR SYSTEM INSTALLATION MANUAL (LATEST REVISION) FOR REQUIRED CONDUCTOR SIZE. NOTE THAT THE CONTRACTOR SHALL COMPLY WITH SIZES RECOMMENDED IN THIS MANUAL.

9.2 CONTRACTOR TO VERIFY FINAL RUN LENGTHS IN THE FIELD.

9.3 ALL FINAL TERMINATIONS SHALL BE MADE BY THE CONTRACTOR.

9.4 DATA CABLE HANDLING AND INSTALLATION SHALL BE ACCOMPLISHED BY TRAINED INSTALLERS ONLY.

9.5 SIGNAL CABLES SHALL BE VERIFIED AT BOTH ENDS FOR ACCURATE TERMINATION AND CONTINUITY.

10.0 ETHERNET CABLE (CATEGORY 6)

10.1 CONTRACTOR TO VERIFY FINAL RUN LENGTHS IN THE FIELD.

10.2 TERMINATE ALL CAT 6 CABLE WITH AN RJ-45 CONNECTOR. NO SPLICING ALLOWED.

10.3 THE CONTRACTOR SHALL TEST THE CABLES WITH A DTX CABLEANALYZER CABLE TESTER (OR APPROVED EQUIVALENT). DTX CABLEANALYZER IS A REGISTERED TRADEMARK OF FLUKE NETWORKS AND SERVICES.

10.4 APPROVED CABLES CAN BE FOUND IN CABLE EQUIVALENCE SCHEDULE.

11.0 ETHERNET CABLE (FIBER OPTIC CABLE)

11.1 INSTALL AND TEST THE FIBER OPTIC MEDIA IN ACCORDANCE WITH CONTRACT DRAWINGS, SPECIFICATIONS, INSTITUTE OF ELECTRICAL AND ELECTRONIC ENGINEERS (IEEE) STANDARD C2, NFPA 70 AND TELECOMMUNICATION INDUSTRY (TIA) STANDARD TIA-590-A.

11.2 ALL SPLICES IN FIBER OPTIC CABLE SHALL BE FUSED SPLICES

11.3 DO NOT ALLOW BENDS IN MEDIA WHICH EXCEED THE MANUFACTURER'S MINIMUM RECOMMENDED RADIUS OR 10 TIMES THE OUTSIDE DIAMETER OF THE CABLE, WHICHEVER IS GREATER.

11.4 A HORIZONTAL SLACK OF APPROXIMATELY 3' SHALL BE LEFT ON EACH SIDE OF CONNECTION BOXES AND AT POINTS WHERE CONNECTIONS ARE BROUGHT ABOVE GROUND. ADDITIONAL SLACK SHALL BE PROVIDED TO MAKE ANY NECESSARY CONNECTIONS.

11.5 CONTRACTOR WILL PROVIDE PNNL WITH TOTAL INDIVIDUAL LINK TEST AND RESULTS DOCUMENTATION FOR EACH FIBER RUN, CABLE, AND STRAND.

11.6 SINGLE MODE FIBER SHALL BE TESTED IN ACCORDANCE WITH TIA-526-7 (OPTICAL POWER LOSS). MULTI MODE FIBER SHALL BE TESTED IN ACCORDANCE WITH TIA-526-14-A AFTER ALL TERMINATIONS AND SPLICES ARE COMPLETE.

11.7 DATA CABLE HANDLING AND INSTALLATION SHALL BE ACCOMPLISHED BY A TRAINED INSTALLER ONLY.

11.8 TERMINATIONS WILL BE WITH TERMINAL TYPES AS SPECIFIED IN THE DRAWINGS. VERIFY AND MATCH EXISTING AS REQUIRED.

11.9 THE CONTRACTOR SHALL TERMINATE AS MANY STRANDS OF THE FIBER OPTIC CABLE AS SHOWN IN DESIGN PLUS TWO SPARES. CABLE AND CONNECTORS WILL BE CHECKED BY A HIGH PERFORMANCE OPTICAL TIME DOMAIN REFLECTOMETER FOR MULTIMODE AND SINGLE MODE SYSTEMS (OR APPROVED EQUIVALENT). THE CONNECTORS SHALL EXHIBIT <=0.5DB LOSS PER CONNECTION @ BOTH 1300NM AND 1550NM, AS MEASURED PER FOTP-171 D3.

11.10 SAW CUT FIBER CABLE SHALL BE INSTALLED PER MANUFACTURES SPECIFICATIONS.

12.0 CONDUIT

12.1 EACH CABLE TYPE (POWER AND COMMUNICATIONS) SHALL BE RUN IN A SEPARATE CONDUIT AS SHOWN ON THE DRAWINGS.

12.2 MINIMUM CONDUIT SIZES ARE SHOWN ON DRAWINGS. CONTRACTOR SHALL VERIFY CONDUIT SIZES FOR COMPLIANCE TO NEC BASED ON ACTUAL WIRE RUNS.

12.3 USE MINIMUM 2"Ø RMC OR SOLVENT GLUED SCHEDULE 40 PVC FOR ALL UNDERGROUND CONDUITS.

12.4 USE RMC FOR ALL DAMP AND WET EXTERIOR ABOVE GRADE RACEWAYS.

12.5 USE POLYMER COATED RMC FOR ALL TRANSITIONS FROM HORIZONTAL THROUGH VERTICAL STUB-UPS.

12.6 USE RMC OR EMT FOR ALL EXTERIOR ABOVE GRADE RACEWAYS UNDER CANOPIES.

12.7 USE EMT FOR ALL INTERIOR RACEWAYS.

12.8 COMPRESSION TYPE FITTINGS SHALL BE USED WITH EMT WHERE EXPOSED TO WEATHER (OUTDOORS).

12.9 PROVIDE PULL STRINGS AND LABELS IN ALL EMPTY CONDUITS. CAP AND MAKE WATERTIGHT ALL EMPTY CONDUITS. ALL EMPTY CONDUIT STUB-UPS SHALL EXTEND 3" ABOVE FINISH SURFACE.

12.10 CONDUIT LOCATED UNDERGROUND IN ANY AREA OF VEHICULAR TRAFFIC MUST BE PLACED A MINIMUM OF 24" (OR PER LOCAL CODE) BELOW THE SURFACE. ALL OTHER UNDERGROUND CONDUIT MUST BE PLACED A MINIMUM OF 24" BELOW THE SURFACE.

12.11 CONDUIT SHALL BE ROUTED AROUND AND BENEATH ANCHOR BOLT REBAR CAGE AT FOUNDATIONS AS REQUIRED.

12.12 MYERS (GASKETED) HUBS SHALL BE USED FOR ALL CONDUIT PENETRATIONS INTO THE RSP, CONTROL BOX, BATTERY BOX, AND ALL JUNCTION BOXES.

12.13 DO NOT USE FLEX CONDUIT UNLESS SPECIFIED IN THE DESIGN DRAWINGS.

13.0 CONCRETE

13.1 ALL CONCRETE SHALL CONSIST OF PORTLAND CEMENT CONFORMING TO ASTM C150 TYPE IIA, HAVE A 4,500 PSI NOMINAL COMPRESSIVE STRENGTH, AGGREGATE SHALL COMPLY WITH ASTM C33-03, C88, C127, C131, C289, WATER TO CEMENT RATIO 0.42, ENTRAINED AIR CONTENT OF 6-8%, CLASS F FLY ASH CONFORMING TO ASTM 618-03 AND ASTM C311, 4" MAXIMUM SLUMP, UNLESS A SUPER-PLASTICIZER IS USED. (UNLESS OTHERWISE NOTED IN DRAWINGS)

13.2 AGGREGATE MATERIAL SHALL CONFORM WITH ASTM C33 AND SHALL BE FROM AN APPROVED SOURCE TO ENSURE UNIFORM QUALITY AND GRADING. DELIVER SO THAT MOISTURE CONTENT VARIATIONS WILL NOT DECREASE PRODUCTION OF REASONABLY UNIFORM CONCRETE.

13.3 MIXING, PLACING, FINISHING, AND CURING SHALL BE IN ACCORDANCE WITH DESIGN DOCUMENTS AND SECTION 303 OF THE STANDARD SPECIFICATIONS FOR PUBLIC WORKS CONSTRUCTION, LATEST EDITION.

13.4 REINFORCING STEEL BARS SHALL OVERLAP A MINIMUM OF 24 BAR DIAMETERS. REBAR SHALL BE 3" CLEAR TYPICAL AGAINST ALL GRADE AND 1 ½" CLEAR TYPICAL WHERE FORMED OR EXPOSED.

13.5 WHERE DOWELING VERTICALLY OR HORIZONTALLY INTO EXISTING CONCRETE, REBAR SHALL BE EPOXIED INTO EXISTING CONCRETE USING HILTI #HY-150 ADHESIVE. WHERE TRENCHING OCCURS ALONG AN EXISTING EXPANSION JOINT, REPLACE EXPANSION JOINT MATERIAL AND USE CONCRETE REBAR DOWELING AND APPLY ADHESIVE ONLY ON THE NON-EXPANSION JOINT SIDES.

13.6 NOMINALLY HORIZONTAL CONCRETE SURFACES EXPOSED TO WEATHER SHALL BE SLOPED FOR DRAINAGE.

13.7 ALL EXPOSED CONCRETE EDGES SHALL BE CHAMFERED 3/4".

13.8 GRINDING, PATCHING AND SACKING SHALL BE DONE TO ACHIEVE A UNIFORM SMOOTH SURFACE. FINAL FINISH ON ALL HORIZONTAL OR GENTLY SLOPED CONCRETE SURFACES SHALL HAVE A LIGHT BROOM FINISH. (ACS STANDARDS)

14.0 HOT MIX ASPHALT CONCRETE PAVING

14.1 PRIOR TO BEGINNING WORK, CONTACT THE OWNER/CITY OR COUNTY OFFICIAL TO COORDINATE TRAFFIC FLOW, WORK SCHEDULES AND UTILITY INTERFACES.

14.2 ALL ASPHALT AND BASE THICKNESS NOTED ARE COMPACTED THICKNESS.

14.3 SUBGRADE PREPARATION AND PLACEMENT OF BASE MATERIAL SHALL CONFORM TO THE RELATED SECTIONS IN THE STATE DOT STANDARD SPECIFICATIONS FOR ROAD CONSTRUCTION, LATEST EDITION.

14.4 ONE DAY PRIOR TO PLACEMENT OF BITUMINOUS MATERIAL ON THE BASE, THE SURFACE SHALL BE STERILIZED WITH A SOIL HERBICIDE.

15.0 GROUT

15.1 ALL GROUT IN CONCRETE SAW-CUTS SHALL BE HIGH-STRENGTH, 5,000 PSI, NON-SHRINK PER ASTM C1107.

15.2 DUE TO POSSIBLE HIGH GROUND WATER, CDF IS NOT ALLOWED, USE CONCRETE.

16.0 MISC HARDWARE

16.1 ALL CARBON STEEL NUTS, BOLTS, AND WASHERS SHALL BE GALVANIZED PER ASTM A563.

16.2 RPM ANCHOR BOLTS SHALL BE ASTM F 1554 GRADE 55. ANCHOR BOLT NUTS SHALL BE ASTM DH. ALL COMPONENTS SHALL MEET ASTM A153.

16.3 BOOTH ANCHOR BOLTS SHALL BE HILTI-TZ RODS INSTALLED PER THE MANUFACTURER'S INSTRUCTIONS WITH HILTI-HY 150 ADHESIVE.

16.4 ALL STAINLESS STEEL NUTS, BOLTS AND WASHERS SHALL BE ASTM SERIES 300 (UNLESS OTHERWISE NOTED).

16.5 ALL GALVANIZED BOLTS SHALL BE A307 OR SAE GRADE 5, WITH ASTM A563 GRADE A CLASS 2B HEX NUTS AND ASTM F436 FLAT CIRCULAR PLAIN WASHERS FOR OVERHEAD STRUCTURE AND ALL ASSOCIATED ELECTRICAL EQUIPMENT (UNLESS OTHERWISE NOTED).

16.6 FIELD VERIFY ALL DIMENSIONS OF THE EQUIPMENT BEING MOUNTED PRIOR TO INSTALLATION. FIELD DRILL OR SHOP DRILL ALL SURFACES TO MATCH EQUIPMENT.

16.7 CONTRACTOR SHALL PROVIDE AND INSTALL ALL REQUIRED EQUIPMENT AND MATERIAL NOT SPECIFICALLY IDENTIFIED AS GFE.

16.8 CONTRACTOR SHALL PROVIDE AND INSTALL ALL MISCELLANEOUS HARDWARE REQUIRE TO COMPLETE RPM INSTALLATION (EVEN IF NOT SHOWN IN THE DRAWINGS).

16.9 ALL NUTS REQUIRE FULL BOLT THREAD ENGAGEMENT.

17.0 LIGHTNING PROTECTION

17.1 LIGHTNING PROTECTION OF RPM EQUIPMENT IS BASED ON A GRADED APPROACH. SPECIFIC GUIDANCE FOR MEASURES REQUIRED TO MITIGATE DAMAGE FROM LIGHTNING INDUCED SURGES IS PROVIDED IN THE DRAWINGS AND TECHNICAL SPECIFICATIONS.

17.2 ALL RPM STANDS SHALL BE BONDED AND GROUNDED TO A COPPER OR COPPER COATED STEEL GROUNDING ROD OR PLATE (LOCAL CODES SHALL APPLY).

17.3 ALL NEW POWER PANELS SHALL BE EQUIPPED WITH INTEGRATED SURGE SUPPRESSION CERTIFIED PER UL1449.

17.4 RPM SHROUDS ARE INHERENTLY HARDENED AGAINST EFFECTS OF LIGHTNING. NO ADDITIONAL LIGHTNING PROTECTION/ATTRACTION (AIR TERMINALS) EQUIPMENT IS REQUIRED.

17.5 SURGE PROTECTION DEVICES SHALL BE PROVIDED TO BOTH TERMINATIONS OF EACH ETHERNET CAT 6 CABLE FROM OUTSIDE COMPONENTS.

17.6 CONTRACTOR TO USE 110 PUNCH DOWN BLOCK TOOL TO LAND WIRES TO SPD. SPD TO BE SECURELY MOUNTED AND TIE DOWN CABLES USED TO PREVENT WIRE MOVEMENT.

17.7 FOR OUTDOOR SPD INSTALL IN NEAREST COMMUNICATION JB. DRILL HOLE IN BOTTOM OF WALL OF JB AND INSTALL STRAIN RELIEF CONNECTOR MAINTAINING NEMA 4 RATING OF BOX. ROUTE BARE SOLID OR JACKETED GREEN #6 COPPER GROUNDING WIRE THROUGH STRAIN RELIEF.

17.8 FOR INDOOR SPD GROUND PER MANUFACTURER'S INSTRUCTIONS WITH #6 STRANDED COPPER WIRE TO NEAREST EARTH GROUND.

18.0 DESIGN CRITERIA

18.1 DESIGN DRAWINGS ARE BASED ON HORIZONTAL LOADS AS FOLLOWS: WIND LOADS BASED ON A 110 MPH 3-SECOND GUST WITH IMPORTANCE FACTOR OF 1.00 AND EXPOSURE C, SEISMIC LOAD OF SS=1.282, S1=0.497, AND CS=0.342 WITH AN ALLOWABLE SOIL PRESSURE OF 1500 PSF.

18.2 DESIGN DRAWINGS ARE BASED ON A LIGHTNING FLASH DENSITY AS DEFINED BY NFPA 780 OF 1 FLASHES/KM2/YEAR, CORRESPONDING TO A LOW RISK.

18.3 ELECTRICAL CONDUCTOR SIZE IS BASED ON A 3.5A MAXIMUM CURRENT DRAW AT 120VAC FOR RPMS AND SHALL BE SIZED TO PREVENT A VOLTAGE DROP NOT TO EXCEED 3% FOR FEEDER CIRCUITS AND 2% FOR BRANCH CIRCUITS.

19.0 METAL FINISHES

19.1 ALL GALVANIZED ITEMS SHALL BE "HOT DIPPED" GALVANIZED, 2.0 OUNCES PER SQUARE FOOT, AFTER FABRICATION. ALL WELDED AREAS, AND ALL AREAS WHERE GALVANIZED SURFACE HAS BROKEN FOR ANY REASON, SHALL BE REPAIRED WITH "GALVALOY" OR APPROVED EQUAL, APPLIED ACCORDING TO MANUFACTURER'S SPECIFICATIONS.

19.2 ALL EXPOSED CARBON STEEL TO BE HOT DIPPED GALVANIZED. EXCEPT WHERE DRAWINGS STATE OTHERWISE.

20.0 TRAFFIC BARRIER

20.1 K-RAILS: CONCRETE TRAFFIC BARRIERS SHALL MEET STATE DOT REQUIREMENTS AS APPLICABLE.

20.2 ALL K-RAILS SHALL BE PINNED ACCORDING TO STATE DOT REQUIREMENTS AS APPLICABLE, OR AT A MINIMUM USING 1"ø X 24" PINS, MINIMUM OF 4 PER K-RAIL 12'-6" AND LESS, MINIMUM 6 PER K-RAIL OVER 12'-6", UNLESS OTHERWISE NOTED.

20.3 ALL K-RAILS SHALL BE PROVIDED WITH PRECAST PIN POCKETS, AS REQUIRED.

21.0 HOLD POINTS

21.1 PNNL OBSERVES DELIVERY OF RPM EQUIPMENT AND BOOTH.

21.2 LAYOUT INSPECTION (INCLUDING MARK AND LOCATE) AND APPROVAL PRIOR TO COMMENCEMENT OF EXCAVATION (IF EXCAVATION OR TRENCHING IS REQUIRED).

21.3 PNNL OBSERVES SITE PREPARATION FOR FOUNDATION EXCAVATION AND ASSEMBLY INSPECTION PRIOR TO SCHEDULING CONCRETE (IF FOUNDATION MODIFICATIONS ARE REQUIRED).

21.4 CONCRETE STRENGTH TEST INSPECTION PRIOR TO SETTING UP RPM STANDS (IF CONCRETE IS REQUIRED)

21.5 PNNL OBSERVES TRENCH EXCAVATION INSPECTION PRIOR TO FILLING TRENCH (IF TRENCHING IS REQUIRED).

21.6 PNNL OBSERVES SITE PREPARATION FOR CONCRETE PLACEMENT.

21.7 PNNL OBSERVES SITE PREPARATION FOR HMAC PLACEMENT.

21.8 ALL WIRE AND CABLE TO BE INSPECTED PRIOR TO INSTALLATION.

21.9 PNNL OBSERVES COMPLETED ELECTRICAL BEFORE CONCEALMENT.

21.10 PNNL REVIEWS ELECTRICAL TEST REPORTS (POWER AND SIGNAL CABLE) BEFORE ELECTRICAL CONTRACTOR IS RELEASED.

21.11 PNNL REVIEWS FIBER TEST REPORTS BEFORE FIBER CONTRACTOR IS RELEASED.

22.0 SPECIAL INSPECTIONS

FOLLOWING LIST AND TABLE DESCRIBES WORK ACTIVITIES THAT REQUIRE SPECIAL INSPECTION. SPECIAL INSPECTIONS ARE THE RESPONSIBILITY OF THE CONTRACTOR AND SHALL BE PERFORMED BY QUALIFIED, AND AS APPLICABLE, CERTIFIED PERSONNEL PER IBC, CHAPTER 17 AND/OR CONTRACT DOCUMENTS. SPECIAL INSPECTION IS NOT A SUBSTITUTE FOR INSPECTION REQUIRED BY LOCAL JURISDICTIONS. INSPECTIONS AND TESTS SHALL BE DOCUMENTED AND PROVIDED TO PNNL PRIOR TO REQUESTING ACCEPTANCE OF WORK.

SEE SPECIAL INSPECTIONS TABLE(S) AS NOTED:

22.1	CONCRETE:	NONE
22.2	STEEL:	NONE
22.3	POST-INSTALLED ANCHORS:	SEE SHEET 7
22.4	SOILS:	NONE

PAUL M. GIEVER
STATE OF WASHINGTON
28084
STRUCTURAL ENGINEER
PROFESSIONAL ENGINEER
4/18/16

UNCLASSIFIED

Meier ARCHITECTURE • ENGINEERING
Job No: 7833
www.meierinc.com
8697 Gage Boulevard
Kennewick, WA 99336
P: 509.735.1589
F: 509.783.5075

PORT OF TACOMA – PCT
STRADDLE CARRIER PORTAL
GENERAL NOTES

ISSUE DATE	CROSSING CODE	SCALE	SIZE	DWG NO	DWG CODE	SHEET NO	SHEETS	REV
4/18/16	17031	NONE	F	WS8933		2	25	1

\PROJECTS\7800\7833 Tacoma Straddle Carrier\DWG\WS8933_02_1.dwg - Apr 18,2016 - 02:37pm - mtd

Apr 18, 2016 ~ 02:37pm ~ mtdavalle

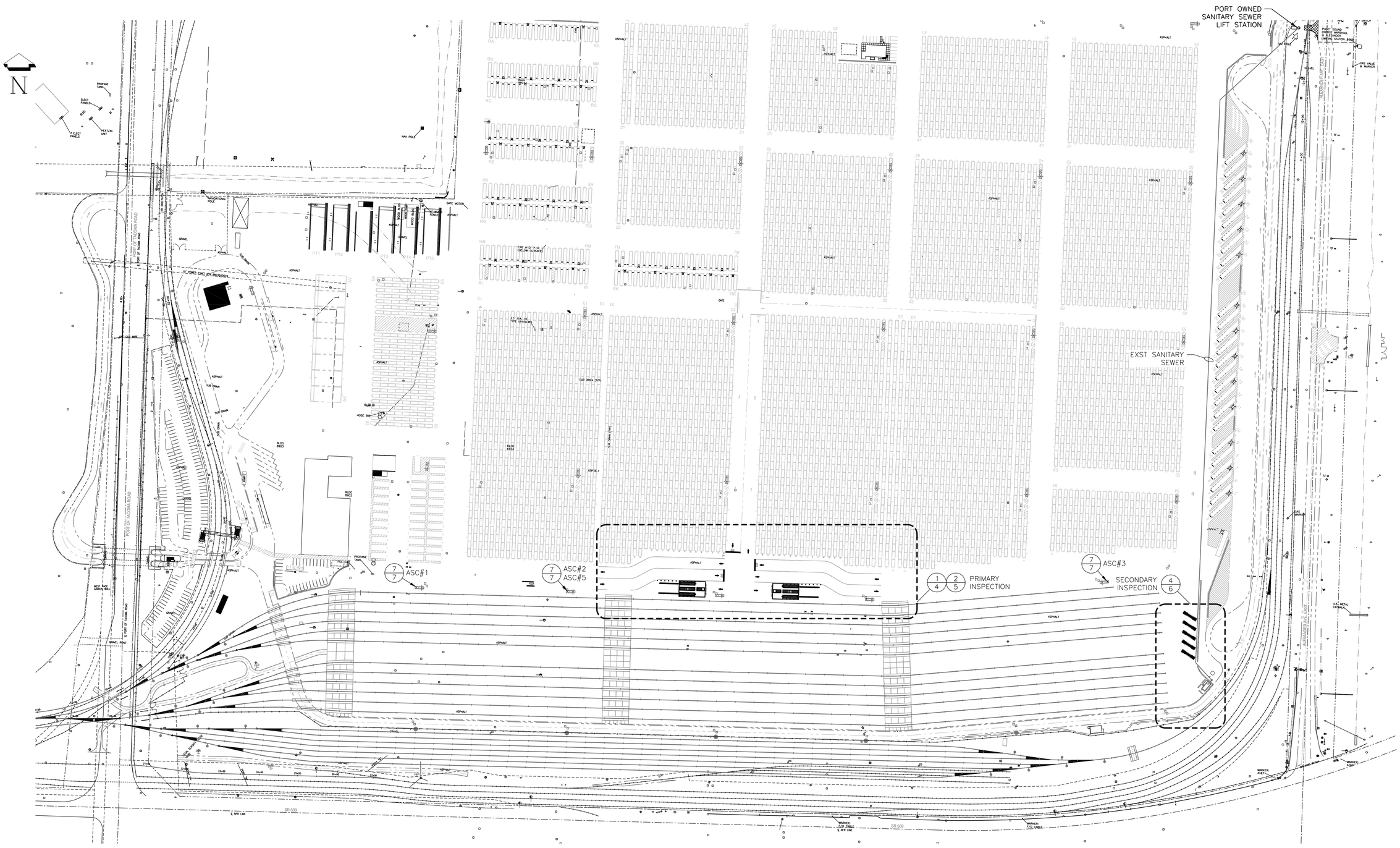

SITE PLAN

1" = 100' 0' 50' 100' 200' 300'
SCALE FEET

UNCLASSIFIED

Meier ARCHITECTURE • ENGINEERING
Job No: 7833
www.meierinc.com
8697 Gage Boulevard
Kennewick, WA 99336
P: 509.735.1589
F: 509.783.5075

PORT OF TACOMA – PCT STRADDLE CARRIER PORTAL SITE PLAN

ISSUE DATE	CROSSING CODE	SCALE
4/18/16	17031	SHOWN

SIZE	DWG NO	DWG CODE	SHEET NO	SHEETS	REV
F	WS8933		3	25	1

PAUL M. GIEVER — STATE OF WASHINGTON — 28084 — PROFESSIONAL ENGINEER
4/18/16

Apr 18, 2016 ~ 02:37pm ~ mtdavalle

\PROJECTS\78000\7833 Tacoma Straddle Carrier\DWG\WS8933_03_1.dwg - Apr 18,2016 - 02:37pm - mtd

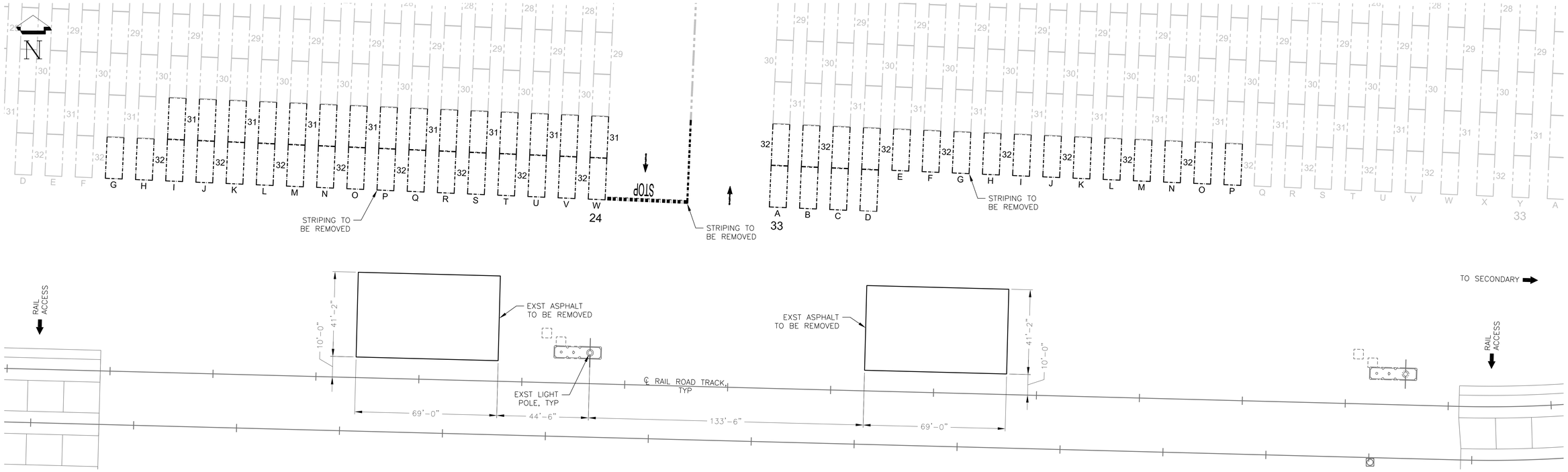

1/3 DEMOLITION PLAN

1" = 20' SCALE 0' 10' 20' 40' 60' FEET

UNCLASSIFIED

Meier ARCHITECTURE • ENGINEERING

Job No: 7833

www.meierinc.com

8697 Gage Boulevard
Kennewick, WA 99336
P: 509.735.1589
F: 509.783.5075

PAUL M. GIEVER
STATE OF WASHINGTON
28084
PROFESSIONAL ENGINEER
4/18/16

PORT OF TACOMA – PCT STRADDLE CARRIER PORTAL DEMOLITION PLAN

ISSUE DATE	CROSSING CODE	SCALE
4/18/16	17031	SHOWN

SIZE	DWG NO	DWG CODE	SHEET NO	SHEETS	REV
F	WS8933		4	25	1

\PROJECTS\78001\7833 Tacoma Straddle Carrier\DWG\WS8933_04_1.dwg - Apr 18,2016 - 02:37pm - mtd

Apr 18, 2016 ~ 02:37pm ~ mtdavalle

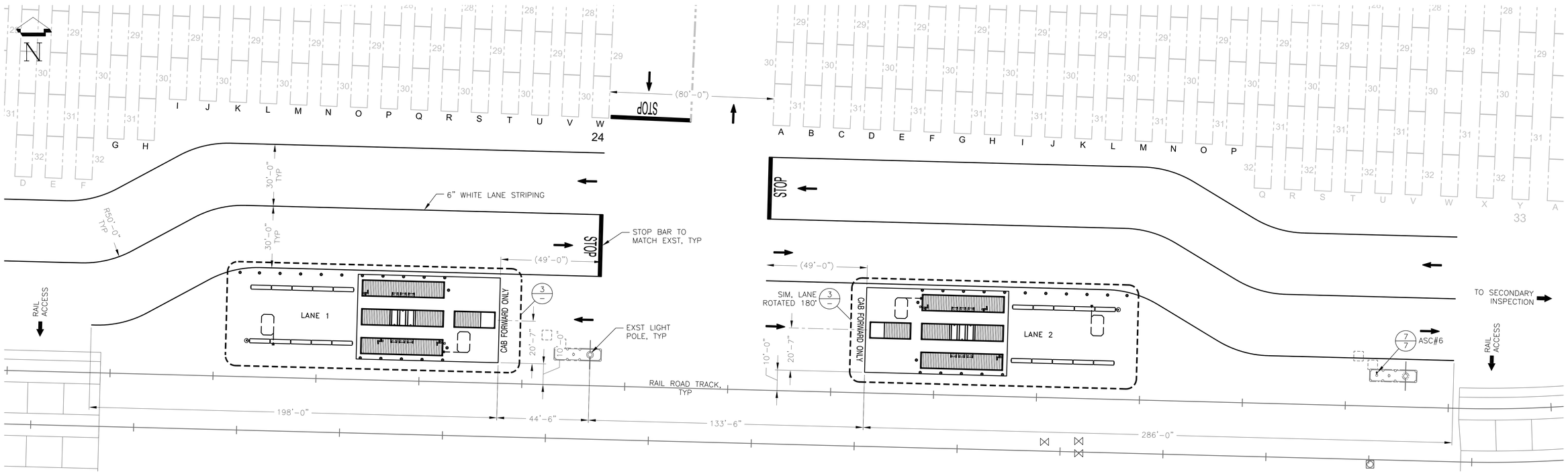

2/3 ENLARGED SITE PLAN

1" = 20' SCALE 0' 10' 20' 40' 60' FEET

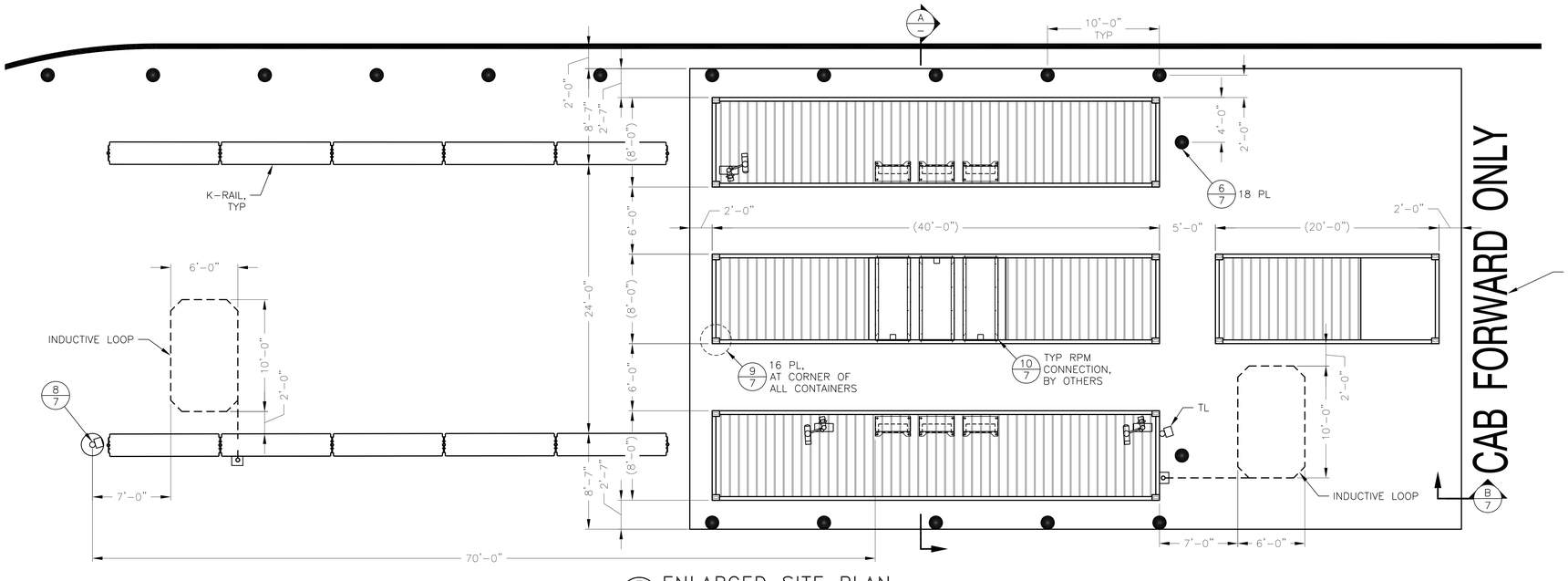

3/1 ENLARGED SITE PLAN

1" = 5' SCALE 0' 5' 10' 15' FEET

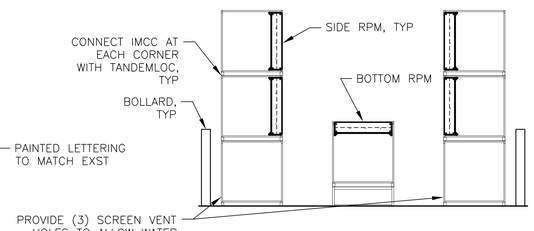

A/- SCP SECTION

1" = 5' SCALE 0' 5' 10' 15' FEET

UNCLASSIFIED

Meier ARCHITECTURE • ENGINEERING
Job No: 7833
www.meierinc.com
8697 Gage Boulevard
Kennewick, WA 99336
P: 509.735.1589
F: 509.783.5075

PORT OF TACOMA – PCT STRADDLE CARRIER PORTAL ENLARGED SITE PLAN

ISSUE DATE	CROSSING CODE	SCALE
4/18/16	17031	SHOWN

SIZE	DWG NO	DWG CODE	SHEET NO	SHEETS	REV
F	WS8933		5	25	1

PAUL M. GIEVER, STATE OF WASHINGTON, 28084, GENERAL ENGINEER, PROFESSIONAL ENGINEER
4/18/16

\PROJECTS\78000\7833 Tacoma Straddle Carrier\DWG\WS8933_05_1.dwg - Apr 18,2016 - 02:37pm - mtd

Apr 18, 2016 ~ 02:37pm ~ mtdavalle

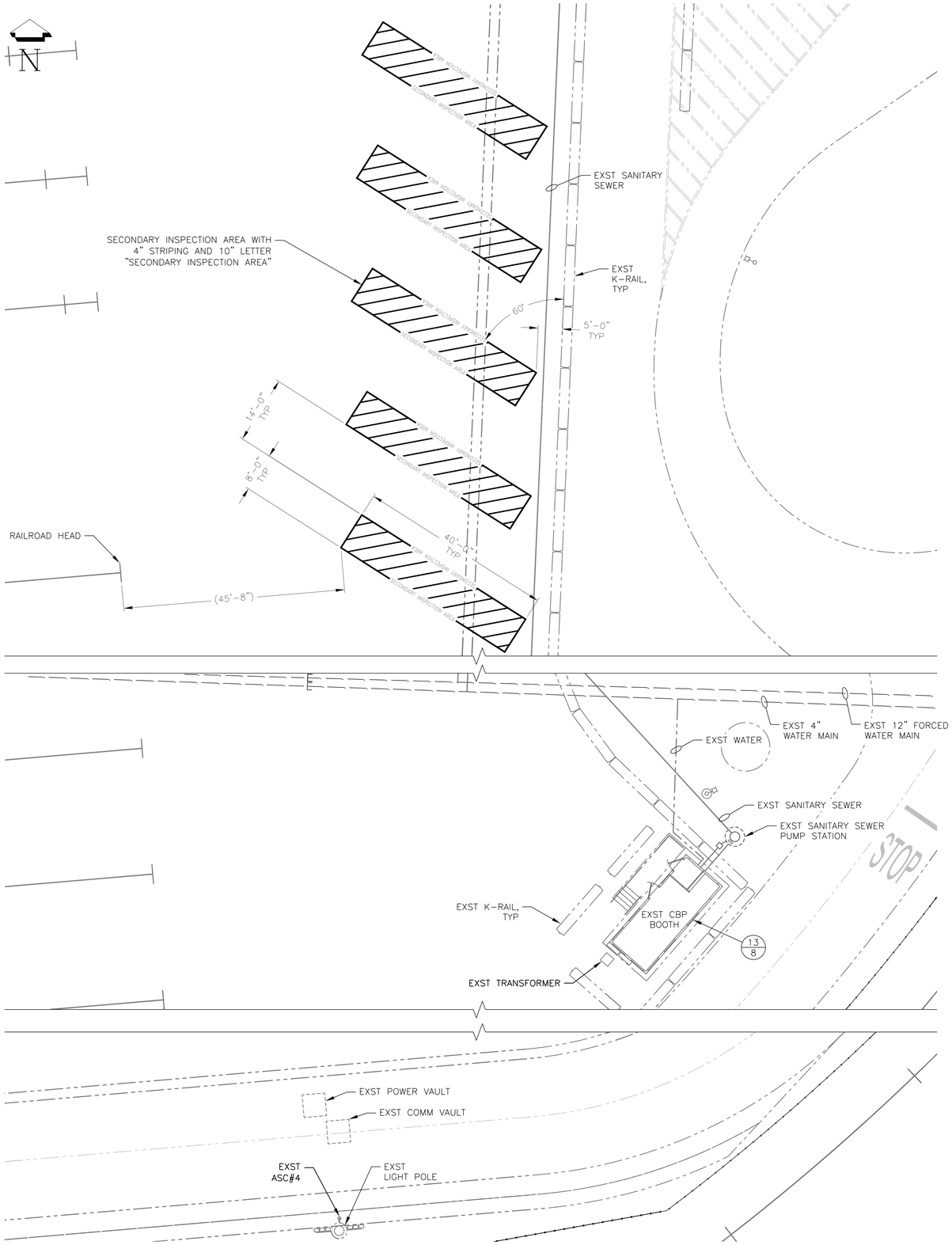

4/3 ENLARGED SITE PLAN – SECONDARY

1" = 10' 0' 5' 10' 20' 30' SCALE FEET

UNCLASSIFIED

Meier ARCHITECTURE • ENGINEERING
Job No: 7833
www.meierinc.com
8697 Gage Boulevard
Kennewick, WA 99336
P: 509.735.1589
F: 509.783.5075

PORT OF TACOMA – PCT
STRADDLE CARRIER PORTAL
ENLARGED SITE PLAN

PAUL M. GIEVER, STATE OF WASHINGTON, 28084, STRUCTURAL ENGINEER, PROFESSIONAL ENGINEER
4/18/16

ISSUE DATE	CROSSING CODE	SCALE
4/18/16	17031	SHOWN

SIZE	DWG NO	DWG CODE	SHEET NO	SHEETS	REV
F	WS8933		6	25	1

I:\PROJECTS\7800\7833 Tacoma Straddle Carrier\DWG\WS8933_06_1.dwg - Apr 18,2016 - 02:37pm - mtd
Apr 18, 2016 ~ 02:37pm ~ mtdowle

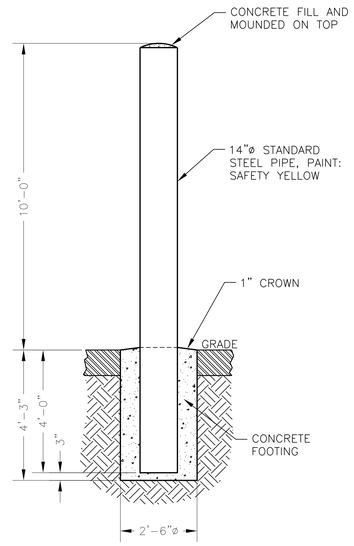

6/5 14" BOLLARD DETAIL

1/2" = 1'-0" SCALE 0' 1' 2' 4' 6' FEET

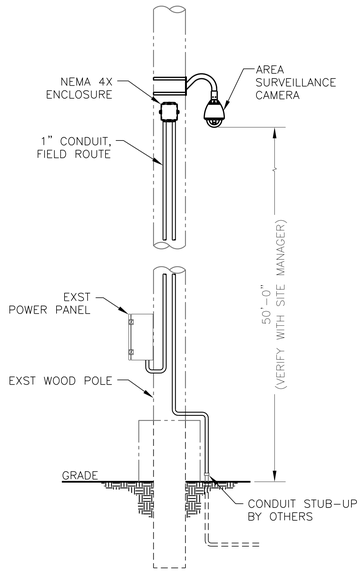

7/4,5,6 SURVEILLANCE CAMERA

1/2" = 1'-0" SCALE 0' 1' 2' 4' 6' FEET

NOTE:
1.) CAMERA TO BE MOUNTED ON NORTH SIDE OF EXST POLE.
2.) NUMBER OF CAMERAS MAY VARY.

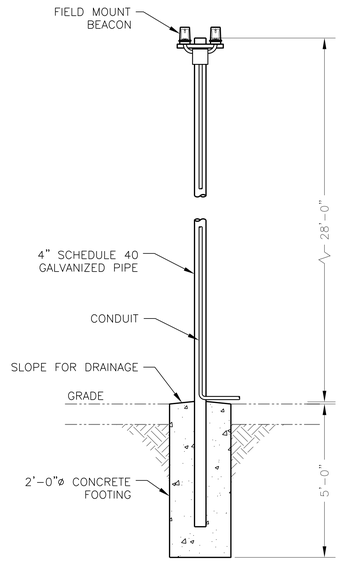

8/5 BEACON MAST DETAIL

1/2" = 1'-0" SCALE 0' 1' 2' 4' 6' FEET

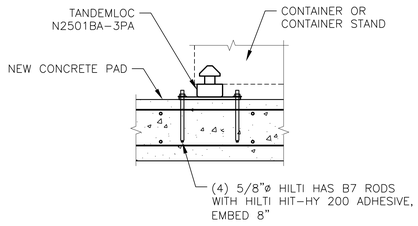

9/5 CONTAINER ANCHOR DETAIL

1" = 1'-0" SCALE 0' 6" 1' 2' 3' FEET

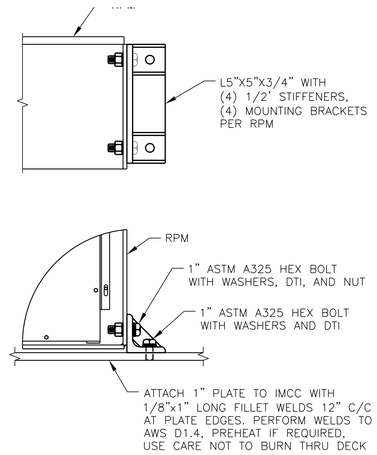

(FOR REFERENCE ONLY)

10/5 RPM ATTACHMENT DETAIL

1" = 1'-0" SCALE 0' 6" 1' 2' 3' FEET

NOTE:
1.) RPM MOUNTING BRACKET BY OTHERS.

SPECIAL INSPECTION OF POST-INSTALLED ANCHORS

VERIFICATION AND INSPECTION	INSPECTION: CONTINUOUS	INSPECTION: PERIODIC	REFERENCES
1. INSPECT AND RECORD THE FOLLOWING AT TIME OF INSTALLATION: PRODUCT DESCRIPTION INCLUDING PRODUCT NAME, ADHESIVE EXPIRATION DATE, CONCRETE TYPE AND STRENGTH, ANCHOR DIAMETER AND STEEL GRADE, COMPLIANCE OF DRILL BIT WITH ICBO REPORT, HOLE DIAMETER AND LOCATION, CLEANLINESS OF HOLE AND ANCHOR AND ANCHOR EMBEDMENT.	–	X	PER MANUFACTURER'S ICC EVALUATION REPORT

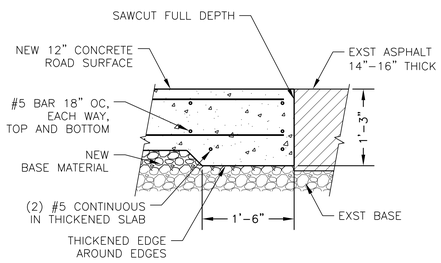

B/5 CONCRETE PAD SECTION

1" = 1'-0" SCALE 0' 6" 1' 2' 3' FEET

UNCLASSIFIED

Meier ARCHITECTURE • ENGINEERING
Job No: 7833
www.meierinc.com
8697 Gage Boulevard
Kennewick, WA 99336
P: 509.735.1589
F: 509.783.5075

PORT OF TACOMA – PCT STRADDLE CARRIER PORTAL SECTIONS AND DETAILS

ISSUE DATE	CROSSING CODE	SCALE
4/18/16	17031	SHOWN

SIZE	DWG NO	DWG CODE	SHEET NO	SHEETS	REV
F	WS8933		7	25	1

PAUL M. GIEVER — STATE OF WASHINGTON — 28084 — REGISTERED PROFESSIONAL ENGINEER
4/18/16

\PROJECTS\180017833 Tacoma Straddle Carrier\DWG\WS8933_07_1.dwg - Apr 18,2016 - 02:37pm - mtd

Apr 18, 2016 ~ 02:37pm ~ mtdavolle

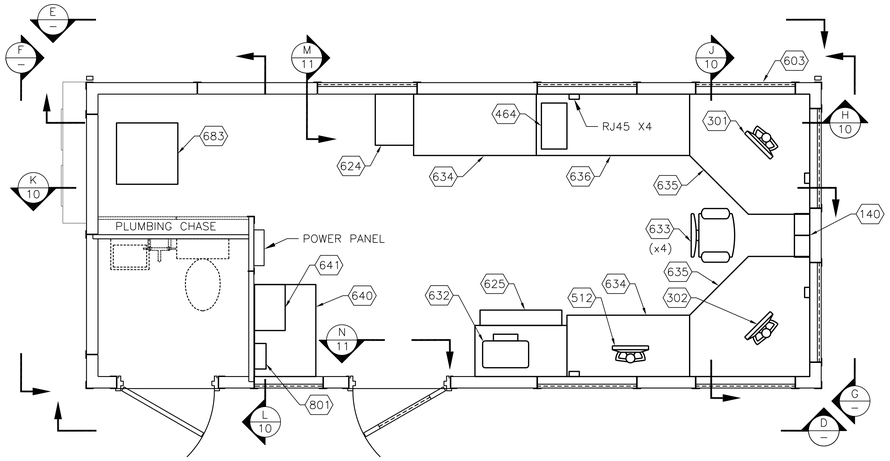

13/6 CBP BOOTH LAYOUT

1/2" = 1'-0" SCALE 0' 1' 2' 4' 6' FEET

NOTE:
1.) FOUNDATION, LANDING, AND STAIR NOT SHOWN.

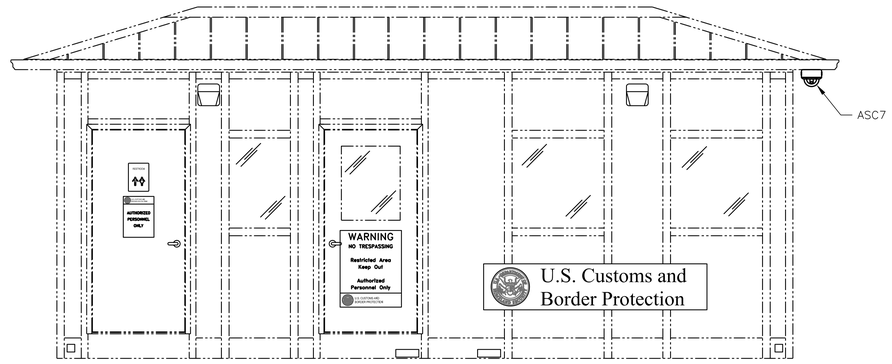

D EXTERIOR ELEVATION

1/2" = 1'-0" SCALE 0' 1' 2' 4' 6' FEET

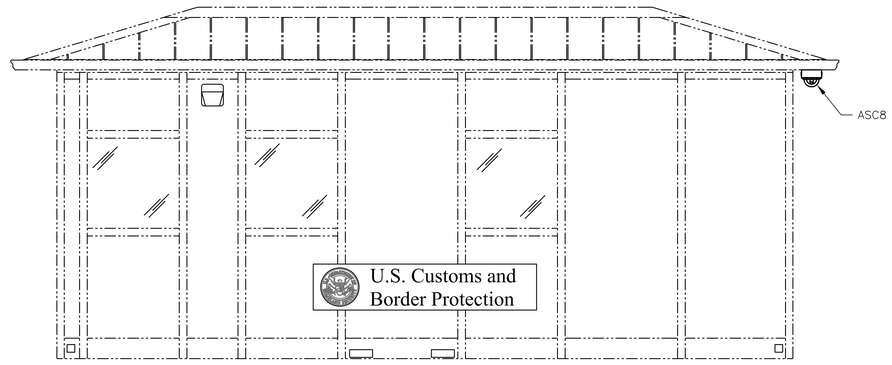

E EXTERIOR ELEVATION

1/2" = 1'-0" SCALE 0' 1' 2' 4' 6' FEET

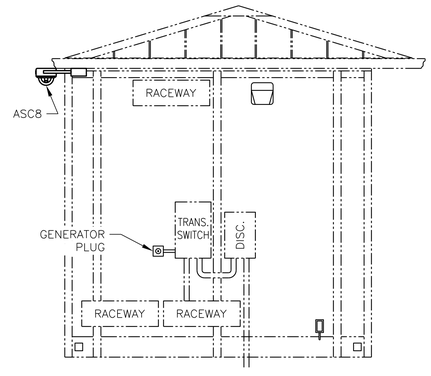

F EXTERIOR ELEVATION

1/2" = 1'-0" SCALE 0' 1' 2' 4' 6' FEET

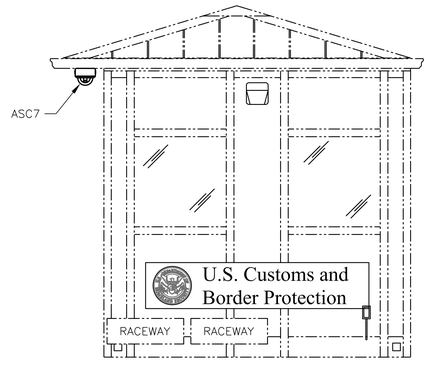

G EXTERIOR ELEVATION

1/2" = 1'-0" SCALE 0' 1' 2' 4' 6' FEET

PN	DESCRIPTION
140	ANNUNCIATOR
301	MONITOR COMPUTER
302	CBP WORKSTATION COMPUTER
464	HMI
512	AREA SURVEILLANCE CAMERA MONITOR
603	BOOTH ASSEMBLY – LEFT HANDED
624	4 DRAWER FILE CABINET
625	TWO DRAWER CABINET
626	MOBILE PEDESTAL – BOX/BOX/FILE (NOT SHOWN)
627	WALL CLOCK – 10" (NOT SHOWN)
628	WASTE BASKET (NOT SHOWN)
630	MULTI–LINE TELEPHONE (NOT SHOWN)
631	LIGHT, CLIP–ON DESK (NOT SHOWN)
632	PRINTER STAND
633	TASK CHAIR
634	DESK – 4'–0" SECTION
635	DESK – CORNER SECTION
636	DESK – 5'–0" SECTION
640	REFRIGERATOR
641	MICROWAVE
652	MOBILE CPU STAND (NOT SHOWN)
683	EQUIPMENT CABINET
801	DOOR ACCESS CONTROLLER

NOTES:
1.) PART NUMBERS SHOWN FOR REFERENCE ONLY. SEE EQUIPMENT SCHEDULE FOR DESCRIPTION AND QUANTITY.

UNCLASSIFIED

Meier ARCHITECTURE • ENGINEERING
Job No: 7833
www.meierinc.com
8697 Gage Boulevard
Kennewick, WA 99336
P: 509.735.1589
F: 509.783.5075

PORT OF TACOMA – PCT STRADDLE CARRIER PORTAL BOOTH PLAN AND ELEVATIONS

ISSUE DATE	CROSSING CODE	SCALE	
4/18/16	17031	SHOWN	

SIZE	DWG NO	DWG CODE	SHEET NO	SHEETS	REV
F	WS8933		8	25	1

\PROJECTS\78007833 Tacoma Straddle Carrier\DWG\WS8933_08_1.dwg - Apr 18,2016 - 02:37pm - mtd
Apr 18, 2016 ~ 02:37pm ~ mtdavolle

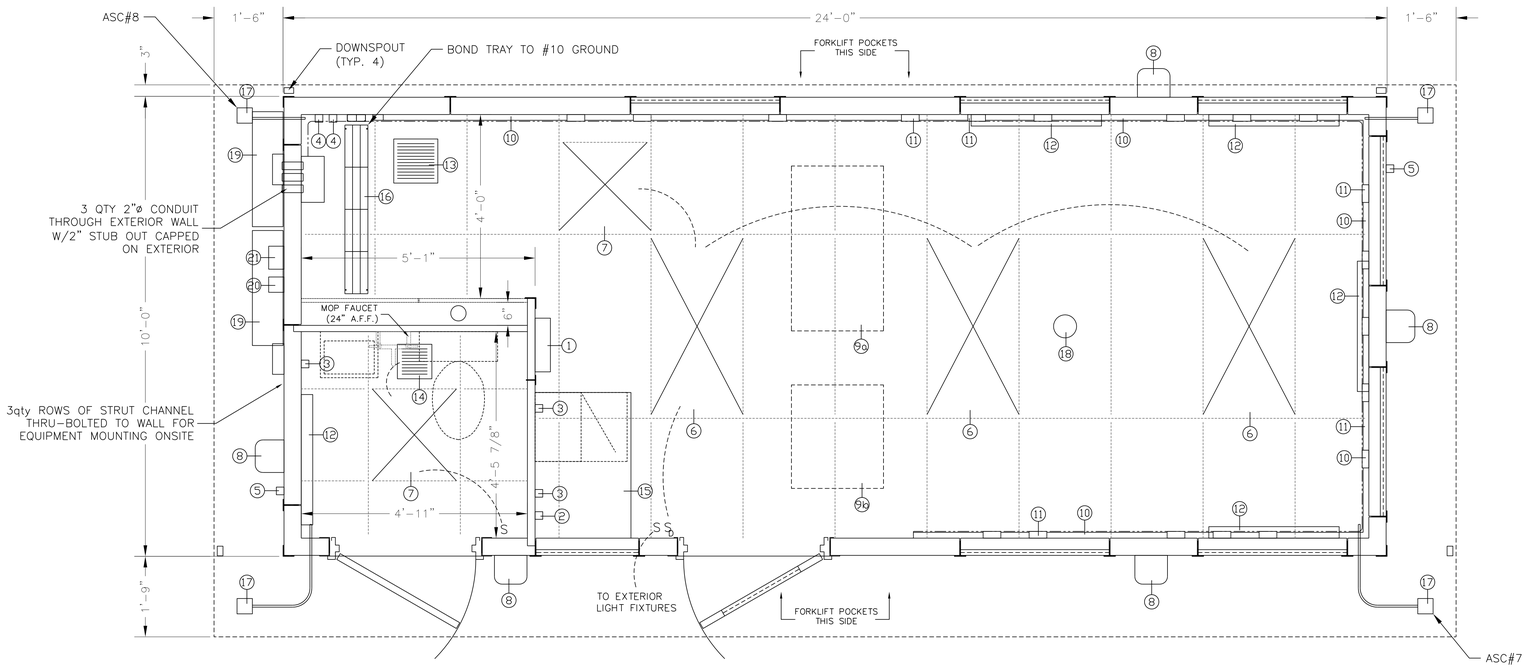

DURALUMINUM MODEL BR288120SW BUILDING NOTES:

1 — 200 AMP, SINGLE PHASE 40 CIRCUIT LOAD CENTER w/ MAIN BREAKER (QO140M200) (INCLUDES A TWO POLE TVSS SURGE SUPPRESSION BREAKER)
2 — 115V, 20 AMP DUPLEX OUTLET (18" A.F.F.)
3 — 115V, 20 AMP GFI DUPLEX OUTLET
4 — 115V, NEMA L5-30R OUTLET ON DEDICATED CIRCUITS
5 — 115V, 20 AMP EXTERIOR GFI DUPLEX OUTLET w/ WEATHER PROOF COVER
6 — 64 WATT RECESSED FLUORESCENT T-8 TROFFER w/ DIMMER SWITCH
7 — 34 WATT RECESSED FLUORESCENT T-8 TROFFER w/ SWITCH
8 — EXTERIOR WALL PACK LIGHT w/ MOTION SENSOR & SWITCH
9a — 24,000 BTU SLIM DUCT AIR HANDLER INSTALLED & DUCTED IN PLENUM
9b — 12,000 BTU SLIM DUCT AIR HANDLER INSTALLED & DUCTED IN PLENUM
10 — 4"x2" STEEL WIRE MOLD w/ DIVIDER & COVER FOR DATA & SIGNAL (G4000) w/ 16QTY RJ-45 JACKS & CAT6 CABLE TO CABLE TRAY (3' WHIP AT JACK, 15' WHIP AT TRAY)
11 — STEEL WIRE MOLD w/ 115V DUPLEX OUTLETS (G-3000) 1-RUN ABOVE SHELF, WIRED TO LOAD CENTER, 1-RUN UNDER SHELF WIRED CORD & PLUG
12 — LIQUID FILLED ELECTRIC BASE BOARD HEATER
13 — 115V, 160 CFM THERMOSTATICALLY CONTROLLED EXHAUST FAN
14 — 115V, 80 CFM EXHAUST FAN (WIRED TO RESTROOM LIGHT)
15 — KITCHENETTE w/ BASE CABINET, COUNTER, WALL MOUNTED CABINET & SPACE FOR FRIDGE
16 — 6" WIDE WIRE CABLE TRAY SUSPENDED FROM CEILING FOR COMMUNICATION CABLES
17 — EXTERIOR 4"x4" BLANK J-BOX w/ CONDUIT & PULL WIRE TO CEILING PLENUM INSIDE BUILDING
18 — 115V HARD WIRED SMOKE DETECTOR w/ BATTERY BACKUP
19 — EXTERIOR 8"x8"x30" NEMA 4 STEEL RACEWAY FOR POWER & COMMUNICATION CONNECTIONS
20 — EXTERIOR BLANK J-BOX w/ 2" CONDUIT & PULL WIRE TO LOAD CENTER FOR POWER FEED
21 — EXTERIOR BLANK J-BOX w/ 2qty 2" CONDUITS & PULL WIRE TO LOAD CENTER
22 — EXTERIOR MANUAL TRANSFER SWITCH WITH POWER INLET (NOT SHOWN, SHIPS LOOSE)
23 — EXTERIOR 200 AMP SINGLE POLE MAIN DISCONNECT SWITCH (NOT SHOWN, SHIPS LOOSE)
24 — EXTERIOR HVAC COMPRESSOR UNIT (NOT SHOWN, SHIPS LOOSE)

* EXTERIOR ROOF STANDING SEAM ROOF (MEDIUM BRONZE) w/ 3" OVERHANG (SIDE A) 18" OVERHANG (SIDES B,D) & 21" OVERHANG (SIDE C) (SHIPS INSTALLED)
* DOWN SPOUTS (TYP. 4) SHIP LOOSE
* BULLET RESISTANT UL 752 LEVEL 3 CONSTRUCTION
* 90" INTERIOR CEILING HEIGHT
* ACOUSTICAL DROP CEILING (TILE CUT TO SIZE BY PORTAKING, TILE TO BE INSTALLED BY OTHERS)
* 3068 STEEL BULLET RESISTANT UL 752 LEVEL 3 DOOR & STEEL FRAME, VISION LITE w/THE FOLLOWING HARDWARE:
  - NBCH-L44 CONTINUOUS HINGE
  - GLYNN JOHNSON #64 SILENCERS
  - VON DUPRIN 9975 x NL x 626 MORTISE EXIT DEVISE
  - BEST GREEN CONSTRUCTION CORE
  - VON DUPRIN 6211 x FSE x 12VDC x 32 ELECTRIC STRIKE
  - LCN DOOR CLOSER w/ HOLD OPEN ARM
* 3068 FLUSH STEEL BULLET RESISTANT UL 752 LEVEL 3 DOOR & STEEL FRAME w/ LEVER LOCKSET, BEST GREEN CONSTRUCTION CORE & LCN CLOSER
* GLAZING: BULLET RESISTANT UL 752 LEVEL 3 GRAY TINTED POLYCARBONATE
* MINI BLINDS FOR ALL WINDOWS
* INSULATION: WALLS R-19, FLOOR R-30 & CEILING R-30
* INTERIOR PANEL FINISH: DIAMOND EMBOSSED ALUMINUM COVERED DRYWALL
* SUBFLOOR: 2 LAYERS OF 3/4" ADVANTECH OSB
* RAISED RUBBER DISK FLOOR (GRAY)
* FORKLIFT POCKETS IN BASE w/ COVERS (SIDES A & C)
* CRANE LIFTING POCKETS IN BASE w/ COVERS (ALL FOUR CORNERS)
* THREE ROWS OF STRUT CHANNEL THRU-BOLTED TO WALL (SIDE C) FOR MOUNTING EQUIPMENT ONSITE
* EXTERIOR HVAC UNIT SHIPS INSIDE OF BUILDING, TO BE INSTALLED ON SITE BY OTHERS

* PLUMBING ITEMS SHIPPED INSTALLED & PLUMBED TO INCLUDE:
- PAPER TOWEL DISPENSER
- TOILET w/ TANK (FLOOR MOUNTED, REAR DISCHARGE)
- SURFACE MOUNTED WALL CABINET w/ MIRROR
- LIQUID SOAP DISPENSER
- INSTANTANEOUS WATER HEATER
- SINK w/ FAUCET (12"x15")
- TISSUE HOLDER
- HOT/COLD MOP SINK FAUCET (24" A.F.F.)
- 2QTY. 5lb. ABC FIRE EXTINGUISHERS
- WALL MOUNTED COAT HANGER w/ HAT SHELF

10'x24' CBP BOOTH PLAN

3/4" = 1'-0" 0' 1' 2' 4' SCALE FEET

DETAILS ON THIS SHEET PROVIDED FOR REFERENCE ONLY. BOOTH COMPONENTS SHOWN TO BE PROVIDED BY BOOTH MANUFACTURER.

PAUL M. GIEVER — STATE OF WASHINGTON — 28884 — STRUCTURAL ENGINEER — PROFESSIONAL ENGINEER
4/18/16

UNCLASSIFIED

Meier ARCHITECTURE • ENGINEERING
Job No: 7833
www.meierinc.com
8697 Gage Boulevard
Kennewick, WA 99336
P: 509.735.1589
F: 509.783.5075

PORT OF TACOMA – PCT STRADDLE CARRIER PORTAL BOOTH PLAN

ISSUE DATE	CROSSING CODE	SCALE
4/18/16	17031	SHOWN

SIZE	DWG NO	DWG CODE	SHEET NO	SHEETS	REV
F	WS8933		9	25	1

\PROJECTS\7800\7833 Tacoma Straddle Carrier\DWG\WS8933_09_1.dwg - Apr 18,2016 - 02:37pm - mtd
Apr 18, 2016 ~ 02:37pm ~ mtdavalle

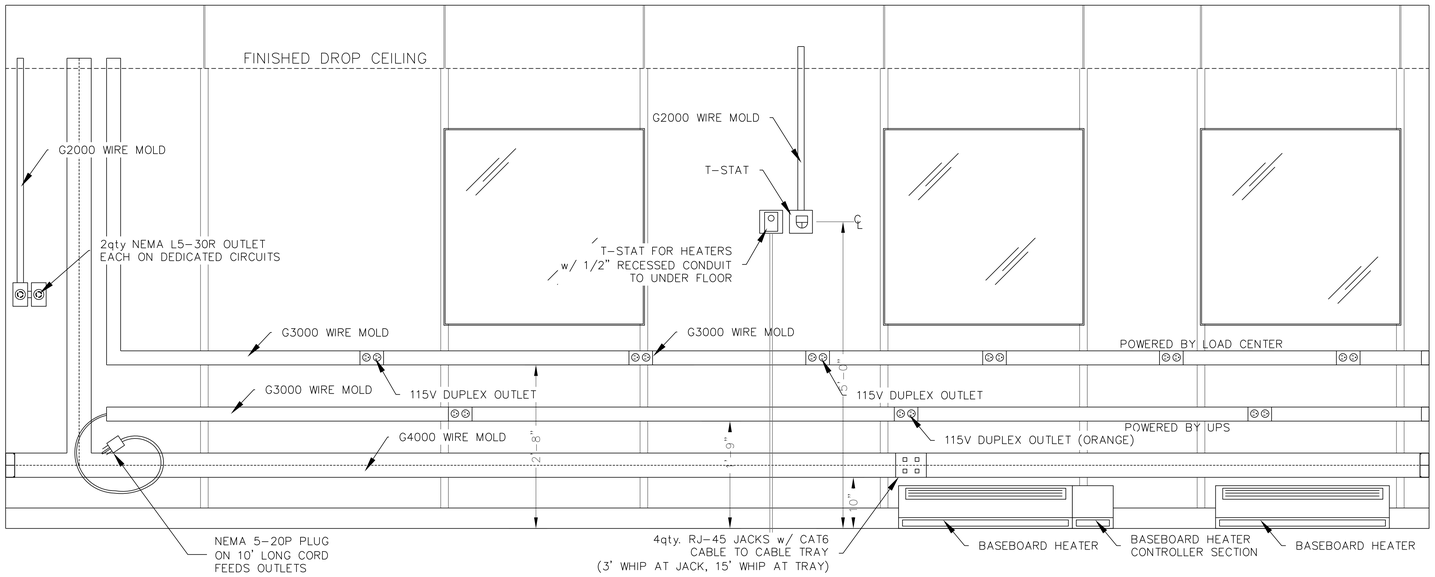

H/8 INTERIOR ELEVATION

1" = 1'-0" SCALE 0' 6" 1' 2' 3' FEET

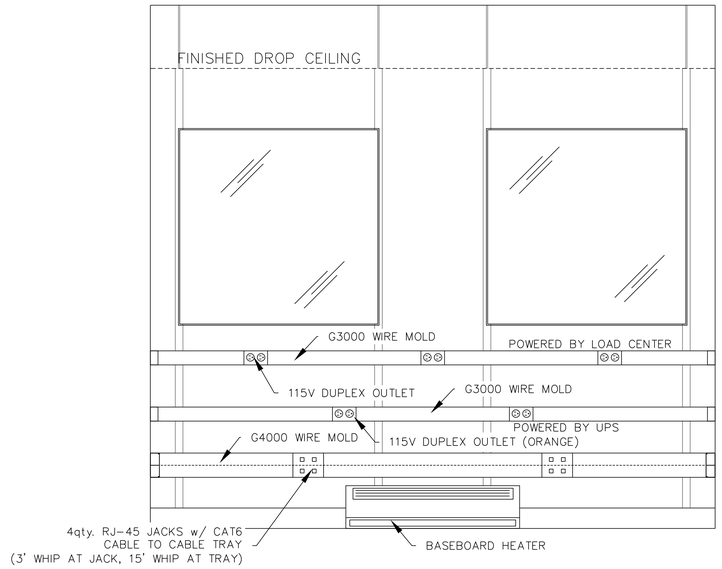

J/8 INTERIOR ELEVATION

1" = 1'-0" SCALE 0' 6" 1' 2' 3' FEET

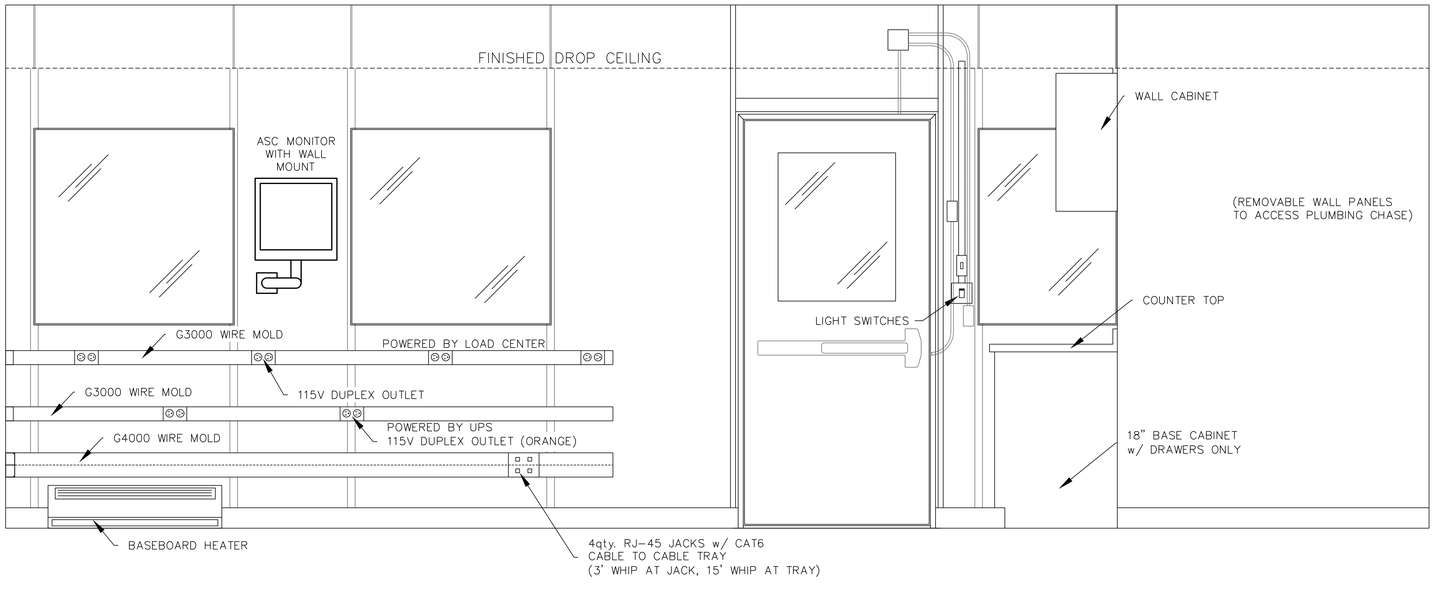

K/8 INTERIOR ELEVATION

1" = 1'-0" SCALE 0' 6" 1' 2' 3' FEET

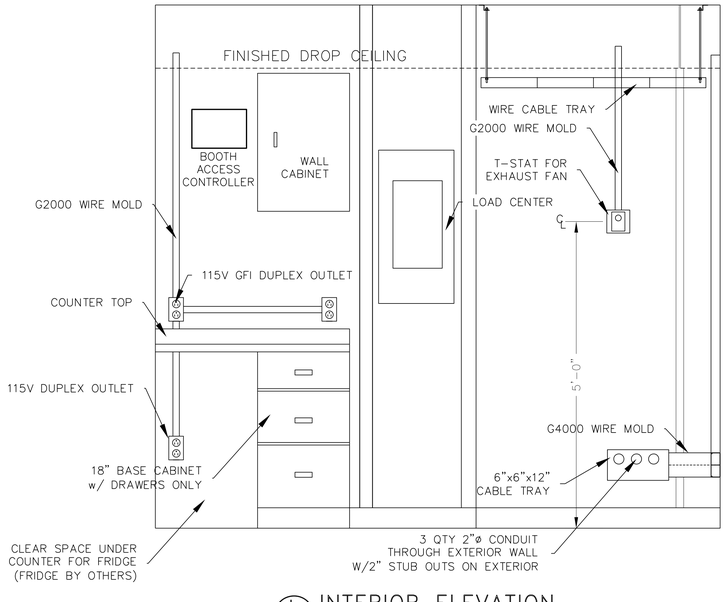

L/8 INTERIOR ELEVATION

1" = 1'-0" SCALE 0' 6" 1' 2' 3' FEET

DETAILS ON THIS SHEET PROVIDED FOR REFERENCE ONLY. BOOTH COMPONENTS SHOWN TO BE PROVIDED BY BOOTH MANUFACTURER.

PAUL M. GIEVER — STATE OF WASHINGTON — 28084 — STRUCTURAL ENGINEER — PROFESSIONAL ENGINEER

4/18/16

UNCLASSIFIED

Meier ARCHITECTURE • ENGINEERING
www.meierinc.com

Job No: 7833

8697 Gage Boulevard
Kennewick, WA 99336
P: 509.735.1589
F: 509.783.5075

PORT OF TACOMA – PCT STRADDLE CARRIER PORTAL BOOTH INTERIOR ELEVATIONS

ISSUE DATE	CROSSING CODE	SCALE
4/18/16	17031	SHOWN

SIZE	DWG NO	DWG CODE	SHEET NO	SHEETS	REV
F	WS8933		10	25	1

\PROJECTS\7800\7833 Tacoma Straddle Carrier\DWG\WS8933_10_1.dwg - Apr 18,2016 - 02:37pm - mtd
Apr 18, 2016 ~ 02:37pm ~ mtdavolle

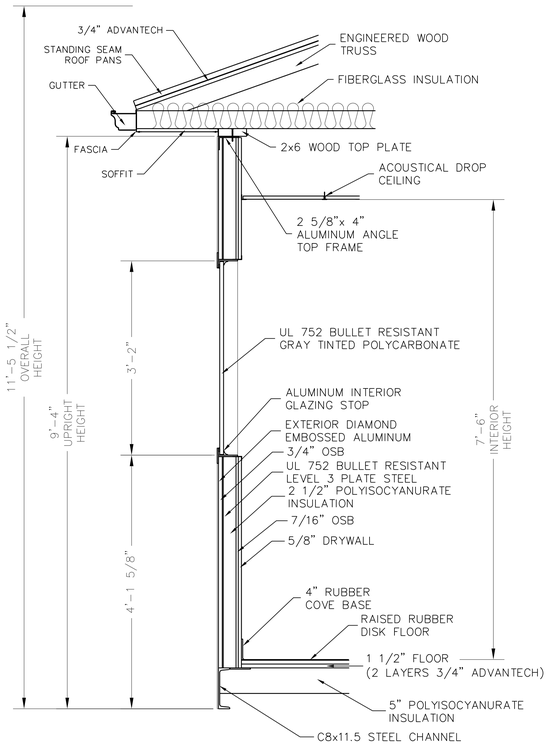

M 8 WALL SECTION DETAIL

1" = 1'-0" 0' 6" 1' 2' 3' SCALE FEET

NOTE:
1.) THIS DETAIL IS FOR REFERENCE ONLY.

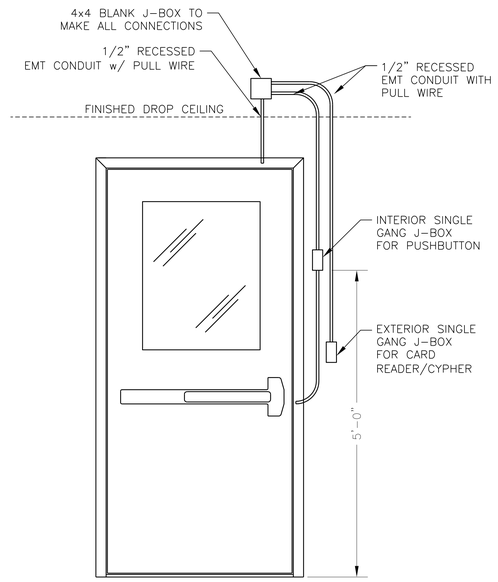

N 8 DOOR CONDUIT LAYOUT

1" = 1'-0" 0' 6" 1' 2' 3' SCALE FEET

UNCLASSIFIED

Meier ARCHITECTURE • ENGINEERING
Job No: 7833
www.meierinc.com
8697 Gage Boulevard
Kennewick, WA 99336
P: 509.735.1589
F: 509.783.5075

PORT OF TACOMA – PCT
STRADDLE CARRIER PORTAL
BOOTH SECTIONS AND DETAILS

ISSUE DATE	CROSSING CODE	SCALE
4/18/16	17031	SHOWN

SIZE	DWG NO	DWG CODE	SHEET NO	SHEETS	REV
F	WS8933		11	25	1

\PROJECTS\7800\7833 Tacoma Straddle Carrier\DWG\WS8933_11_1.dwg - Apr 18,2016 - 02:37pm - mtd

Apr 18, 2016 ~ 02:37pm ~ mtdavalle

CONDUIT SITE PLAN

1" = 100' 0' 50' 100' 200' 300'
SCALE FEET

UNCLASSIFIED

Meier ARCHITECTURE • ENGINEERING
Job No: 7833
www.meierinc.com
8697 Gage Boulevard
Kennewick, WA 99336
P: 509.735.1589
F: 509.783.5075

PORT OF TACOMA – PCT STRADDLE CARRIER PORTAL CONDUIT SITE PLAN

ISSUE DATE	CROSSING CODE	SCALE
4/18/16	17031	SHOWN

SIZE	DWG NO	DWG CODE	SHEET NO	SHEETS	REV
F	WS8933		12	25	1

PAMELA A. ARNESON
STATE OF WASHINGTON
38421
REGISTERED PROFESSIONAL ENGINEER
4/18/16

\PROJECTS\7800\7833 Tacoma Straddle Carrier\DWG\WS8933_12_1.dwg - Apr 18,2016 - 02:37pm - mtd

Apr 18, 2016 ~ 02:37pm ~ mtdavolle

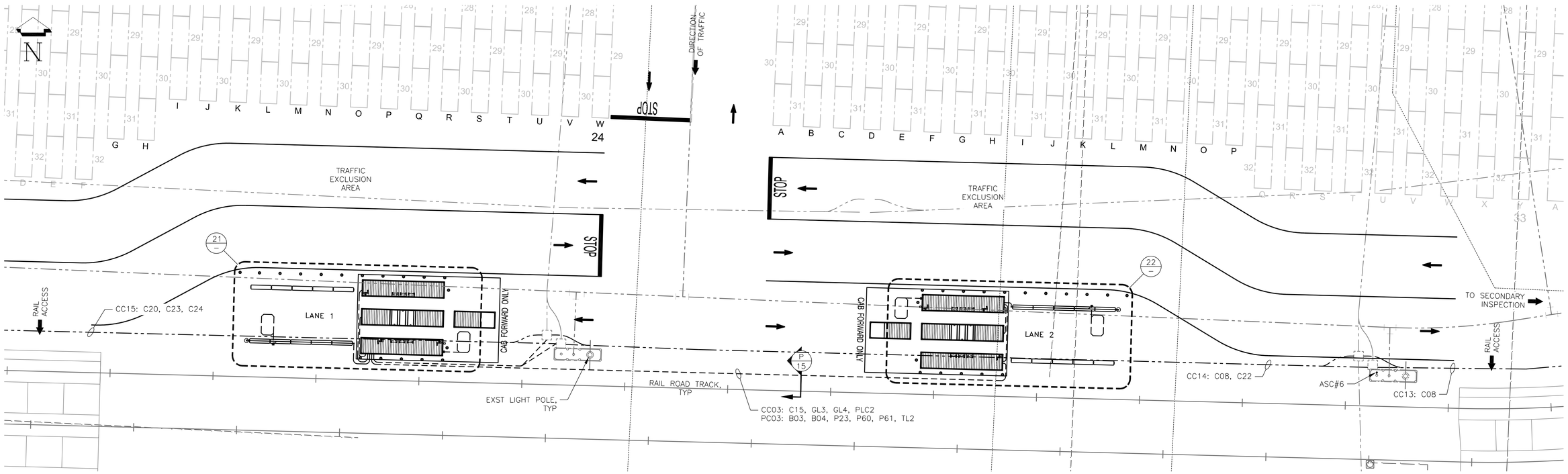

14/12 ENLARGED CONDUIT PLAN

1" = 20' SCALE 0' 10' 20' 40' 60' FEET

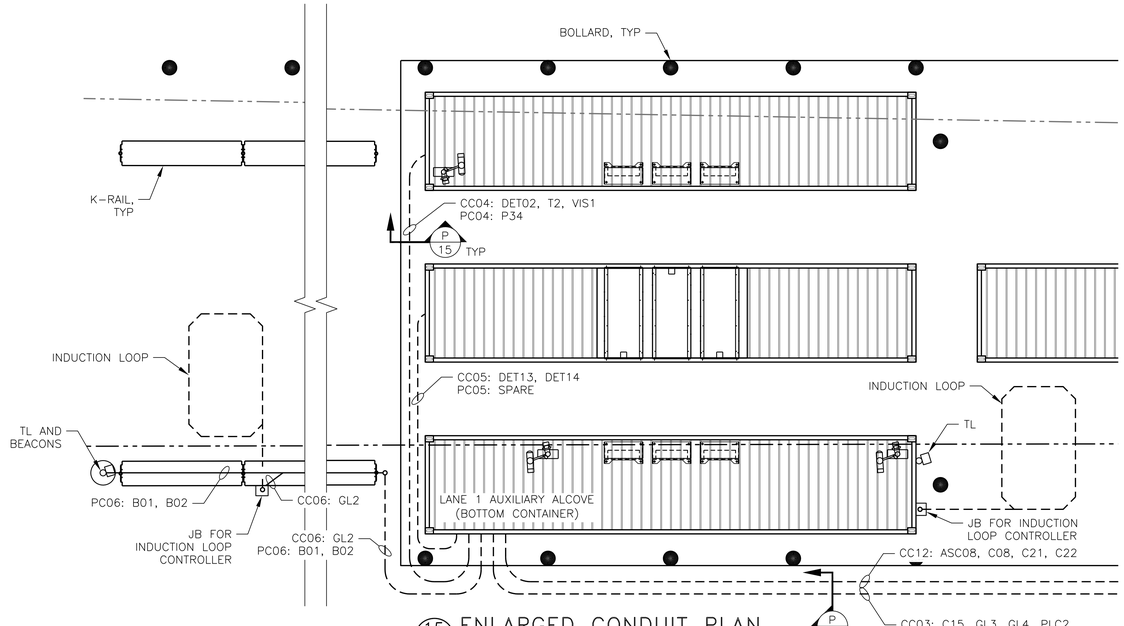

15/– ENLARGED CONDUIT PLAN

1" = 5' SCALE 0' 5' 10' 15' FEET

NOTE:
1.) CONDUIT ROUTING SHOWN IS DIAGRAMMATIC, FIELD ROUTE UNDER NEW SLAB WHERE POSSIBLE.

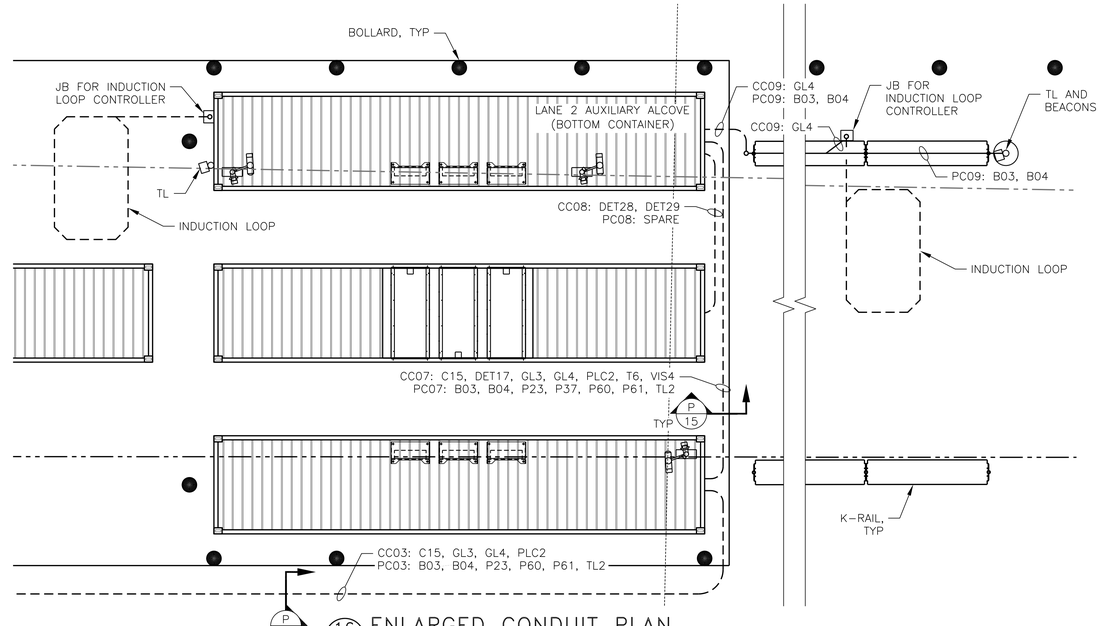

16/– ENLARGED CONDUIT PLAN

1" = 5' SCALE 0' 5' 10' 15' FEET

NOTE:
1.) CONDUIT ROUTING SHOWN IS DIAGRAMMATIC, FIELD ROUTE UNDER NEW SLAB WHERE POSSIBLE.

PAMELA A. ARNASON, STATE OF WASHINGTON, REGISTERED PROFESSIONAL ENGINEER 38421
4/18/16

UNCLASSIFIED

Meier ARCHITECTURE • ENGINEERING
www.meierinc.com
Job No: 7833
8697 Gage Boulevard
Kennewick, WA 99336
P: 509.735.1589
F: 509.783.5075

PORT OF TACOMA – PCT STRADDLE CARRIER PORTAL ENLARGED CONDUIT PLAN

ISSUE DATE	CROSSING CODE	SCALE
4/18/16	17031	SHOWN

SIZE	DWG NO	DWG CODE	SHEET NO	SHEETS	REV
F	WS8933		13	25	1

Apr 18, 2016 ~ 02:37pm ~ mldavalle

I:\PROJECTS\78001\7833 Tacoma Straddle Carrier\DWG\WS8933_13_1.dwg - Apr 18,2016 - 02:37pm - mld

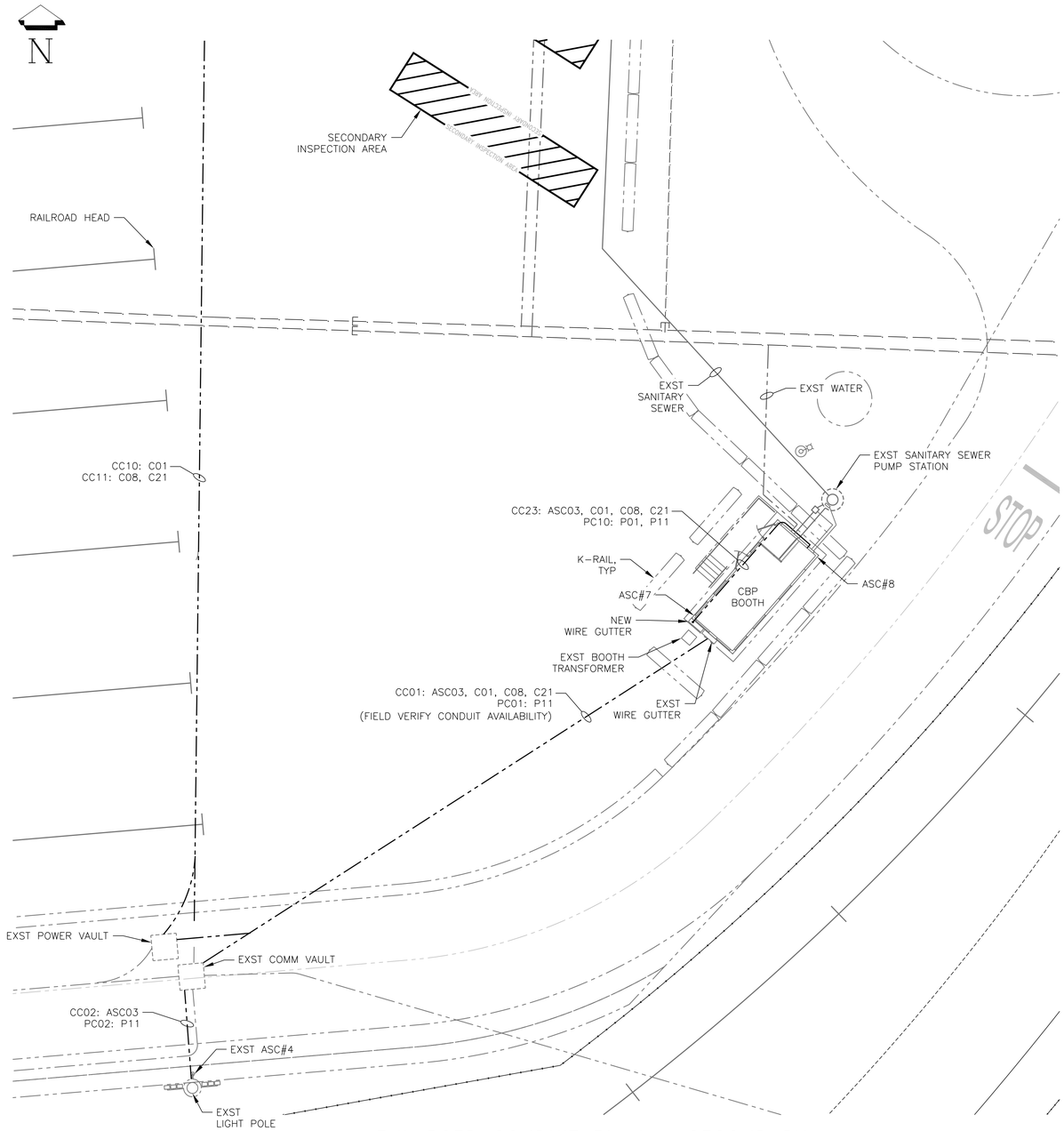

17/12 ENLARGED CONDUIT PLAN – SECONDARY

1" = 10' 0' 5' 10' 20' 30' SCALE FEET

4/18/16

UNCLASSIFIED

Meier ARCHITECTURE • ENGINEERING
Job No: 7833
www.meierinc.com
8697 Gage Boulevard
Kennewick, WA 99336
P: 509.735.1589
F: 509.783.5075

PORT OF TACOMA – PCT
STRADDLE CARRIER PORTAL
ENLARGED CONDUIT PLAN

ISSUE DATE	CROSSING CODE	SCALE
4/18/16	17031	SHOWN

SIZE	DWG NO	DWG CODE	SHEET NO	SHEETS	REV
F	WS8933		14	25	1

\PROJECTS\7800\7833 Tacoma Straddle Carrier\DWG\WS8933_14_1.dwg - Apr 18,2016 - 02:37pm - mtd

Apr 18, 2016 ~ 02:37pm ~ mtdavolle

BOOTH — EXISTING (SUPPLIED WITH MODULAR BOOTH)

PANEL A

VOLTAGE : 120/240V, 1-PHASE, 3-WIRE
AMPERES : 200 MAIN BRKR : 150 AIC : 22,000
LUGS : Bottom MOUNTING : SURFACE
HEIGHT : WIDTH : DEPTH :
FEEDERS/CONDUIT: (SEE ONE-LINE DIAGRAM)
TYPE :

CIRCUIT DESCRIPTION	P	BKR	CKT	ØA	ØB	CKT	BKR	P	CIRCUIT DESCRIPTION
HVAC	2	30	1			2	–	2	TRANSIENT VOLTAGE SURGE SUPPRESSION
HVAC	–	–	3			4	–	–	TRANSIENT VOLTAGE SURGE SUPPRESSION
BASEBOARD HEATERS	2	20	5			6	20	2	BASEBOARD HEATERS
BASEBOARD HEATERS	–	–	7			8	–	–	BASEBOARD HEATERS
115V DEDICATED OUTLET	1	30	9			10	30	1	WATER HEATER
115V DEDICATED OUTLET	1	30	11			12	20	1	EXTERIOR GFI OUTLETS
115V OUTLET (FRIDGE)	1	20	13			14	20	1	OUTLETS IN G4000
115V GFI OUTLET (KITCHEN)	1	20	15			16	20	1	OUTLETS IN G4000
INTERIOR LIGHTS	1	20	17			18	20	1	OUTLETS IN G4000
BATHROOM LIGHT/FAN	1	20	19			20	20	1	115V GFI BATHROOM
SMOKE DETECTOR	1	20	21			22	20	1	EXTERIOR LIGHTS
			23			24	20	1	EXHAUST FAN
			25	1800		26	25	2	SEWAGE PUMP
			27		1800	28	–	–	
			29	180		30	20	1	HEAT TRACE – GFCI
			31			32			
			33			34			
			35			36			
			37			38			
			39			40			
			41			42			

TOTAL VOLT-AMPS – –
TOTAL CONNECTED LOAD: – KVA – AMPS
TOTAL DEMAND LOAD: KVA AMPS
REMARKS:

RPM LANE 1 AUXILIARY CABINET — EXISTING

PANEL B

VOLTAGE : 120/240V, 1-PHASE, 3-WIRE
AMPERES : 200 MAIN BRKR : 200 AIC : 22,000
LUGS : MOUNTING : SURFACE
HEIGHT : WIDTH : DEPTH :
FEEDERS/CONDUIT:
TYPE :

CIRCUIT DESCRIPTION	P	BKR	CKT	ØA	ØB	CKT	BKR	P	CIRCUIT DESCRIPTION
TRANSIENT VOLTAGE SURGE SUPPRESSION			1	1150		2	20	1	UPS
TRANSIENT VOLTAGE SURGE SUPPRESSION			3		1150	4	20	1	UPS
PLC – VIS LIGHTS	1	20	5	200 420		6	20	1	BATTERY BOX 1
PLC – HEATER	1	20	7		400 420	8	20	1	BATTERY BOX 2
			9	400		10	20	1	CCB HEATER – LANE 1
			11		400	12	20	1	CCB HEATER – LANE 2
			13			14			
			15			16			
			17			18			
			19			20			
			21			22			
			23			24			
			25			26			
			27			28			
			29			30			
			31			32			
			33			34			
			35			36			
			37			38			
			39			40			
			41			42			

TOTAL VOLT-AMPS 2170 2370
TOTAL CONNECTED LOAD: 4540 KVA 18.9 AMPS
TOTAL DEMAND LOAD: KVA AMPS
REMARKS:

NOTE:
PROVIDE PANEL WITH TRANSIENT VOLTAGE SURGE SUPPRESSION (120 kA, 120/240V, 1ø, 3W).

LOCATED ON POLE WITH ASC#1 — EXISTING

MINI POWER-ZONE PANEL RYC1

VOLTAGE : 480V-120/240V, 1-PHASE, 3-WIRE
AMPERES : MAIN BRKR : 20 AIC :
LUGS : MOUNTING : SURFACE
HEIGHT : WIDTH : DEPTH :
FEEDERS/CONDUIT:
TYPE :

CIRCUIT DESCRIPTION	P	BKR	CKT	ØA	ØB	CKT	BKR	P	CIRCUIT DESCRIPTION
GFI RECEPTACLE	1	20	1			2	30	2	SECONDARY MAIN
–	1	20	3			4	–	–	
ASC POWER SUPPLY	**1**	**20**	5	200		6	20	1	RED AND BLUE LIGHT WIRING
SPARE	1	20	7			8	20	1	SPARE
			9			10			
			11			12			
			13			14			
			15			16			
			17			18			
			19			20			
			21			22			
			23			24			
			25			26			
			27			28			
			29			30			
			31			32			
			33			34			
			35			36			
			37			38			
			39			40			
			41			42			

TOTAL VOLT-AMPS – –
TOTAL CONNECTED LOAD: – KVA – AMPS
TOTAL DEMAND LOAD: KVA AMPS
REMARKS:

LOCATED ON POLE WITH ASC#2 AND ASC#5 — EXISTING

MINI POWER-ZONE PANEL RYC2

VOLTAGE : 480V-120/240V, 1-PHASE, 3-WIRE
AMPERES : MAIN BRKR : 20 AIC :
LUGS : MOUNTING : SURFACE
HEIGHT : WIDTH : DEPTH :
FEEDERS/CONDUIT:
TYPE :

CIRCUIT DESCRIPTION	P	BKR	CKT	ØA	ØB	CKT	BKR	P	CIRCUIT DESCRIPTION
GFI RECEPTACLE	1	20	1			2	30	2	SECONDARY MAIN
SPARE	1	20	3			4	–	–	
ASC POWER SUPPLY	**1**	**20**	5	200		6	20	1	RED AND BLUE LIGHT WIRING
SPARE	1	20	7			8	20	1	SPARE
			9			10			
			11			12			
			13			14			
			15			16			
			17			18			
			19			20			
			21			22			
			23			24			
			25			26			
			27			28			
			29			30			
			31			32			
			33			34			
			35			36			
			37			38			
			39			40			
			41			42			

TOTAL VOLT-AMPS – –
TOTAL CONNECTED LOAD: – KVA – AMPS
TOTAL DEMAND LOAD: KVA AMPS
REMARKS:

LOCATED ON POLE WITH ASC#3 — EXISTING

MINI POWER-ZONE PANEL RYC4

VOLTAGE : 480V-120/240V, 1-PHASE, 3-WIRE
AMPERES : MAIN BRKR : 20 AIC :
LUGS : MOUNTING : SURFACE
HEIGHT : WIDTH : DEPTH :
FEEDERS/CONDUIT:
TYPE :

CIRCUIT DESCRIPTION	P	BKR	CKT	ØA	ØB	CKT	BKR	P	CIRCUIT DESCRIPTION
GFI RECEPTACLE	1	20	1			2	30	2	SECONDARY MAIN
SPARE	1	20	3			4	–	–	
ASC POWER SUPPLY	**1**	**20**	5	200		6	20	1	RED AND BLUE LIGHT WIRING
SPARE	1	20	7			8	20	1	SPARE
			9			10			
			11			12			
			13			14			
			15			16			
			17			18			
			19			20			
			21			22			
			23			24			
			25			26			
			27			28			
			29			30			
			31			32			
			33			34			
			35			36			
			37			38			
			39			40			
			41			42			

TOTAL VOLT-AMPS – –
TOTAL CONNECTED LOAD: – KVA – AMPS
TOTAL DEMAND LOAD: KVA AMPS
REMARKS:

LOCATED ON POLE WITH ASC#6 — EXISTING

MINI POWER-ZONE PANEL RYC5

VOLTAGE : 480V-120/240V, 1-PHASE, 3-WIRE
AMPERES : MAIN BRKR : 20 AIC :
LUGS : MOUNTING : SURFACE
HEIGHT : WIDTH : DEPTH :
FEEDERS/CONDUIT:
TYPE :

CIRCUIT DESCRIPTION	P	BKR	CKT	ØA	ØB	CKT	BKR	P	CIRCUIT DESCRIPTION
GFI RECEPTACLE	1	20	1			2	30	2	SECONDARY MAIN
SPARE	1	20	3			4	–	–	
ASC POWER SUPPLY	**1**	**20**	5	200		6	20	1	RED AND BLUE LIGHT WIRING
SPARE	1	20	7			8	20	1	SPARE
			9			10			
			11			12			
			13			14			
			15			16			
			17			18			
			19			20			
			21			22			
			23			24			
			25			26			
			27			28			
			29			30			
			31			32			
			33			34			
			35			36			
			37			38			
			39			40			
			41			42			

TOTAL VOLT-AMPS – –
TOTAL CONNECTED LOAD: – KVA – AMPS
TOTAL DEMAND LOAD: KVA AMPS
REMARKS:

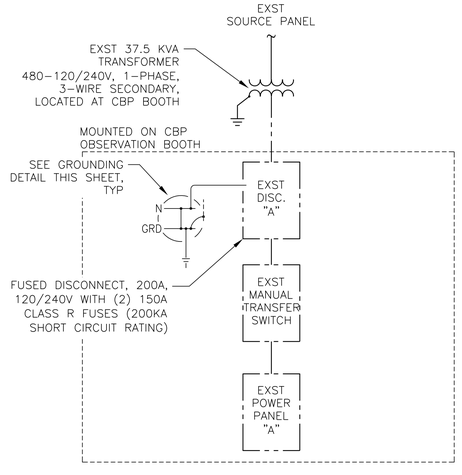

CONNECTION DIAGRAM NOT TO SCALE

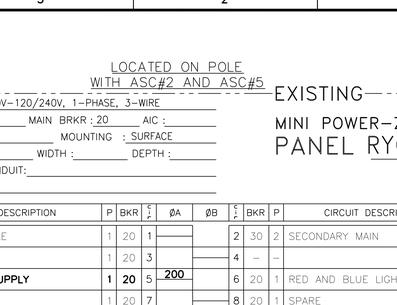

P 13 TRENCH DETAIL

1" = 1'-0" 0' 6" 1' 2' 3' SCALE FEET

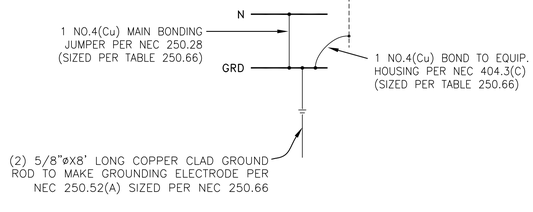

GROUNDING DETAIL NOT TO SCALE

4/18/16

UNCLASSIFIED

Meier ARCHITECTURE • ENGINEERING www.meierinc.com
Job No: 7833
8697 Gage Boulevard
Kennewick, WA 99336
P: 509.735.1589
F: 509.783.5075

PORT OF TACOMA – PCT STRADDLE CARRIER PORTAL PANEL SCHED & CONDUIT DETAILS

ISSUE DATE	CROSSING CODE	SCALE
4/18/16	17031	SHOWN

SIZE	DWG NO	DWG CODE	SHEET NO	SHEETS	REV
F	WS8933		15	25	1

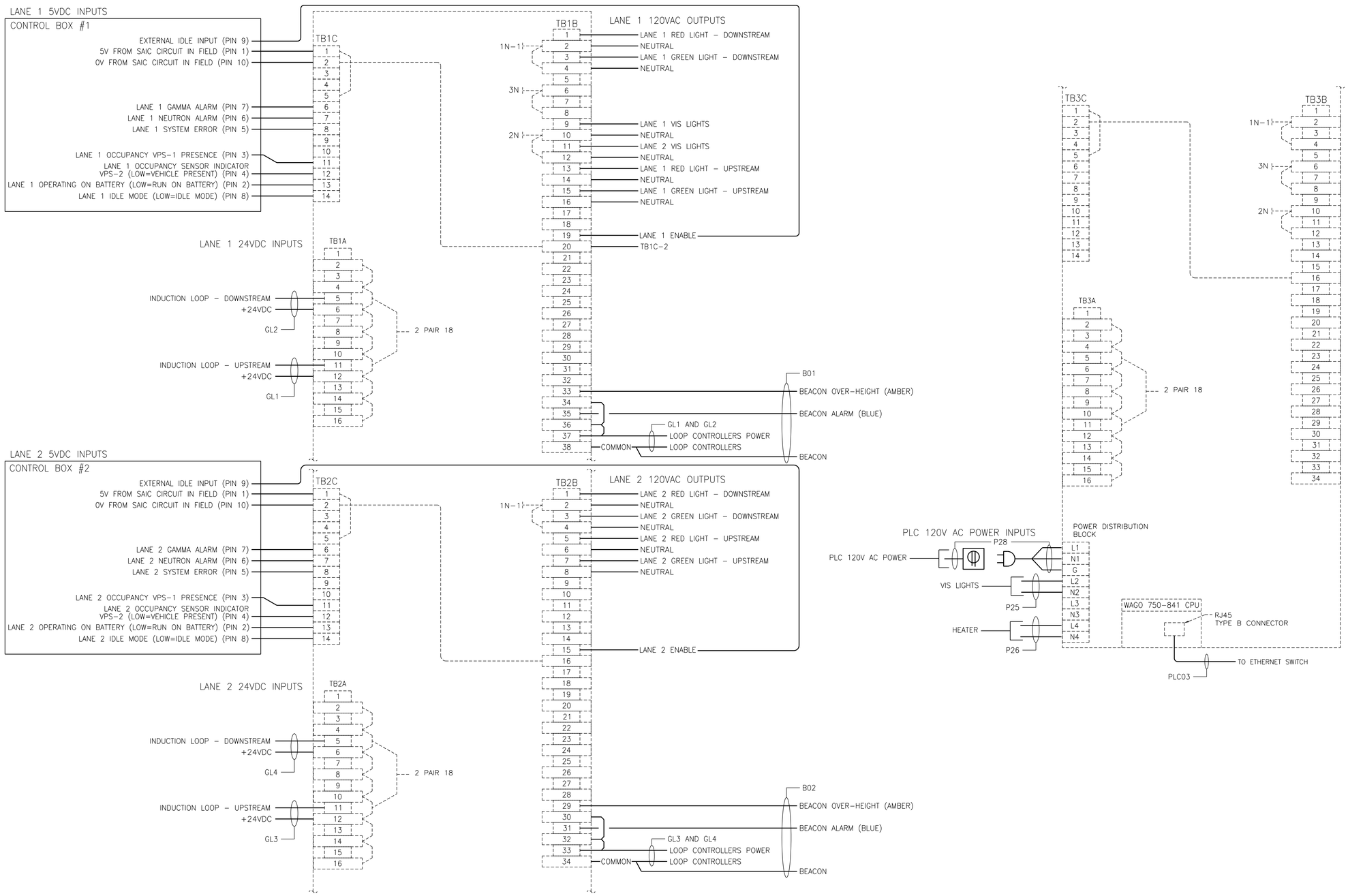

PLC DIAGRAM

NOT TO SCALE

NOTES:
1.) CONTRACTOR SHALL TERMINATE ALL WIRES AND CAPTURE WIRE COLORS ON REDLINE DRAWING(S).

FOR OFFICIAL USE ONLY

Meier ARCHITECTURE • ENGINEERING
Job No: 7833
www.meierinc.com
8697 Gage Boulevard
Kennewick, WA 99336
P: 509.735.1589
F: 509.783.5075

REQUIREMENTS FOR HANDLING FOUO MATERIAL

1. ONLY SHOW THIS DRAWING TO THOSE INDIVIDUALS WHO HAVE A NEED TO KNOW IN ORDER TO GET THE JOB DONE.
2. WHEN NOT USING THIS DOCUMENT, KEEP IT UNDER LOCK AND KEY, SUCH AS A LOCKED FILE CABINET, LOCKED OFFICE, LOCKED BRIEFCASE, OR OUT OF SIGHT IN A LOCKED VEHICLE.
3. DO NOT MAKE A COPY OF THIS DRAWING WITHOUT PERMISSION FROM ANGELA THOMPSON PHONE: 509-375-2652, EMAIL: angela.thompson@pnl.gov
4. WHEN THE DOCUMENT IS NO LONGER NEEDED RETURN IT TO MAX PHELPS, PNNL, PO BOX 999, K6-66, RICHLAND, WA 99352.

PORT OF TACOMA – PCT STRADDLE CARRIER PORTAL PLC WIRING DIAGRAM

ISSUE DATE	CROSSING CODE	SCALE
4/18/16	17031	NONE

SIZE	DWG NO	DWG CODE	SHEET NO	SHEETS	REV
F	WS8933		16	25	1

\PROJECTS\7800\7833 Tacoma Straddle Carrier\DWG\WS8933_16_1.dwg - Apr 18,2016 - 02:37pm - mtd
Apr 18, 2016 - 02:37pm - mtdovalle

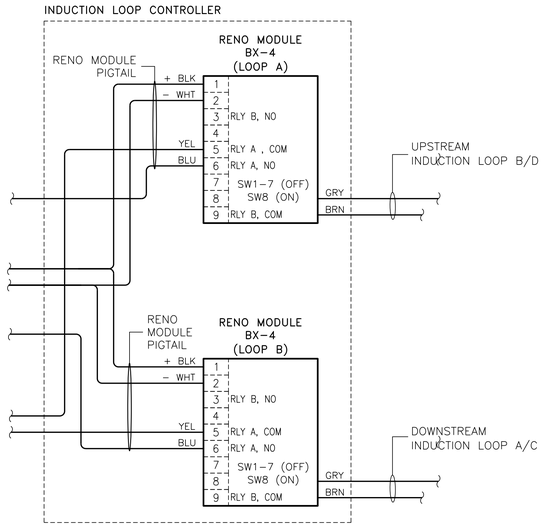

INDUCTION LOOP WIRING DIAGRAM

NOT TO SCALE

NOTE:
1.) DEFAULT GATE ARM CONDITION IS SET TO NORMALLY CLOSED.

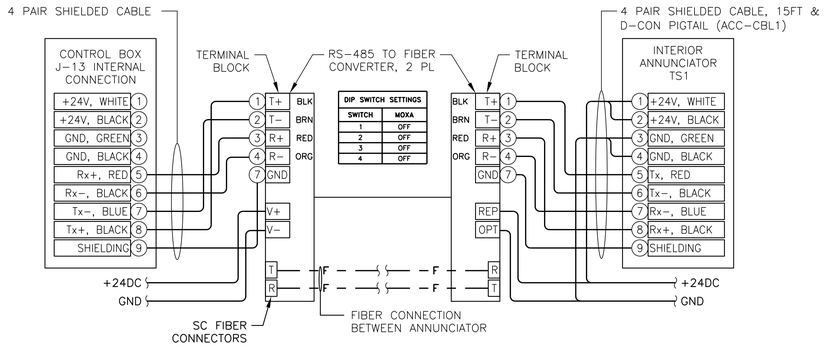

DIP SWITCH SETTINGS	
SWITCH	MOXA
1	OFF
2	OFF
3	OFF
4	OFF

ANNUNCIATOR (MOXA) WIRING DIAGRAM

NOT TO SCALE

NOTE:
1.) COLOR OF WIRES MAY BE DIFFERENT. VERIFY PINOUTS.

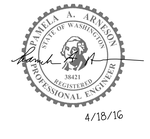

4/18/16

UNCLASSIFIED

Meier ARCHITECTURE • ENGINEERING
Job No: 7833
www.meierinc.com
8697 Gage Boulevard
Kennewick, WA 99336
P: 509.735.1589
F: 509.783.5075

PORT OF TACOMA – PCT
STRADDLE CARRIER PORTAL
MISC WIRING DIAGRAMS

ISSUE DATE	CROSSING CODE	SCALE
4/18/16	17031	NONE

SIZE	DWG NO	DWG CODE	SHEET NO	SHEETS	REV
F	WS8933		17	25	1

\PROJECTS\78001\7833 Tacoma Straddle Carrier\DWG\WS8933_17_1.dwg - Apr 18,2016 - 02:37pm - mtd
Apr 18, 2016 ~ 02:37pm ~ mtdavalle

NOTE:
1.) ALL ITEMS IN EQUIPMENT CABINET WITH SUPPLIED POWER CORD(S) ARE TO BE PLUGGED INTO POWER STRIP.
2.) FOR OUTDOOR SPD INSTALL IN NEAREST COMMUNICATION JB AND GROUND PER MANUFACTURER'S INSTRUCTIONS.

WIRING LEGEND

- POWER
- COMMUNICATION
- EXST

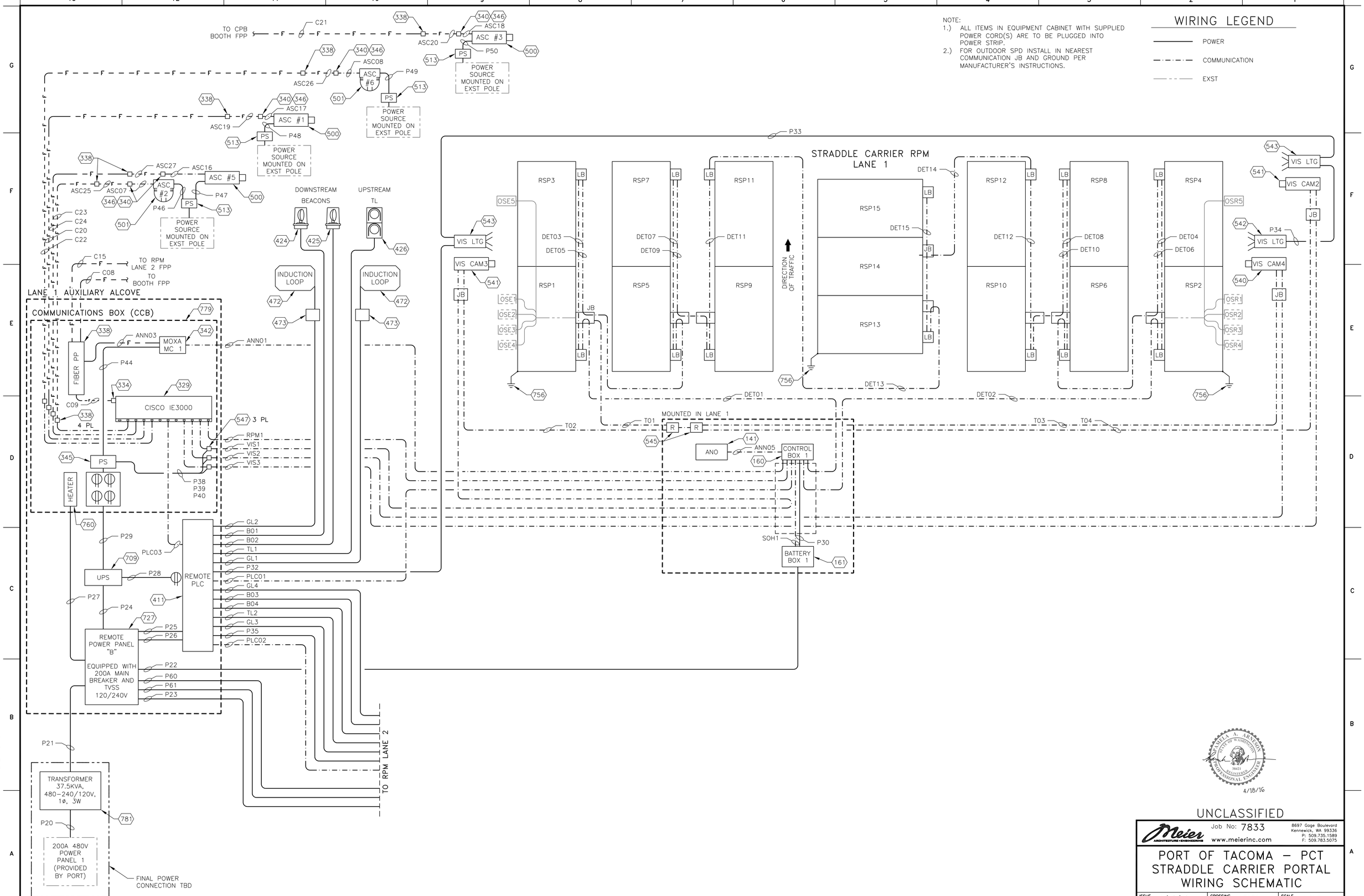

4/18/16

UNCLASSIFIED

Meier ARCHITECTURE • ENGINEERING
Job No: 7833
www.meierinc.com
8697 Gage Boulevard
Kennewick, WA 99336
P: 509.735.1589
F: 509.783.5075

PORT OF TACOMA – PCT STRADDLE CARRIER PORTAL WIRING SCHEMATIC

ISSUE DATE	CROSSING CODE	SCALE
4/18/16	17031	NONE

SIZE	DWG NO	DWG CODE	SHEET NO	SHEETS	REV
F	WS8933		18	25	1

Apr 18, 2016 ~ 02:37pm ~ mtdavalle

\PROJECTS\7800\7833 Tacoma Straddle Carrier\DWG\WS8933_18_1.dwg - Apr 18,2016 - 02:37pm - mtd

NOTE:
1.) ALL ITEMS IN EQUIPMENT CABINET WITH SUPPLIED POWER CORD(S) ARE TO BE PLUGGED INTO POWER STRIP.
2.) FOR OUTDOOR SPD INSTALL IN NEAREST COMMUNICATION JB AND GROUND PER MANUFACTURER'S INSTRUCTIONS.

WIRING LEGEND

- POWER
- COMMUNICATION
- EXST

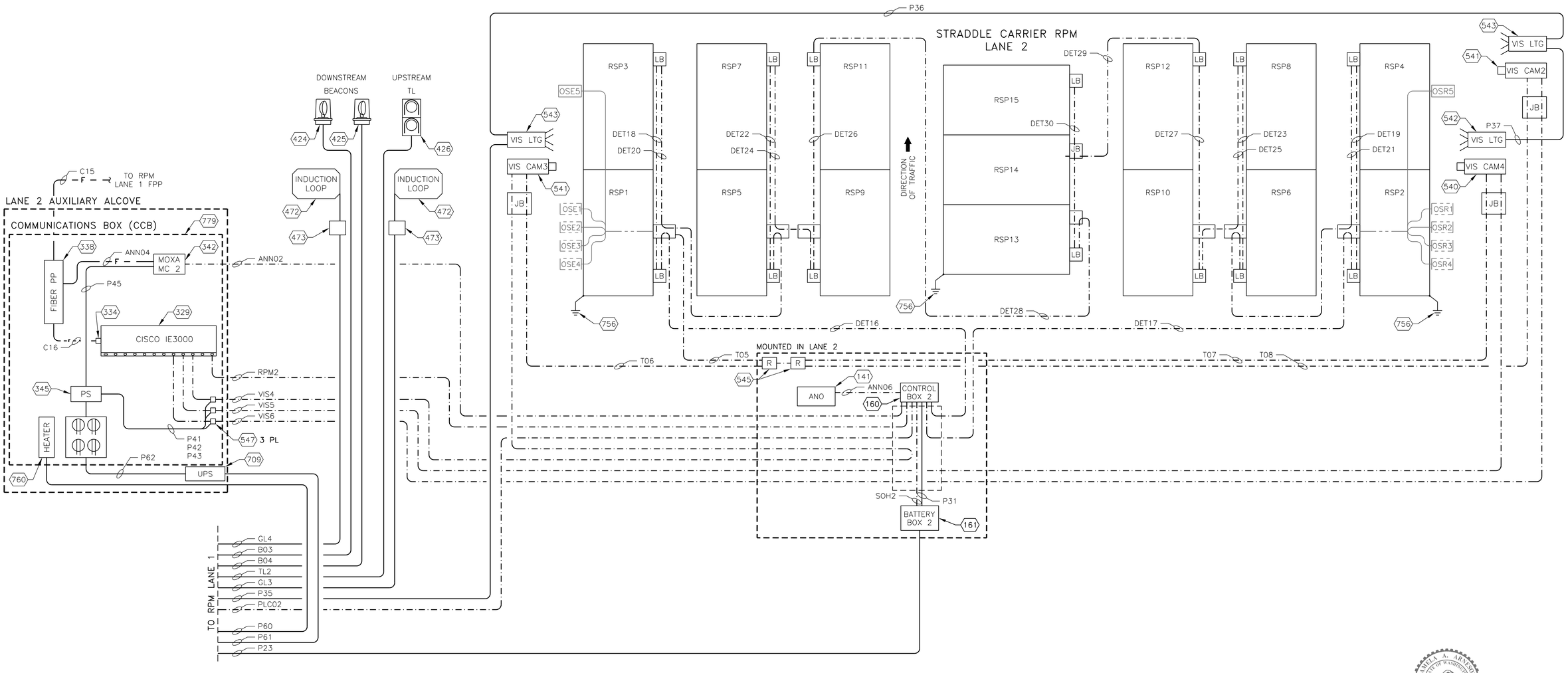

4/18/16

FOR OFFICIAL USE ONLY

Meier ARCHITECTURE • ENGINEERING
Job No: 7833
www.meierinc.com
8697 Gage Boulevard
Kennewick, WA 99336
P: 509.735.1589
F: 509.783.5075

PORT OF TACOMA – PCT STRADDLE CARRIER PORTAL WIRING SCHEMATIC

ISSUE DATE	CROSSING CODE	SCALE
4/18/16	17031	NONE

SIZE	DWG NO	DWG CODE	SHEET NO	SHEETS	REV
F	WS8933		19	25	1

REQUIREMENTS FOR HANDLING FOUO MATERIAL

1. ONLY SHOW THIS DRAWING TO THOSE INDIVIDUALS WHO HAVE A NEED TO KNOW IN ORDER TO GET THE JOB DONE.
2. WHEN NOT USING THIS DOCUMENT, KEEP IT UNDER LOCK AND KEY, SUCH AS A LOCKED FILE CABINET, LOCKED OFFICE, LOCKED BRIEFCASE, OR OUT OF SIGHT IN A LOCKED VEHICLE.
3. DO NOT MAKE A COPY OF THIS DRAWING WITHOUT PERMISSION FROM ANGELA THOMPSON PHONE: 509-375-2652 EMAIL: angela.thompson@pnl.gov
4. WHEN THE DOCUMENT IS NO LONGER NEEDED RETURN IT TO MAX PHELPS, PNNL, PO BOX 999, K6-66, RICHLAND, WA 99352.

\PROJECTS\78001\7833 Tacoma Straddle Carrier\DWG\WS8933_19_1.dwg - Apr 18,2016 - 02:37pm - mtd
Apr 18, 2016 ~ 02:37pm ~ mtdavalle

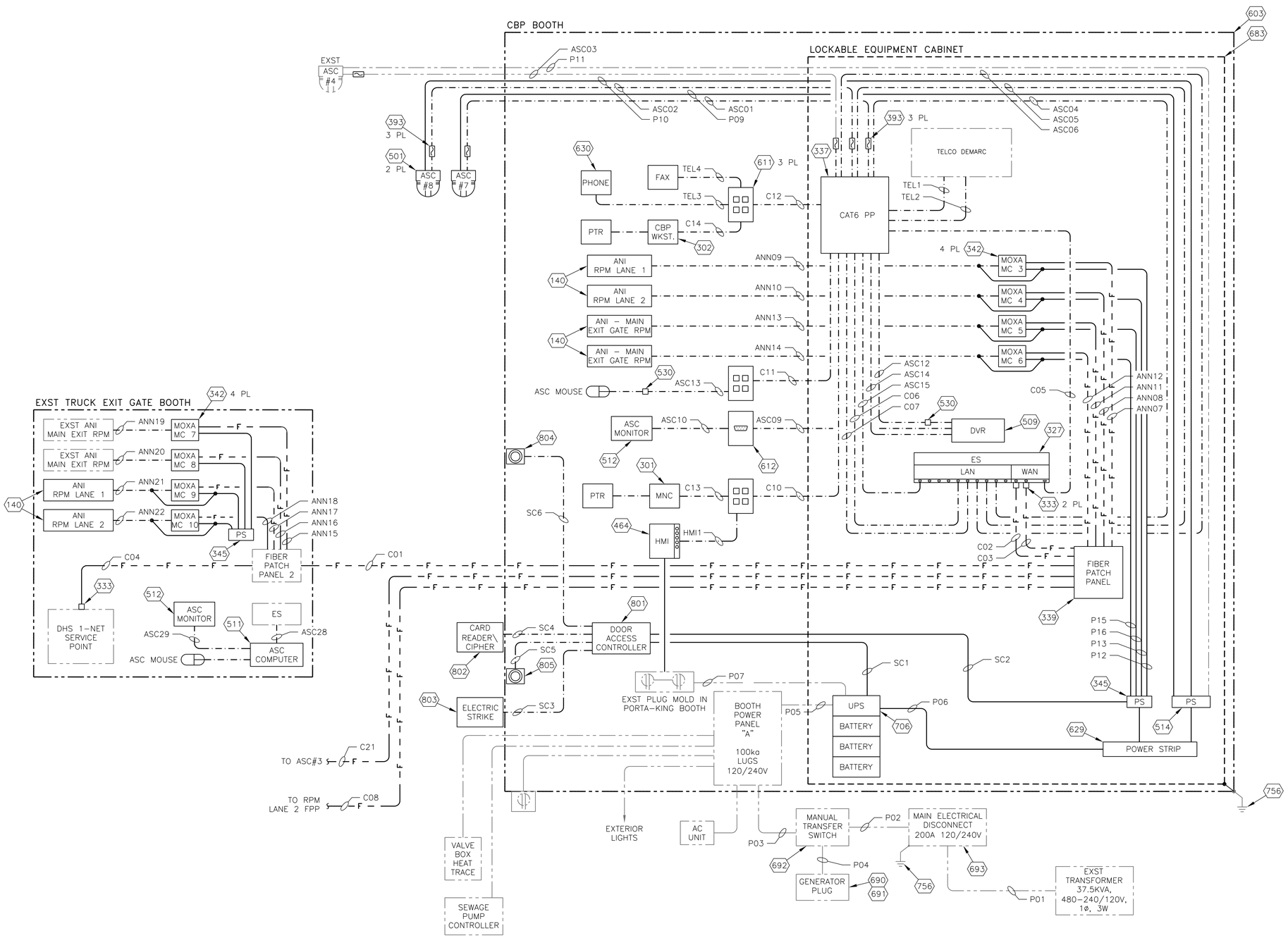

WIRING LEGEND

POWER

COMMUNICATION

EXST

NOTES:

1.) GROUND SURGE PROTECTION DEVICES TO NEAREST EARTH GROUND VIA #6 AWG WIRE.
2.) CAT 6 CABLE BETWEEN SPDS, SHIELD OR DRAIN WIRE SHALL BE GROUNDED TO SPD GROUND LUG.
3.) UNSHIELDED CAT 6 CABLE MAY BE USED BETWEEN SPD AND CONTROL BOX AND SPD AND ETHERNET SWITCH.
4.) CONTROL BOX AND BATTERY BOX TO BE GROUNDED TO NEAREST EARTH GROUND.
5.) ALL GROUND WIRES IN BATTERY BOX TO BE LANDED ON SAME LUG.
6.) CONTRACTOR TO LEAVE ADEQUATE SERVICE LOOP TO PROVIDE FREE MOVEMENT OF EQUIPMENT CABINET.
7.) ALL RPM EQUIPMENT WITH SUPPLIED POWER CORD(S) ARE TO BE PLUGGED INTO UPS POWER STRIP/PLUG MOLD.
8.) CBP TO PARTITION ETHERNET SWITCH FOR WAN AND LAN CONNECTIONS.

4/18/16

FOR OFFICIAL USE ONLY

Meier ARCHITECTURE • ENGINEERING
Job No: 7833
www.meierinc.com
8697 Gage Boulevard
Kennewick, WA 99336
P: 509.735.1589
F: 509.783.5075

PORT OF TACOMA – PCT STRADDLE CARRIER PORTAL WIRING SCHEMATIC

ISSUE DATE	CROSSING CODE	SCALE
4/18/16	17031	NONE

SIZE	DWG NO	DWG CODE	SHEET NO	SHEETS	REV
F	WS8933		20	25	1

REQUIREMENTS FOR HANDLING FOUO MATERIAL

1. ONLY SHOW THIS DRAWING TO THOSE INDIVIDUALS WHO HAVE A NEED TO KNOW IN ORDER TO GET THE JOB DONE.
2. WHEN NOT USING THIS DOCUMENT, KEEP IT UNDER LOCK AND KEY, SUCH AS A LOCKED FILE CABINET, LOCKED OFFICE, LOCKED BRIEFCASE, OR OUT OF SIGHT IN A LOCKED VEHICLE.
3. DO NOT MAKE A COPY OF THIS DRAWING WITHOUT PERMISSION FROM ANGELA THOMPSON PHONE: 509-375-2652 EMAIL: angela.thompson@pnl.gov
4. WHEN THE DOCUMENT IS NO LONGER NEEDED RETURN IT TO MAX PHELPS, PNNL, PO BOX 999, K6-66, RICHLAND, WA 99352.

\PROJECTS\7800\7833 Tacoma Straddle Carrier\DWG\WS8933_20_1.dwg - Apr 18,2016 - 02:38pm - mtd
Apr 18, 2016 ~ 02:38pm ~ mtdavalle

COMMUNICATIONS CABLE SCHEDULE

ID	FROM	TO	CABLE TYPE	CABLE LENGTH	REMARKS
ANN01	CONTROL BOX – LANE 1	MOXA 1 – CCB	ALPHA 35484	35'	NO SUBSTITUTIONS ALLOWED
ANN02	CONTROL BOX – LANE 2	MOXA 2 – CCB	ALPHA 35484	35'	NO SUBSTITUTIONS ALLOWED
ANN03	MOXA 1 – CCB	FIBER PATCH PANEL – CCB	SC–ST FIBER PATCH CABLE	3'	SM DUPLEX (2 REQUIRED)
ANN04	MOXA 2 – CCB	FIBER PATCH PANEL – CCB	SC–ST FIBER PATCH CABLE	3'	SM DUPLEX (2 REQUIRED)
ANN05	CONTROL BOX – LANE 1	ANO – LANE 1	ALPHA 35484	20'	NO SUBSTITUTIONS ALLOWED
ANN06	CONTROL BOX – LANE 2	ANO – LANE 2	ALPHA 35484	20'	NO SUBSTITUTIONS ALLOWED
ANN07	FIBER PATCH PANEL – BOOTH EQUIPMENT RACK	MOXA 3 – BOOTH EQUIPMENT RACK	SC–ST FIBER PATCH CABLE	6'	SM DUPLEX (2 REQUIRED)
ANN08	FIBER PATCH PANEL – BOOTH EQUIPMENT RACK	MOXA 4 – BOOTH EQUIPMENT RACK	SC–ST FIBER PATCH CABLE	6'	SM DUPLEX (2 REQUIRED)
ANN09	MOXA 3 – BOOTH EQUIPMENT RACK	ANI LANE 1 – BOOTH	ALPHA 35484	35'	NO SUBSTITUTIONS ALLOWED
ANN10	MOXA 4 – BOOTH EQUIPMENT RACK	ANI LANE 2 – BOOTH	ALPHA 35484	35'	NO SUBSTITUTIONS ALLOWED
ANN11	FIBER PATCH PANEL – BOOTH EQUIPMENT RACK	MOXA 5 – BOOTH EQUIPMENT RACK	SC–ST FIBER PATCH CABLE	6'	SM DUPLEX (2 REQUIRED)
ANN12	FIBER PATCH PANEL – BOOTH EQUIPMENT RACK	MOXA 6 – BOOTH EQUIPMENT RACK	SC–ST FIBER PATCH CABLE	6'	SM DUPLEX (2 REQUIRED)
ANN13	MOXA 5 – BOOTH EQUIPMENT RACK	EXIT GATE ANI – BOOTH	ALPHA 35484	35'	NO SUBSTITUTIONS ALLOWED
ANN14	MOXA 6 – BOOTH EQUIPMENT RACK	EXIT GATE ANI – BOOTH	ALPHA 35484	35'	NO SUBSTITUTIONS ALLOWED
ANN15	FIBER PATCH PANEL – EXIT GATE BOOTH	MOXA 7 – EXIT GATE BOOTH	SC–ST FIBER PATCH CABLE	6'	SM DUPLEX (2 REQUIRED)
ANN16	FIBER PATCH PANEL – EXIT GATE BOOTH	MOXA 8 – EXIT GATE BOOTH	SC–ST FIBER PATCH CABLE	6'	SM DUPLEX (2 REQUIRED)
ANN17	FIBER PATCH PANEL – EXIT GATE BOOTH	MOXA 9 – EXIT GATE BOOTH	SC–ST FIBER PATCH CABLE	6'	SM DUPLEX (2 REQUIRED)
ANN18	FIBER PATCH PANEL – EXIT GATE BOOTH	MOXA 10 – EXIT GATE BOOTH	SC–ST FIBER PATCH CABLE	6'	SM DUPLEX (2 REQUIRED)
ANN19	MOXA 7 – BOOTH EQUIPMENT RACK	ANI – EXIT GATE BOOTH	ALPHA 35484	35'	NO SUBSTITUTIONS ALLOWED
ANN20	MOXA 8 – BOOTH EQUIPMENT RACK	ANI – EXIT GATE BOOTH	ALPHA 35484	35'	NO SUBSTITUTIONS ALLOWED
ANN21	MOXA 9 – BOOTH EQUIPMENT RACK	ANI LANE 1 – EXIT GATE BOOTH	ALPHA 35484	35'	NO SUBSTITUTIONS ALLOWED
ANN22	MOXA 10 – BOOTH EQUIPMENT RACK	ANI LANE 2 – EXIT GATE BOOTH	ALPHA 35484	35'	NO SUBSTITUTIONS ALLOWED
ASC01	ASC 7	CAT6 PATCH PANEL	PRIMUS C6MXT–2045BK	50'	ALT: HYPERLINE STP4–C6–SOLID–OUTDOOR–40
ASC02	ASC 8	CAT6 PATCH PANEL	PRIMUS C6MXT–2045BK	50'	ALT: HYPERLINE STP4–C6–SOLID–OUTDOOR–40
ASC03	ASC 4	CAT6 PATCH PANEL	PRIMUS C6MXT–2045BK	210'	ALT: HYPERLINE STP4–C6–SOLID–OUTDOOR–40
ASC04	CAT6 PATCH PANEL	ETHERNET SWITCH – BOOTH	CAT6 PATCH CABLE	6'	
ASC05	CAT6 PATCH PANEL	ETHERNET SWITCH – BOOTH	CAT6 PATCH CABLE	6'	
ASC06	CAT6 PATCH PANEL	ETHERNET SWITCH – BOOTH	CAT6 PATCH CABLE	6'	
ASC07	ASC 2	MEDIA CONVERTER – ASC 2 POLE	PRIMUS C6MXT–2045BK	50'	ALT: HYPERLINE STP4–C6–SOLID–OUTDOOR–40
ASC08	ASC 6	MEDIA CONVERTER – ASC 6 POLE	PRIMUS C6MXT–2045BK	50'	ALT: HYPERLINE STP4–C6–SOLID–OUTDOOR–40
ASC09	ASC DVR	HDMI WALL PLATE	HDMI CABLE	35'	WILL REQUIRE DISPLAY PORT TO HDMI ADAPTOR
ASC10	HDMI WALL PLATE	ASC MONITOR	HDMI CABLE	6'	
ASC12	ASC DVR	CAT6 PATCH PANEL	CAT6 PATCH CABLE	6'	USED FOR ASC MOUSE WITH ITEM 530
ASC13	QUADROPLEX DATA PORT	ASC MOUSE	CAT6 PATCH CABLE	6'	USED FOR ASC MOUSE WITH ITEM 530
ASC14	ASC COMPUTER	CAT6 PATCH PANEL	CAT6 PATCH CABLE	6'	USED FOR NETWORK CONNECTION
ASC15	CAT6 PATCH PANEL	ETHERNET SWITCH – BOOTH	CAT6 PATCH CABLE	6'	USED FOR NETWORK CONNECTION
ASC16	ASC 5	MEDIA CONVERTER – ASC 5 POLE	PRIMUS C6MXT–2045BK	50'	ALT: HYPERLINE STP4–C6–SOLID–OUTDOOR–40
ASC17	ASC 1	MEDIA CONVERTER – ASC 1 POLE	PRIMUS C6MXT–2045BK	50'	ALT: HYPERLINE STP4–C6–SOLID–OUTDOOR–40
ASC18	ASC 3	MEDIA CONVERTER – ASC 3 POLE	PRIMUS C6MXT–2045BK	50'	ALT: HYPERLINE STP4–C6–SOLID–OUTDOOR–40
ASC19	MEDIA CONVERTER – ASC 1 POLE	FIBER PATCH PANEL – ASC 1 POLE	SC–LC FIBER PATCH CABLE	6'	SM DUPLEX
ASC20	MEDIA CONVERTER – ASC 3 POLE	FIBER PATCH PANEL – ASC 3 POLE	SC–LC FIBER PATCH CABLE	6'	SM DUPLEX
ASC21	FIBER PATCH PANEL – CCB	MEDIA CONVERTER – ASC 7 LANE 1 CCB	SC–LC FIBER PATCH CABLE	6'	SM DUPLEX
ASC22	FIBER PATCH PANEL – BOOTH	MEDIA CONVERTER – ASC 8 BOOTH EQ CABINET	SC–LC FIBER PATCH CABLE	6'	SM DUPLEX
ASC23	MEDIA CONVERTER – ASC 7 LANE 1 CCB	ETHERNET SWITCH – CCB	CAT6 PATCH CABLE	6'	SM DUPLEX
ASC24	MEDIA CONVERTER – ASC 8 BOOTH EQ CABINET	ETHERNET SWITCH – BOOTH	CAT6 PATCH CABLE	6'	SM DUPLEX
ASC25	MEDIA CONVERTER – ASC 2 POLE	FIBER PATCH PANEL – ASC 2 POLE	SC–LC FIBER PATCH CABLE	6'	SM DUPLEX
ASC26	MEDIA CONVERTER – ASC 6 POLE	FIBER PATCH PANEL – ASC 6 POLE	SC–LC FIBER PATCH CABLE	6'	SM DUPLEX
ASC27	MEDIA CONVERTER – ASC 5 POLE	FIBER PATCH PANEL – ASC 5 POLE	SC–LC FIBER PATCH CABLE	6'	SM DUPLEX
ASC28	ASC COMPUTER	ETHERNET SWITCH – EXIT GATE BOOTH	CAT6 PATCH CABLE	6'	
ASC29	ASC COMPUTER	ASC MONITOR – EXIT GATE BOOTH	HDMI CABLE	35'	
C01	FIBER PATCH PANEL – TRUCK EXIT BOOTH	FIBER PATCH PANEL – STRAD BOOTH	PRIMUS DX024DSLX9KAA2	~4500'	24 STRAND SM DIRECT BURIAL FIBER, VERIFY LIENGTH
C02	FIBER PATCH PANEL – STRAD BOOTH	ETHERNET SWITCH – STRAD BOOTH	SC–LC FIBER PATCH CABLE	6'	SM DUPLEX
C03	FIBER PATCH PANEL – STRAD BOOTH	ETHERNET SWITCH – STRAD BOOTH	SC–LC FIBER PATCH CABLE	6'	SM DUPLEX – USED FOR CBP NETWORK
C04	FIBER PATCH PANEL – TRUCK EXIT BOOTH	ETHERNET SWITCH – TRUCK EXIT BOOTH	SC–LC FIBER PATCH CABLE	6'	SM DUPLEX
C05	ETHERNET SWITCH – STRAD BOOTH	CAT6 PATCH PANEL	CAT6 PATCH CABLE	6'	
C06	ETHERNET SWITCH – STRAD BOOTH	CAT6 PATCH PANEL	CAT6 PATCH CABLE	6'	
C07	ETHERNET SWITCH – STRAD BOOTH	CAT6 PATCH PANEL	CAT6 PATCH CABLE	6'	
C08	FIBER PATCH PANEL – STRAD BOOTH	FIBER PATCH PANEL – CCB LANE 1	PRIMUS DX024DSLX9KAA2	1900'	24 STRAND SM DIRECT BURIAL FIBER
C09	FIBER PATCH PANEL – CCB LANE 1	ETHERNET SWITCH – CCB LANE 1	SC–LC FIBER PATCH CABLE	3'	
C10	CAT6 PATCH PANEL	QUADPLEX DATA PORT	(4) BELDEN 7940A	25'	ALT: BELDEN 7927A OR MOHAWK M58155
C11	CAT6 PATCH PANEL	QUADPLEX DATA PORT	(4) BELDEN 7940A	25'	ALT: BELDEN 7927A OR MOHAWK M58155
C12	CAT6 PATCH PANEL	QUADPLEX DATA PORT	(2) BELDEN 7940A	25'	ALT: BELDEN 7927A OR MOHAWK M58155
C13	QUADPLEX DATA PORT	MONITOR COMPUTER – STRAD BOOTH	CAT6 PATCH CABLE	6'	
C14	QUADPLEX DATA PORT	CBP WORKSTATION – STRAD BOOTH	CAT6 PATCH CABLE	6'	
C15	FIBER PATCH PANEL – CCB LANE 1	FIBER PATCH PANEL – CCB LANE 2	PRIMUS DX024DSLX9KAA2	390'	24 STRAND SM DIRECT BURIAL FIBER
C16	FIBER PATCH PANEL – CCB LANE 2	ETHERNET SWITCH – CCB LANE 2	SC–LC FIBER PATCH CABLE	3'	
C20	FIBER PATCH PANEL – ASC 1 POLE	FIBER PATCH PANEL – CCB LANE 1	PRIMUS DX012DSLX9KAA2	960'	12 STRAND SM DIRECT BURIAL FIBER
C21	FIBER PATCH PANEL – ASC 3 POLE	FIBER PATCH PANEL – BOOTH	PRIMUS DX012DSLX9KAA2	790'	12 STRAND SM DIRECT BURIAL FIBER
C22	FIBER PATCH PANEL – ASC 6 POLE	FIBER PATCH PANEL – CCB LANE 1	PRIMUS DX012DSLX9KAA2	570'	12 STRAND SM DIRECT BURIAL FIBER
C23	FIBER PATCH PANEL – ASC 2 POLE	FIBER PATCH PANEL – CCB LANE 1	PRIMUS DX012DSLX9KAA2	550'	12 STRAND SM DIRECT BURIAL FIBER
C24	FIBER PATCH PANEL – ASC 5 POLE	FIBER PATCH PANEL – CCB LANE 1	PRIMUS DX012DSLX9KAA2	550'	12 STRAND SM DIRECT BURIAL FIBER

DET01	CONTROL BOX 1	LANE 1 RSP 1	ALPHA 35484	75'	NO SUBSTITUTIONS ALLOWED
DET02	CONTROL BOX 1	LANE 1 RSP 2	ALPHA 35484	35'	NO SUBSTITUTIONS ALLOWED
DET03	LANE 1 RSP 1	LANE 1 RSP 3	ALPHA 35484	15'	NO SUBSTITUTIONS ALLOWED
DET04	LANE 1 RSP 2	LANE 1 RSP 4	ALPHA 35484	15'	NO SUBSTITUTIONS ALLOWED
DET05	LANE 1 RSP 3	LANE 1 RSP 5	ALPHA 35484	20'	NO SUBSTITUTIONS ALLOWED
DET06	LANE 1 RSP 4	LANE 1 RSP 6	ALPHA 35484	20'	NO SUBSTITUTIONS ALLOWED
DET07	LANE 1 RSP 5	LANE 1 RSP 7	ALPHA 35484	15'	NO SUBSTITUTIONS ALLOWED
DET08	LANE 1 RSP 6	LANE 1 RSP 8	ALPHA 35484	15'	NO SUBSTITUTIONS ALLOWED
DET09	LANE 1 RSP 7	LANE 1 RSP 9	ALPHA 35484	20'	NO SUBSTITUTIONS ALLOWED
DET10	LANE 1 RSP 8	LANE 1 RSP 10	ALPHA 35484	20'	NO SUBSTITUTIONS ALLOWED
DET11	LANE 1 RSP 9	LANE 1 RSP 11	ALPHA 35484	15'	NO SUBSTITUTIONS ALLOWED
DET12	LANE 1 RSP 10	LANE 1 RSP 12	ALPHA 35484	15'	NO SUBSTITUTIONS ALLOWED
DET13	LANE 1 RSP 11	LANE 1 RSP 13	ALPHA 35484	100'	NO SUBSTITUTIONS ALLOWED
DET14	LANE 1 RSP 12	LANE 1 RSP 14	ALPHA 35484	100'	NO SUBSTITUTIONS ALLOWED
DET15	LANE 1 RSP 13	LANE 1 RSP 15	ALPHA 35484	20'	NO SUBSTITUTIONS ALLOWED
DET16	CONTROL BOX 2	LANE 2 RSP 1	ALPHA 35484	75'	NO SUBSTITUTIONS ALLOWED
DET17	CONTROL BOX 2	LANE 2 RSP 2	ALPHA 35484	35'	NO SUBSTITUTIONS ALLOWED
DET18	LANE 2 RSP 1	LANE 2 RSP 3	ALPHA 35484	15'	NO SUBSTITUTIONS ALLOWED
DET19	LANE 2 RSP 2	LANE 2 RSP 4	ALPHA 35484	15'	NO SUBSTITUTIONS ALLOWED
DET20	LANE 2 RSP 3	LANE 2 RSP 5	ALPHA 35484	20'	NO SUBSTITUTIONS ALLOWED
DET21	LANE 2 RSP 4	LANE 2 RSP 6	ALPHA 35484	20'	NO SUBSTITUTIONS ALLOWED
DET22	LANE 2 RSP 5	LANE 2 RSP 7	ALPHA 35484	15'	NO SUBSTITUTIONS ALLOWED
DET23	LANE 2 RSP 6	LANE 2 RSP 8	ALPHA 35484	15'	NO SUBSTITUTIONS ALLOWED
DET24	LANE 2 RSP 7	LANE 2 RSP 9	ALPHA 35484	20'	NO SUBSTITUTIONS ALLOWED
DET25	LANE 2 RSP 8	LANE 2 RSP 10	ALPHA 35484	20'	NO SUBSTITUTIONS ALLOWED
DET26	LANE 2 RSP 9	LANE 2 RSP 11	ALPHA 35484	15'	NO SUBSTITUTIONS ALLOWED
DET27	LANE 2 RSP 10	LANE 2 RSP 12	ALPHA 35484	15'	NO SUBSTITUTIONS ALLOWED
DET28	LANE 2 RSP 11	LANE 2 RSP 13	ALPHA 35484	100'	NO SUBSTITUTIONS ALLOWED
DET29	LANE 2 RSP 12	LANE 2 RSP 14	ALPHA 35484	100'	NO SUBSTITUTIONS ALLOWED
DET30	LANE 2 RSP 13	LANE 2 RSP 15	ALPHA 35484	20'	NO SUBSTITUTIONS ALLOWED
GL1	PLC – EQUIPMENT BANK LANE 1	LANE 1 UPSTREAM GATE LOOP	ALPHA 35484	60'	ALPHA 35110
GL2	PLC – EQUIPMENT BANK LANE 1	LANE 1 DOWNSTREAM GATE LOOP	ALPHA 35484	75'	ALPHA 35110
GL3	PLC – EQUIPMENT BANK LANE 1	LANE 2 UPSTREAM GATE LOOP	ALPHA 35484	420'	ALPHA 35110
GL4	PLC – EQUIPMENT BANK LANE 1	LANE 2 DOWNSTREAM GATE LOOP	ALPHA 35484	430'	ALPHA 35110
HMI1	HMI	QUADPLEX DATA PORT	CAT6 PATCH CABLE	25'	
PLC01	CONTROL BOX – LANE 1	PLC – EQUIPMENT BANK LANE 1	ALPHA 35110	30'	ALT: ALPHA 35485/35199/35125
PLC02	CONTROL BOX – LANE 2	PLC – EQUIPMENT BANK LANE 1	ALPHA 35110	370'	ALT: ALPHA 35485/35199/35125
PLC03	PLC – EQUIPMENT BANK LANE 1	ETHERNET SWITCH – CCB	PRIMUS C6MXT–2045BK	10'	ALT: HYPERLINE STP4–C6–SOLID–OUTDOOR–40
RPM1	CONTROL BOX – LANE 1	ETHERNET SWITCH – CCB	PRIMUS C6MXT–2045BK	30'	ALT: HYPERLINE STP4–C6–SOLID–OUTDOOR–40
RPM2	CONTROL BOX – LANE 2	ETHERNET SWITCH – CCB	PRIMUS C6MXT–2045BK	370'	ALT: HYPERLINE STP4–C6–SOLID–OUTDOOR–40
SOH1	CONTROL BOX – LANE 1	BATTERY BOX – LANE 1	(1) 6–CONDUCTOR FLAT CABLE	6'	RJ–12 CONNECTOR
SOH2	CONTROL BOX – LANE 2	BATTERY BOX – LANE 2	(1) 6–CONDUCTOR FLAT CABLE	6'	RJ–12 CONNECTOR
T01	VIS RELAYS LANE 1	RSP 1 – LANE 1	ALPHA 35372	50'	
T02	VIS RELAYS LANE 1	FRONT VIS CAMERA – LANE 1	ALPHA 35372	75'	
T03	VIS RELAYS LANE 1	SIDE VIS CAMERA – LANE 1	ALPHA 35372	100'	
T04	VIS RELAYS LANE 1	REAR VIS CAMERA – LANE 1	ALPHA 35372	125'	
T05	VIS RELAYS LANE 2	RSP 1 – LANE 2	ALPHA 35372	50'	
T06	VIS RELAYS LANE 2	FRONT VIS CAMERA – LANE 2	ALPHA 35372	75'	
T07	VIS RELAYS LANE 2	SIDE VIS CAMERA – LANE 2	ALPHA 35372	100'	
T08	VIS RELAYS LANE 2	REAR VIS CAMERA – LANE 2	ALPHA 35372	125'	
TEL1	TELCO DEMARCATION – BOOTH	CAT6 PATCH PANEL	CAT6 ROHS	25'	
TEL2	TELCO DEMARCATION – BOOTH	CAT6 PATCH PANEL	CAT6 ROHS	25'	
TEL3	QUADPLEX DATA PORT	TELEPHONE	CAT3 ROHS	15'	
TEL4	QUADPLEX DATA PORT	FAX	CAT3 ROHS	15'	
VIS1	VIS J–BOX, LANE 1 FRONT	ETHERNET SWITCH – CCB	PRIMUS C6MXT–2035BK	75'	ALT: HYPERLINE STP4–C6–SOLID–OUTDOOR–40
VIS2	VIS J–BOX, LANE 1 SIDE	ETHERNET SWITCH – CCB	PRIMUS C6MXT–2035BK	100'	ALT: HYPERLINE STP4–C6–SOLID–OUTDOOR–40
VIS3	VIS J–BOX, LANE 1 REAR	ETHERNET SWITCH – CCB	PRIMUS C6MXT–2035BK	125'	ALT: HYPERLINE STP4–C6–SOLID–OUTDOOR–40
VIS4	VIS J–BOX, LANE 2 FRONT	ETHERNET SWITCH – CCB	PRIMUS C6MXT–2035BK	175'	ALT: HYPERLINE STP4–C6–SOLID–OUTDOOR–40
VIS5	VIS J–BOX, LANE 2 SIDE	ETHERNET SWITCH – CCB	PRIMUS C6MXT–2035BK	200'	ALT: HYPERLINE STP4–C6–SOLID–OUTDOOR–40
VIS6	VIS J–BOX, LANE 2 REAR	ETHERNET SWITCH – CCB	PRIMUS C6MXT–2035BK	225'	ALT: HYPERLINE STP4–C6–SOLID–OUTDOOR–40

PAMELA A. ARNESEN, STATE OF WASHINGTON, 38423, REGISTERED PROFESSIONAL ENGINEER
4/18/16

UNCLASSIFIED

Meier ARCHITECTURE • ENGINEERING
Job No: 7833
www.meierinc.com
8697 Gage Boulevard
Kennewick, WA 99336
P: 509.735.1589
F: 509.783.5075

PORT OF TACOMA – PCT STRADDLE CARRIER PORTAL COMMS CABLE SCHEDULE

ISSUE DATE	CROSSING CODE	SCALE
4/18/16	17031	NONE

SIZE	DWG NO	DWG CODE	SHEET NO	SHEETS	REV
F	WS8933		21	25	1

\PROJECTS\7800\7833 Tacoma Straddle Carrier\DWG\WS8933_21_1.dwg - Apr 18,2016 - 02:38pm - mtd
Apr 18, 2016 ~ 02:38pm ~ mtdavolle

POWER CABLE SCHEDULE

ID	FROM	TO	CABLE TYPE	CABLE LENGTH	REMARKS
B01	PLC – EQUIPMENT BANK LANE 1	BEACON – LANE 1	(3) THWN 12 AWG	130'	
B02	PLC – EQUIPMENT BANK LANE 1	BEACON – LANE 1	(3) THWN 12 AWG	130'	
B03	PLC – EQUIPMENT BANK LANE 1	BEACON – LANE 2	(3) THWN 12 AWG	470'	
B04	PLC – EQUIPMENT BANK LANE 1	BEACON – LANE 2	(3) THWN 12 AWG	470'	
P01	EXST TRANSFORMER – BOOTH	MAIN ELECTRICAL DISCONNECT	(3) THWN 2/0 AWG	EXST	
P02	MAIN ELECTRICAL DISCONNECT	MANUAL TRANSFER SWITCH	(3) THWN 2/0 AWG + 6 GND	EXST	
P03	MANUAL TRANSFER SWITCH	BOOTH POWER PANEL "A"	(3) THWN 2/0 AWG + 6 GND	EXST	
P04	MANUAL TRANSFER SWITCH	GENERATOR PLUG	(3) THWN 2/0 AWG + 6 GND	EXST	
P05	POWER PANEL "A"	UPS – BOOTH			PRE–INSTALLED CIRCUIT
P06	UPS – BOOTH	POWER STRIP – BOOTH EQUIPMENT RACK	(3) 12 AWG	10'	
P07	UPS – BOOTH	PLUG MOLD – BOOTH			SUPPLIED CABLE
P08					NOT USED
P09	24VAC POWER SUPPLY	ASC 1	(3) 16 AWG	50'	
P10	24VAC POWER SUPPLY	ASC 2	(3) 16 AWG	50'	
P11	24VAC POWER SUPPLY	ASC 4	(3) 16 AWG	210'	
P12	24VDC POWER SUPPLY	MOXA MC 3 – BOOTH EQUIPMENT CABINET	BELDEN 9156 OR EQUIVELENT	15'	ALSO USED TO POWER THE ANNUNCIATOR
P13	24VDC POWER SUPPLY	MOXA MC 4 – BOOTH EQUIPMENT CABINET	BELDEN 9156 OR EQUIVELENT	15'	ALSO USED TO POWER THE ANNUNCIATOR
P15	24VDC POWER SUPPLY	MOXA MC 5 – BOOTH EQUIPMENT CABINET	BELDEN 9156 OR EQUIVELENT	15'	ALSO USED TO POWER THE ANNUNCIATOR
P16	24VDC POWER SUPPLY	MOXA MC 6 – BOOTH EQUIPMENT CABINET	BELDEN 9156 OR EQUIVELENT	15'	ALSO USED TO POWER THE ANNUNCIATOR
P20	SOURCE PANEL	TRANSFORMER – LANE 1	TBD	TBD	
P21	TRANSFORMER – LANE 1	LANE POWER PANEL "B"	(3) THWN 3/0 AWG	15'	
P22	LANE POWER PANEL "B"	LANE 1 BATTERY BOX	(3) 12 AWG	20'	
P23	LANE POWER PANEL "B"	LANE 2 BATTERY BOX	(3) 12 AWG	370'	
P24	LANE POWER PANEL "B"	LANE 1 ALPHA UPS	(3) 12 AWG	15'	
P25	LANE POWER PANEL "B"	LANE PLC – VIS LIGHTS	(3) 12 AWG	110'	
P26	LANE POWER PANEL "B"	LANE PLC – HEATER	(3) 12 AWG	15'	
P27	LANE POWER PANEL "B"	LANE 1 CCB – HEATER	(3) 12 AWG	35'	
P28	ALPHA UPS	LANE PLC RECEPTICLE	(3) 12 AWG	15'	REQUIRES RECEPTICLE AND PLUG/CORD FOR PLC
P29	ALPHA UPS	LANE 1 CCB – RECEPTICLE	(3) 12 AWG	30'	
P30	LANE 1 BATTERY BOX	LANE 1 CONTROL BOX	(3) 12 AWG	5'	
P31	LANE 2 BATTERY BOX	LANE 2 CONTROL BOX	(3) 12 AWG	5'	
P32	LANE PLC – VIS	LANE 1 VIS LIGHT FRONT	(3) 12 AWG	110'	
P33	LANE 1 VIS LIGHT FRONT	LANE 1 VIS LIGHT SIDE	(3) 12 AWG	60'	
P34	LANE 1 VIS LIGHT SIDE	LANE 1 VIS LIGHT REAR	(3) 12 AWG	60'	
P35	LANE PLC – VIS	LANE 2 VIS LIGHT FRONT	(3) 12 AWG	110'	
P36	LANE 2 VIS LIGHT FRONT	LANE 2 VIS LIGHT SIDE	(3) 12 AWG	60'	
P37	LANE 2 VIS LIGHT SIDE	LANE 2 VIS LIGHT REAR	(3) 12 AWG	60'	
P38	24VDC POWER SUPPLY	LANE 1 POE INJECTOR FRONT	BELDEN 9156 OR EQUIVELENT	35'	
P39	24VDC POWER SUPPLY	LANE 1 POE INJECTOR SIDE	BELDEN 9156 OR EQUIVELENT	35'	
P40	24VDC POWER SUPPLY	LANE 1 POE INJECTOR REAR	BELDEN 9156 OR EQUIVELENT	35'	
P41	24VDC POWER SUPPLY	LANE 2 POE INJECTOR FRONT	BELDEN 9156 OR EQUIVELENT	35'	
P42	24VDC POWER SUPPLY	LANE 2 POE INJECTOR SIDE	BELDEN 9156 OR EQUIVELENT	35'	
P43	24VDC POWER SUPPLY	LANE 2 POE INJECTOR REAR	BELDEN 9156 OR EQUIVELENT	35'	
P44	24VDC POWER SUPPLY	MOXA MC LANE 1 – BOOTH EQUIPMENT CABINET	BELDEN 9156 OR EQUIVELENT	5'	
P45	24VDC POWER SUPPLY	MOXA MC LANE 2 – BOOTH EQUIPMENT CABINET	BELDEN 9156 OR EQUIVELENT	5'	
P46	24VAC OUTDOOR POWER SUPPLY – ASC 2	ASC 2	(3) 16 AWG	60'	
P47	24VAC OUTDOOR POWER SUPPLY – ASC 5	ASC 5	(3) 16 AWG	60'	
P48	24VAC OUTDOOR POWER SUPPLY – ASC 1	ASC 1	(3) 16 AWG	60'	
P49	24VAC OUTDOOR POWER SUPPLY – ASC 6	ASC 6	(3) 16 AWG	60'	
P50	24VAC OUTDOOR POWER SUPPLY – ASC 3	ASC 3	(3) 16 AWG	60'	
P60	LANE POWER PANEL "B"	LANE 2 CCB – HEATER	(3) 12 AWG	370'	
P61	LANE POWER PANEL "B"	LANE 2 ALPHA UPS	(3) 12 AWG	370'	
P62	LANE 2 ALPHA UPS	LANE 2 CCB RECEPTICLE	(3) 12 AWG	10'	
SC1	UPS POWER	DOOR ACCESS CONTROLLER	(3) 14 AWG	25'	
SC2	24VDC POWER SUPPLY	DOOR ACCESS CONTROLLER	(2) 18 AWG	25'	
SC3	DOOR ACCESS CONTROLLER	ELECTRIC STRIKE – DOOR	(2) 18 AWG	15'	
SC4	DOOR ACCESS CONTROLLER	CARD READER/CIPHER	ALPHA 1298C	20'	
SC5	DOOR ACCESS CONTROLLER	LOCK OUT BUTTON	(2) 18 AWG	15'	
SC6	DOOR ACCESS CONTROLLER	FREE EXIT BUTTON ASSEMBLY	(2) 18 AWG SHIELDED CABLE	30'	
TL1	PLC – EQUIPMENT BANK LANE 1	LANE 1 UPSTREAM TRAFFIC LIGHT	(4) THWN 12 AWG	75'	
TL2	PLC – EQUIPMENT BANK LANE 1	LANE 2 UPSTREAM TRAFFIC LIGHT	(4) THWN 12 AWG	420'	

4/18/16

UNCLASSIFIED

Meier ARCHITECTURE • ENGINEERING
Job No: 7833
www.meierinc.com
8697 Gage Boulevard
Kennewick, WA 99336
P: 509.735.1589
F: 509.783.5075

PORT OF TACOMA – PCT STRADDLE CARRIER PORTAL POWER CABLE SCHEDULE

ISSUE DATE	CROSSING CODE	SCALE
4/18/16	17031	NONE

SIZE	DWG NO	DWG CODE	SHEET NO	SHEETS	REV
F	WS8933		22	25	1

\PROJECTS\7800\7833 Tacoma Straddle Carrier\DWG\WS8933_22_1.dwg - Apr 18,2016 - 02:38pm - mtd
Apr 18, 2016 ~ 02:38pm ~ midavalle

CONDUIT SCHEDULE					
ID	FROM	TO	SIZE	FILL	REMARKS
COMMUNICATION					
CC01	EXST BOOTH WIRE GUTTER	EXST COMM VAULT – BOOTH	EXST	ASC03, C01, C08, C21	USE EXST CONDUIT
CC02	EXST COMM VAULT – BOOTH	ASC 3 – EXST LIGHT POLE	EXST	ASC03	USE EXST CONDUIT FROM VAULT TO LIGHT POLE
CC03	LANE 1 EQUIPMENT BANK – PASSENGER SIDE	LANE 2 EQUIPMENT BANK – PASSENGER SIDE	4"	C15, GL3, GL4, PLC2	
CC04	LANE 1 EQUIPMENT BANK – PASSENGER SIDE	LANE 1 DRIVER SIDE	4"	DET02, T2, VIS1	
CC05	LANE 1 EQUIPMENT BANK – PASSENGER SIDE	LANE 1 CENTER	4"	DET13, DET14	
CC06	LANE 1 EQUIPMENT BANK – PASSENGER SIDE	JB – DOWNSTREAM LOOP CONTROLLER	2"	GL2	
CC07	LANE 2 EQUIPMENT BANK – PASSENGER SIDE	LANE 2 DRIVER SIDE	4"	C15, DET17, GL3, GL4, PLC2, T6, VIS4	
CC08	LANE 2 EQUIPMENT BANK – PASSENGER SIDE	LANE 2 EQUIPMENT BANK – CENTER	4"	DET28, DET29	
CC09	LANE 2 EQUIPMENT BANK – PASSENGER SIDE	JB – DOWNSTREAM LOOP CONTROLLER	2"	GL4	
CC10	EXST COMM VAULT – BOOTH	EXST TRUCK EXIT GATE BOOTH	2"	C01	USE EXST CONDUIT WERE AVAILABLE
CC11	EXST COMM VAULT – BOOTH	EXST COMM VAULT – ASC 8	EXST	C08, C21	USE EXST CONDUIT
CC12	LANE 1 EQUIPMENT BANK – PASSENGER SIDE	EXST COMM VAULT – LANE 1	4"	ASC08, C08, C21, C22	
CC13	EXST COMM VAULT – ASC 8	EXST COMM VAULT – ASC 5	EXST	C08	
CC14	EXST COMM VAULT – LANE 1	EXST COMM VAULT – ASC 5	EXST	C08, C22	
CC15	EXST COMM VAULT – LANE 1	EXST COMM VAULT – ASC 4 & 6	EXST	C20, C23, C24	
CC16	EXST COMM VAULT – ASC 4 & 6	EXST COMM VAULT – ASC 7	EXST	C20	
CC17	EXST COMM VAULT – ASC 5	ASC 5 – EXST LIGHT POLE	2"	C22	USE EXST CONDUIT FROM VAULT TO LIGHT POLE
CC18	EXST COMM VAULT – ASC 8	ASC 8 JB – EXST LIGHT POLE	2"	C21	USE EXST CONDUIT FROM VAULT TO LIGHT POLE
CC19	ASC 8 JB – EXST LIGHT POLE	ASC 8	1"	ASC18	
CC20	EXST COMM VAULT – ASC 4 & 6	ASC 4 & 6 – EXST LIGHT POLE	2"	C23, C24	USE EXST CONDUIT FROM VAULT TO LIGHT POLE
CC21	EXST COMM VAULT – ASC 7	ASC 7 JB – EXST LIGHT POLE	2"	C20	USE EXST CONDUIT FROM VAULT TO LIGHT POLE
CC22	ASC 7 JB – EXST LIGHT POLE	ASC 7	1"	ASC17	
CC23	NEW BOOTH WIRE GUTTER	BOOTH	EXST	ASC03, C01, C08, C21	
POWER					
PC01	BOOTH	EXST COMM VAULT – BOOTH	EXST	P11	USE EXST CONDUIT
PC02	EXST COMM VAULT – BOOTH	ASC 3 – EXST LIGHT POLE	EXST	P11	USE EXST CONDUIT FROM VAULT TO LIGHT POLE
PC03	LANE 1 EQUIPMENT BANK – PASSENGER SIDE	LANE 2 EQUIPMENT BANK – PASSENGER SIDE	4"	B03, B04, P23, P60, P61, TL2	
PC04	LANE 1 EQUIPMENT BANK – PASSENGER SIDE	LANE 1 DRIVER SIDE	4"	P34	
PC05	LANE 1 EQUIPMENT BANK – PASSENGER SIDE	LANE 1 CENTER	4"	SPARE	
PC06	LANE 1 EQUIPMENT BANK – PASSENGER SIDE	DOWNSTRAM TRAFFIC LIGHT AND BEACON	2"	B01, B02	
PC07	LANE 2 EQUIPMENT BANK – PASSENGER SIDE	LANE 2 DRIVER SIDE	4"	B03, B04, P23, P37, P60, P61, TL2	
PC08	LANE 2 EQUIPMENT BANK – PASSENGER SIDE	LANE 2 EQUIPMENT BANK – CENTER	4"	SPARE	
PC09	LANE 2 EQUIPMENT BANK – PASSENGER SIDE	DOWNSTRAM TRAFFIC LIGHT AND BEACON	2"	B03, B04	
PC10	NEW BOOTH WIRE GUTTER	NEW BOOTH WIRE GUTTER	EXST	P01, P11	

4/18/16

UNCLASSIFIED

Meier ARCHITECTURE•ENGINEERING
Job No: 7833
www.meierinc.com
8697 Gage Boulevard
Kennewick, WA 99336
P: 509.735.1589
F: 509.783.5075

PORT OF TACOMA – PCT
STRADDLE CARRIER PORTAL
CONDUIT SCHEDULE

ISSUE DATE	CROSSING CODE	SCALE
4/18/16	17031	NONE

SIZE	DWG NO	DWG CODE	SHEET NO	SHEETS	REV
F	WS8933		23	25	1

\PROJECTS\78000\7833 Tacoma Straddle Carrier\DWG\WS8933_23_1.dwg - Apr 18,2016 - 02:38pm - mtd
Apr 18, 2016 ~ 02:38pm ~ _mtdavalle

EQUIPMENT SCHEDULE

ID #	QTY	PART NAME	MANUFACTURER	PART NUMBER	PROVIDED BY	INSTALLED BY	REMARKS
100–RPM EQUIPMENT							
100	30	CARGO RPM RSP WITH SHROUD	LEIDOS	DET 21815–2 (N1)	SCP	CI	INCLUDED IN STRAD PORTAL
140	6	INTERIOR ALARM ANNUNCIATOR	LEIDOS	ANI 21771–1	RPMP	CI	
141	2	EXTERIOR ALARM ANNUNCIATOR	LEIDOS	ANE 21770–1	RPMP	CI	
160	2	CONTROL BOX	LEIDOS	CB 21920–1	SCP	CI	INCLUDED IN STRAD PORTAL
161	2	BATTERY BOX	LEIDOS	UPS 21921–1	SCP	CI	INCLUDED IN STRAD PORTAL
170	5	VEHICLE PRESENCE SENSOR KIT	BANNER	Q456EQ5 / Q45BB6RQ5	SCP	CI	INCLUDED IN STRAD PORTAL
172	1	VPS MOUNTING HARDWARE	VARIOUS	N/A	SCP	CI	INCLUDED IN STRAD PORTAL
	**ITEMS NEEDED TO MOUNT VEHICLE PRESENCE SENSORS IN ONE LANE (2 STANDS)						
	12	1/4–20UNC HEX BOLT (1–1/4 INCH LENGTH)	HEX BOLT	STAINLESS STEEL			
	12	1/4–20UNC HEX NUT	HEX NUT	STAINLESS STEEL			
	12	1/4 INCH LOCK WASHER	LOCK WASHER	STAINLESS STEEL			
	24	1/4 INCH FLAT WASHER	FLAT WASHER	STAINLESS STEEL			
173	2	VPS UNISTRUT (10ft SECTION)	UNISTRUT	P7000SS	SCP	CI	INCLUDED IN STRAD PORTAL
300–COMPUTER AND IP–NETWORK EQUIPMENT							
301	1	MONITOR COMPUTER			RPMP	CI	SPECIFIC MODELS MAY VARY
	**ITEMS NEEDED FOR EACH MONITOR COMPUTER						
	1	MONITOR COMPUTER	DELL	9020TM			
	1	FLAT–SCREEN MONITOR W / INTEGRATED SPEAKER	DELL	P1914S			
	1	PRINTER, COLOR INKJET	HP	OFFICEJET 6230			
	1	CABLE, USB, FOR PRINTER	VARIES	VARIES			
302	1	WORKSTATION COMPUTER			OIT	OIT	REIMBURSIBLE AGREEMENT WITH FACILITY OWNER / OPERATOR
	**ITEMS NEEDED FOR EACH WORKSTATION COMPUTER						
	1	WORKSTATION COMPUTER	OIT SPECIFIED SYSTEM COMPONENTS				
	1	FLAT–SCREEN MONITOR W / INTEGRATED SPEAKER					
	1	ALL–IN–ONE PRINTER / FAX / COPIER					
	1	PRINTER, COLOR INKJET					
	1	CABLE, USB, FOR PRINTER					
327	1	ETHERNET SWITCH – 24 PORT	CISCO SYSTEMS, INC	CATALYST 3750X–24P–S	OIT	OIT	REIMBURSIBLE AGREEMENT WITH FACILITY OWNER / OPERATOR
329	2	HARDENED ETHERNET SWITCH	CISCO SYSTEMS, INC	IE–3000–8TC + PWR–IE3000–AC	SCP	OIT	INCLUDED WITH STRAD PORTAL. NEEDS TO BE CONFIGURED BY OIT
330	1	EXPANSION MODULE FOR IE3000 W/PS	CISCO SYSTEMS, INC	IEM–3000–8TM	SCP	OIT	INCLUDED WITH STRAD PORTAL. NEEDS TO BE CONFIGURED BY OIT
333	4	SFP FOR SM FIBER (LC CONNECTOR)	CISCO SYSTEMS, INC	GLC–ZX–SM	OIT	OIT	REIMBURSIBLE AGREEMENT WITH FACILITY OWNER / OPERATOR
334	2	SFP FOR SM FIBER – RUGGIDIZED (LC CONNECTOR)	CISCO SYSTEMS, INC	GLC–ZX–SM–RGD	OIT	OIT	REIMBURSIBLE AGREEMENT WITH FACILITY OWNER / OPERATOR
337	1	CAT6 PATCH PANEL W / REQUIRED CONNECTORS	PANDUIT	DP24688TGY	CP	CI	
338	10	WALL MOUNTED FIBER PATCH PANEL W / REQUIRED CONNECTORS	PANDUIT	FWME4 + (4) FAP6WBUDSC	CP/SCP	CI	ONE PATCH PANEL WILL BE INCLUDED WITH THE STRAD PORTAL (SCP PROVIDED)
339	1	RACK MOUNTED FIBER PATCH PANEL W / REQUIRED CONNECTORS	PANDUIT	FCE1U + (4) FAP6WBUDSC	CP	CI	
340	4	IP MEDIA CONVERTER	ANTAIRA		CP	CI	REQUIRES 24VDC POWER SUPPLY (ID# 345, 545, OR OTHER). EACH MEDIA CONVERTER CONSUMES 528W POWER
	**ITEMS NEEDED FOR EACH IP MEDIA CONVERTER						
	1	MEDIA CONVERTER	ANTAIRA	IMC–1000A–SFP			
	1	SFP MODULE – SINGLE MODE, LC	ANTAIRA	SFP–S10–T			
342	10	MOXA – ANNUNCIATOR TO SINGLE–MODE FIBER MEDIA CONVERTER			CP	CI	REQUIRES 24VDC POWER SUPPLY (ID# 345, 545, OR OTHER)
	**ITEMS NEEDED FOR EACH ANNUNCIATOR MOXA MEDIA CONVERTER						
	1	MEDIA CONVERTER 485 – SINGLE MODE	MOXA	TCF–142–S–SC–T			
	1	FIBER PATCH CABLE, SC–SC	CONTRACTOR SPECIFIED				
345	4	24VDC POWER SUPPLY	ALTRONIX	R1224DC16CB	CP	CI	24VDC PWR FOR 16 DEVICES
346	4	24VDC POWER SUPPLY FOR IP MEDIA CONVERTER	ANTAIRA	MDR–10	CP	CI	FOR USE WITH ANTAIRA MEDIA CONVERTER
393	6	SURGE SUPRESSOR	LINX	CAT6–LAN	CP	CI	TO BE INSTALLED ON BOTH ENDS OF ALL CAT6 CABLES TERMINATING OUDOORS.
400–PLC AND TRAFFIC CONTROL EQUIPMENT							
411	1	3–LANE OUTDOOR WALL MOUNT PLC	PNNL		RPMP	CI	
	**ITEMS NEEDED FOR EACH PLC ASSEMBLY						
	1	PLC BASE KIT	NEWARK	68Y4848			
	2	PLC EXPANSION KIT	NEWARK	68Y4849			
424	2	RED BEACON WITH HORN	EDWARDS SIGNALING	51XBRFR24D	CP	CI	
425	2	AMBER BEACON WITH HORN	EDWARDS SIGNALING	51XBRFA24D	CP	CI	
426	2	8" RED / GREEN TRAFFIC LIGHT ASSEMBLY			CP	CI	
	**ITEMS NEEDED FOR EACH 8 inch RED / GREEN TRAFFIC LIGHT ASSEMBLY						
	1	8" RED LED SIGNAL MODULE	INDUSTRIAL TRAFFIC SOLUTIONS	6843			
	1	8" GREEN LED SIGNAL MODULE	INDUSTRIAL TRAFFIC SOLUTIONS	6845			
	2	8" BLACK, NEMA 4 HOUSING	INDUSTRIAL TRAFFIC SOLUTIONS	CH–8			
	1	MOUNTING HARDWARE	INDUSTRIAL TRAFFIC SOLUTIONS	2079			
	1	STAINLESS STEEL BOLTING KIT	INDUSTRIAL TRAFFIC SOLUTIONS	1071			
464	1	DESK TOP HUMAN MACHINE INTERFACE UNIT	HILINE ENGINEER	162–H2	RPMP	CI	SEAPORT
472	4	GROUND LOOP	PATRIOT DETECTION	CG9.5MM	CP	CI	ORDER TO DIMENSIONS SPECIFIED IN DRAWINGS
473	4	GROUND LOOP CONTROLLER	RENO A&E	BX–4	CP	CI	GOES WITH GROUND LOOP

500–MONITORING EQUIPMENT							
500	3	AREA SURVEILLANCE CAMAERA – FIXED			CP	CI	
	**ITEMS NEEDED FOR EACH PTZ ASC						
	1	PAN–TILT–ZOOM CAMERA W/LENS AND ENCLOSURE	HONEYWELL	HD4HDIH			
	1	WALL MOUNT	HONEYWELL	HD4CHIP–WK			
	1	POLE MOUNT ADAPTER	HONEYWELL	HDXPMA2			
501	4	AREA SURVEILLANCE CAMAERA – PTZ			CP	CI	
	**ITEMS NEEDED FOR EACH PTZ ASC						
	1	PAN–TILT–ZOOM CAMERA W/LENS AND ENCLOSURE	HONEYWELL	HDZ30HDE			
	1	WALL MOUNT	HONEYWELL	HDXWM2			
	1	POLE MOUNT ADAPTER	HONEYWELL	HDXPMA2			
509	1	AREA SURVEILLANCE DVR	HONEYWELL	HHSE32C1662T	CP	CI	
511	1	AREA SURVEILLANCE COMPUTER	DELL	PRECISION T1700	CP	CI	SPECS: CPU – INTEL i5 3.0 GHz OR BETTER RAM – 8 GB RAM (DDR3 OR BETTER) MINIMUM HARD DRIVE – 250–500 GB MIN VIDEO CARD – DEDICATED DIRECTX11 COMPATIBLE WITH 1GB RAM OR MORE NETWORK CARD – 1GB WIRED NETWORK INTERFACE CARD OPTICAL DRIVE – DVD =/– RW DRIVE CASE STYLE – SMALL FORM FACTOR PREFERRED
512	2	AREA SURVEILLANCE MONITOR	BENQ	XL2430T	CP	CI	
513	4	OUTDOOR POWER SUPPLY FOR ASC	HONEYWELL	HPTV2401WPZ	CP	CI	24VAC PWR FOR ONE ASC
514	1	24VAC POWER SUPPLY	ALTRONIX	R2416ULCB	CP/SCP	CI	24VAC PWR FOR 16 DEVICES (1 INLCLUDED WITH STRAD PORTAL)
515	1	USB ETHERNET EXTENDER	LOGEAR	GUCE51	CP	CI	CAN BE SUBSTITUTED WITH LIKE ITEM
540	2	VIS SIDE CAMERA ASSEMBLY			SCP	CI	WIDE ANGLE LENSE
	**ITEMS NEEDED FOR EACH VIS SIDE CAMERA ASSEMBLY						
	1	VIS CAMERA	IQINVISION	IQ862WE–W2			
	1	MOUNT ASSEMBLY	IQINVISION	IQA–CNR			
541	4	VIS FRONT/REAR CAMERA ASSEMBLY			SCP	CI	VARIABLE LENSE
	**ITEMS NEEDED FOR EACH VIS FRONT/REAR CAMERA ASSEMBLY						
	1	VIS CAMERA	IQINVISION	IQ862WE–V17			
	1	MOUNT ASSEMBLY	IQINVISION	IQA–CNR			
542	2	LED VIS LIGHT – 78W	RAB	FXLED78TN	SCP	CI	
543	4	LED VIS LIGHT – 150W	RAB	FXLED150TN	SCP	CI	
545	4	VIS CAMERA RELAY	PHOENIX CONTACT	2967060	SCP	CI	
546	1	OCR SOFTWARE LICENSE	HI–TECH SOLUTIONS		SCP	CI	
547	6	POE INJECTOR	RED LION	1000–POE+	SCP	CI	
600–BOOTH FURNISHINGS							
603	1	BOOTH 10' X 24' – LEFT HAND	PORTA–KING	BR2410 UL 752–LEVEL 3 (LEFT HAND)	EXST	EXST	
611	3	QUADPLEX DATA PORT	CONTRACTOR SPECIFIED	CONTRACTOR SPECIFIED	CP	CI	
612	1	WALL MOUNTED VIDEO PORT	CONTRACTOR SPECIFIED	CONTRACTOR SPECIFIED	CP	CI	USED FOR ASC MONITOR
624	1	FILE CABINET W/LOCK, 4 DRAWERS (52IN H X 15INW X 25IN D), BLACK	HON	HON514NP	CP	CI	
625	1	FILE CABINET W/LOCK, 2 DRAWERS (29IN H x15IN W x25IN D), BLACK	HON	HON512PP	CP	CI	
626	1	MOBILE PEDESTAL (BOX/BOX/FILE) 1600 SERIES	HON	1623P	CP	CI	
627	1	WALL CLOCK (10"), SELF ADJUSTING FOR DALIGHT SAVINGS TIME	STAPLES	SET2628	CP	CI	
628	1	WASTEBASKET	ELDON	BLACK POLYETHELENE, 7 GALLON	CP	CI	
629	1	OFFICE POWER STRIP – 6 OUTLET	POWER SENTRY	100112 – 6 OUTLET	CP	CI	6–OUTLET WALL–MOUNT/DESKTOP POWER STRIP
630	1	MULTI–LINE TELEPHONE, SPEAKERPHONE	PANASONIC	PANKXTSC14W, PANKXTSC14B	CP	CI	
631	1	LIGHT, CLIP ON DESK, 35W HALOGEN	LITE SOURCE	LS–165PS	CP	CI	
632	1	PRINTER STAND (8.5" X 18.5" X 12")	STAPLES	32989–US	CP	CI	
633	4	TASK CHAIR	BIG & TALL	OFM 700 NAVY	CP	CI	
634	2	DESK – (60LX24DX29.5H) – CHARCOAL	MAXON	WR6024T	CP	CI	
635	2	DESK – 3' 4" CONRNER SECTION (GRAY)	BUSH	BSHWC90466A	CP	CI	
636	1	DESK – 5' SECTION (GRAY)	BUSH	BSHWC90460A	CP	CI	
640	1	REFRIGERATOR	MAGIC CHEF	HMBR–44BE	CP	CI	
641	1	MICROWAVE	MAGIC CHEF	MCM–991B	CP	CI	
652	2	MOBILE CPU STAND, CPUS 4IN TO 9IN WIDE	RUBBERMAID	RUB–62413	CP	CI	
683	1	EQUIPMENT RACK – FULL HEIGHT			OIT	OIT	RECOMMENDED OIT CABINET; REIMBURSIBLE AGREEMENT WITH FACILITY OWNER / OPERATOR. COORDINATE INSTALLATION OF HARDWARE IN EQUIPMENT RACK WITH LOCAL OIT.
	**ITEMS NEEDED FOR EACH EQUIPMENT RACK ASSEMBLY – FULL HEIGHT						
	1	INDOOR EQUIPMENT RACK/CABINET	DELL	POWER EDGE 4220			
	3	RACK TRAYS					
690	1	60 AMP GENERATOR PLUG WITH CAP	HUBBELL	HBL36W & PC60	EXST	EXST	
691	1	GENERATOR PLUG BOX AND CAP	HUBBELL	BB601W & PC60	EXST	EXST	
692	1	MANUAL TRANSFER SWITCH			EXST	EXST	
693	1	MAIN ELECTRICAL DISCONNECT, 200A, 120/240V			EXST	EXST	

4/18/16

UNCLASSIFIED

Meier ARCHITECTURE • ENGINEERING
Job No: 7833
www.meierinc.com
8697 Gage Boulevard
Kennewick, WA 99336
P: 509.735.1589
F: 509.783.5075

PORT OF TACOMA – PCT STRADDLE CARRIER PORTAL EQUIPMENT SCHEDULE

ISSUE DATE	CROSSING CODE	SCALE	
4/18/16	17031	NONE	

SIZE	DWG NO	DWG CODE	SHEET NO	SHEETS	REV
F	WS8933		24	25	1

\PROJECTS\78007833 Tacoma Straddle Carrier\DWG\WS8933_24_1.dwg - Apr 18,2016 - 02:38pm - mtd
Apr 18, 2016 ~ 02:38pm ~ mtdavolle

EQUIPMENT SCHEDULE – CONTINUED							
ID #	QTY	PART NAME	MANUFACTURER	PART NUMBER	PROVIDED BY	INSTALLED BY	REMARKS
700–UPS, POWER PANELS, ENCLOSURES AND MISC EQUIPMENT							
706	1	UPS			CP	CI	
	**ITEMS NEEDED FOR EACH BOOTH UPS ASSEMBLY						
	1	UPS	LIEBERT	GXT4–3000 RT–120			
	3	EXTERNAL BATTERY FOR UPS	LIEBERT	GXT4–72VBAT			
709	2	NOVUS MICRO SERIES 1000 UPS	ALPHA	NOVUS MICRO SERIES 017–239–53	CP	CP	UL APPROVED, OUTDOOR RATED UPS
	**ITEMS NEEDED FOR EACH 100A POWER PANEL						
	1	BATTERY CABLE KIT FOR 18AH BATTERY	ALPHA	NOVUS MICRO SERIES 870–602–22			
	4	18HA BATTER	ALPHA	NOVUS MICRO SERIES 181–025–10			
727	1	POWER PANEL 200A	SQUARE D	Q0140M200RB	CP	CI	
	**ITEMS NEEDED FOR EACH 200A POWER PANEL						
	1	200A MAIN BREAKER	SQUARE D	WITH PANEL			
	1	EQUIPMENT GROUND BAR KIT	SQUARE D	PK15GTA			
	1	SURGE ARRESTOR	SQUARE D	Q02175SB			
760	2	400W ENCLOSURE HEATER	HOFFMAN	DAH4001B	CP	CI	
756	8	GROUNDING ROD	CONTRACTOR SPECIFIED	CONTRACTOR SPECIFIED	CP	CI	
779	2	COMMUNICATION CONTROL BOX			SCP	CI	SIZE ENCLOSURE APPROPRIATELY FOR COMPONENTS. MODIFY HEATER AS REQUIRED. INCLUDED WITH STRAD PORTAL
	**ITEMS NEEDED FOR EACH COMMUNICATIONS CONTROL BOX						
	1	36"X30"X12" SS ENCLOSURE	HOFFMAN	CSD363012SS			
	1	PADLOCKABLE HANDLE	HOFFMAN	CWHPTO			
	1	CONDUCTING BACK PANEL	HOFFMAN	SIZE ACCORDINGLY			
	1	QUAD OUTLET	CONTRACTOR SPECIFIED	CONTRACTOR SPECIFIED			
	1	400W ENCLOSURE HEATER	HOFFMAN	DAH4001B			
	1	STRAIN RELIEF CONNECTOR	LAPP USA	S2138			
781	1	TRANSFORMER 37.5KVA, 480–240/120, 1PH, 3W	CONTRACTOR SPECIFIED	CONTRACTOR SPECIFIED	CP	CI	
800–SECURITY EQUIPMENT							
800	14	PADLOCK	MASTER LOCK		RPMP	CI	GOVERNMENT INSTALLED
801	1	DOOR ACCESS CONTROLLER	IDENTIV	DIGITRAC M2	CP	CI	
802	1	CARD READER/CIPHER WITH ENCLOSURE	IDENTIV	DS47L–SSP–HID, MB5	CP	CI	
803	1	ELECTRIC STRIKE WITH DIODE			CP	CI	INSTALL DIODE AT ELECTRIC STRIKE. ELECTRIC STRIKE REQUIRES 24VDC POWER SUPPLY.
	**ITEMS NEEDED FOR EACH ELECTRIC STRIKE						
	1	24VDC ELECTRIC STRIKE	VON DUPRIN	6211–FSE–24–US32D			
	1	DIODE	IDENTIV	DIODE			
804	1	FREE EXIT BUTTON WITH LINE MODULE			CP	CI	CONCTRACTOR TO INSTALL LINE MODULE IN SINGLE GANG BOX AND MOUNT EXIT BUTTON
	**ITEMS NEEDED FOR EACH FREE EXIT BUTTON						
	1	BUTTON WITH BACKING PLATE	SCHLAGE	623–GR–EX–DP–626			
	1	LINE MODULE	IDENTIV	MELM 2			
	1	SURFACE MOUNT SINGLE GANG BOX	CONTRACTOR SPECIFIED	CONTRACTOR SPECIFIED			
805	1	LOCK–DOWN BUTTON	OMRON	A22EL–M–24A–11–B	CP	CI	INSTALL IN EXST SINGLE GANG BOX NEAR DOOR

4/18/16

UNCLASSIFIED

Meier ARCHITECTURE•ENGINEERING
Job No: 7833
www.meierinc.com
8697 Gage Boulevard
Kennewick, WA 99336
P: 509.735.1589
F: 509.783.5075

PORT OF TACOMA – PCT
STRADDLE CARRIER PORTAL
EQUIPMENT SCHEDULE

ISSUE DATE	CROSSING CODE	SCALE
4/18/16	17031	NONE

SIZE	DWG NO	DWG CODE	SHEET NO	SHEETS	REV
F	WS8933		25	25	1

\PROJECTS\78000\7833 Tacoma Straddle Carrier\DWG\WS8933_25_1.dwg - Apr 18,2016 - 02:38pm - rmd
Apr 18, 2016 – 02:38pm – rmdavalle

Homeland Security

Prepared for the U.S. Department of Homeland Security
U.S. Customs and Border Protection and Domestic Nuclear Detection Office
under U.S. Department of Energy Contract DE-AC05-76RL01830

RADIATION PORTAL MONITOR PROJECT

Radiation Portal Monitor Installation Addendum 1: WS

October 21, 2016

Pacific Northwest NATIONAL LABORATORY

Proudly Operated by Battelle *Since 1965*

LIMITED DISTRIBUTION NOTICE

This document copy, since it is transmitted in advance of patent clearance, is made available in confidence solely for use in performance of work under contracts with the U.S. Department of Energy. This document is not to be published nor its contents otherwise disseminated or used for purposes other than specified above before patent approval for such release or use has been secured, upon request, from Intellectual Property Services, Pacific Northwest National Laboratory, Richland, Washington 99352.

Addendum 1

The original design drawing (WS8933, REV1), including equipment list, has been revised as described in this document and the accompanying drawing set (WS8933, ADD1).

Design Sheets / Documents changed:

WS8933, REV1 sheets 18, 19, 22

Description of Change:

Two additional Moxa Media converters (Equipment item # 342) are required in the booth installation. In addition, annunciator cable and fiber optic patch cables will be required (ANN23, ANN24, ANN25, ANN26).

Pacific Northwest
NATIONAL LABORATORY

Proudly Operated by Battelle *Since 1965*

U.S. DEPARTMENT OF
ENERGY

902 Battelle Boulevard
P.O. Box 999
Richland, WA 99352
1-888-375-PNNL (7665)
www.pnl.gov

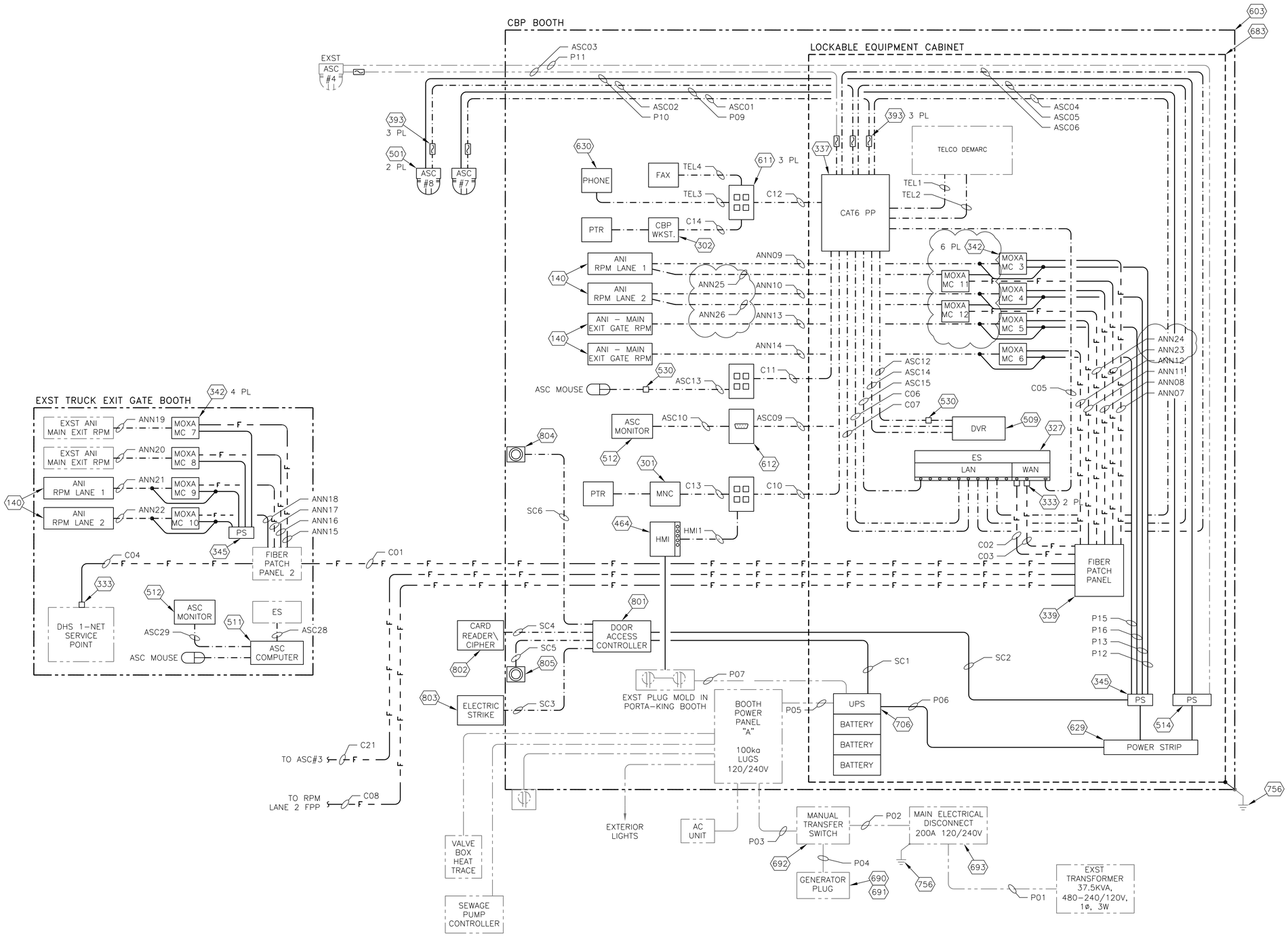

WIRING LEGEND

POWER

COMMUNICATION

EXST

NOTES:

1.) GROUND SURGE PROTECTION DEVICES TO NEAREST EARTH GROUND VIA #6 AWG WIRE.
2.) CAT 6 CABLE BETWEEN SPDS, SHIELD OR DRAIN WIRE SHALL BE GROUNDED TO SPD GROUND LUG.
3.) UNSHIELDED CAT 6 CABLE MAY BE USED BETWEEN SPD AND CONTROL BOX AND SPD AND ETHERNET SWITCH.
4.) CONTROL BOX AND BATTERY BOX TO BE GROUNDED TO NEAREST EARTH GROUND.
5.) ALL GROUND WIRES IN BATTERY BOX TO BE LANDED ON SAME LUG.
6.) CONTRACTOR TO LEAVE ADEQUATE SERVICE LOOP TO PROVIDE FREE MOVEMENT OF EQUIPMENT CABINET.
7.) ALL RPM EQUIPMENT WITH SUPPLIED POWER CORD(S) ARE TO BE PLUGGED INTO UPS POWER STRIP/PLUG MOLD.
8.) CBP TO PARTITION ETHERNET SWITCH FOR WAN AND LAN CONNECTIONS.

FOR OFFICIAL USE ONLY

ADDENDUM 1 SHEET 1 OF 3
10/21/2016

REQUIREMENTS FOR HANDLING FOUO MATERIAL

1. ONLY SHOW THIS DRAWING TO THOSE INDIVIDUALS WHO HAVE A NEED TO KNOW IN ORDER TO GET THE JOB DONE.
2. WHEN NOT USING THIS DOCUMENT, KEEP IT UNDER LOCK AND KEY, SUCH AS A LOCKED FILE CABINET, LOCKED OFFICE, LOCKED BRIEFCASE, OR OUT OF SIGHT IN A LOCKED VEHICLE.
3. DO NOT MAKE A COPY OF THIS DRAWING WITHOUT PERMISSION FROM ANGELA THOMPSON PHONE: 509–375–2652, EMAIL: angela.thompson@pnl.gov
4. WHEN THE DOCUMENT IS NO LONGER NEEDED RETURN IT TO MAX PHELPS, PNNL, PO BOX 999, K6–66, RICHLAND, WA 99352.

PORT OF TACOMA – PCT STRADDLE CARRIER PORTAL WIRING SCHEMATIC

ISSUE DATE	CROSSING CODE	SCALE
5/2/16	17031	NONE

SIZE	DWG NO	DWG CODE	SHEET NO	SHEETS	REV
F	WS8933		18	23	1

COMMUNICATIONS CABLE SCHEDULE

ID	FROM	TO	CABLE TYPE	CABLE LENGTH	REMARKS
ANN01	CONTROL BOX – LANE 1	MOXA 1 – CCB	ALPHA 35484	35'	NO SUBSTITUTIONS ALLOWED
ANN02	CONTROL BOX – LANE 2	MOXA 2 – CCB	ALPHA 35484	35'	NO SUBSTITUTIONS ALLOWED
ANN03	MOXA 1 – CCB	FIBER PATCH PANEL – CCB	SC–ST FIBER PATCH CABLE	3'	SM DUPLEX (2 REQUIRED)
ANN04	MOXA 2 – CCB	FIBER PATCH PANEL – CCB	SC–ST FIBER PATCH CABLE	3'	SM DUPLEX (2 REQUIRED)
ANN05	CONTROL BOX – LANE 1	ANO – LANE 1	ALPHA 35484	20'	NO SUBSTITUTIONS ALLOWED
ANN06	CONTROL BOX – LANE 2	ANO – LANE 2	ALPHA 35484	20'	NO SUBSTITUTIONS ALLOWED
ANN07	FIBER PATCH PANEL – BOOTH EQUIPMENT RACK	MOXA 3 – BOOTH EQUIPMENT RACK	SC–ST FIBER PATCH CABLE	6'	SM DUPLEX (2 REQUIRED)
ANN08	FIBER PATCH PANEL – BOOTH EQUIPMENT RACK	MOXA 4 – BOOTH EQUIPMENT RACK	SC–ST FIBER PATCH CABLE	6'	SM DUPLEX (2 REQUIRED)
ANN09	MOXA 3 – BOOTH EQUIPMENT RACK	ANI LANE 1 – BOOTH	ALPHA 35484	35'	NO SUBSTITUTIONS ALLOWED
ANN10	MOXA 4 – BOOTH EQUIPMENT RACK	ANI LANE 2 – BOOTH	ALPHA 35484	35'	NO SUBSTITUTIONS ALLOWED
ANN11	FIBER PATCH PANEL – BOOTH EQUIPMENT RACK	MOXA 5 – BOOTH EQUIPMENT RACK	SC–ST FIBER PATCH CABLE	6'	SM DUPLEX (2 REQUIRED)
ANN12	FIBER PATCH PANEL – BOOTH EQUIPMENT RACK	MOXA 6 – BOOTH EQUIPMENT RACK	SC–ST FIBER PATCH CABLE	6'	SM DUPLEX (2 REQUIRED)
ANN13	MOXA 5 – BOOTH EQUIPMENT RACK	EXIT GATE ANI – BOOTH	ALPHA 35484	35'	NO SUBSTITUTIONS ALLOWED
ANN14	MOXA 6 – BOOTH EQUIPMENT RACK	EXIT GATE ANI – BOOTH	ALPHA 35484	35'	NO SUBSTITUTIONS ALLOWED
ANN15	FIBER PATCH PANEL – EXIT GATE BOOTH	MOXA 7 – EXIT GATE BOOTH	SC–ST FIBER PATCH CABLE	6'	SM DUPLEX (2 REQUIRED)
ANN16	FIBER PATCH PANEL – EXIT GATE BOOTH	MOXA 8 – EXIT GATE BOOTH	SC–ST FIBER PATCH CABLE	6'	SM DUPLEX (2 REQUIRED)
ANN17	FIBER PATCH PANEL – EXIT GATE BOOTH	MOXA 9 – EXIT GATE BOOTH	SC–ST FIBER PATCH CABLE	6'	SM DUPLEX (2 REQUIRED)
ANN18	FIBER PATCH PANEL – EXIT GATE BOOTH	MOXA 10 – EXIT GATE BOOTH	SC–ST FIBER PATCH CABLE	6'	SM DUPLEX (2 REQUIRED)
ANN19	MOXA 7 – BOOTH EQUIPMENT RACK	ANI – EXIT GATE BOOTH	ALPHA 35484	35'	NO SUBSTITUTIONS ALLOWED
ANN20	MOXA 8 – BOOTH EQUIPMENT RACK	ANI – EXIT GATE BOOTH	ALPHA 35484	35'	NO SUBSTITUTIONS ALLOWED
ANN21	MOXA 9 – BOOTH EQUIPMENT RACK	ANI LANE 1 – EXIT GATE BOOTH	ALPHA 35484	35'	NO SUBSTITUTIONS ALLOWED
ANN22	MOXA 10 – BOOTH EQUIPMENT RACK	ANI LANE 2 – EXIT GATE BOOTH	ALPHA 35484	35'	NO SUBSTITUTIONS ALLOWED
ASC01	ASC 7	CAT6 PATCH PANEL	PRIMUS C6MXT–2045BK	50'	ALT: HYPERLINE STP4–C6–SOLID–OUTDOOR–40
ASC02	ASC 8	CAT6 PATCH PANEL	PRIMUS C6MXT–2045BK	50'	ALT: HYPERLINE STP4–C6–SOLID–OUTDOOR–40
ASC03	ASC 4	CAT6 PATCH PANEL	PRIMUS C6MXT–2045BK	210'	ALT: HYPERLINE STP4–C6–SOLID–OUTDOOR–40
ASC04	CAT6 PATCH PANEL	ETHERNET SWITCH – BOOTH	CAT6 PATCH CABLE	6'	
ASC05	CAT6 PATCH PANEL	ETHERNET SWITCH – BOOTH	CAT6 PATCH CABLE	6'	
ASC06	CAT6 PATCH PANEL	ETHERNET SWITCH – BOOTH	CAT6 PATCH CABLE	6'	
ASC07	ASC 2	MEDIA CONVERTER – ASC 2 POLE	PRIMUS C6MXT–2045BK	50'	ALT: HYPERLINE STP4–C6–SOLID–OUTDOOR–40
ASC08	ASC 6	MEDIA CONVERTER – ASC 6 POLE	PRIMUS C6MXT–2045BK	50'	ALT: HYPERLINE STP4–C6–SOLID–OUTDOOR–40
ASC09	ASC DVR	HDMI WALL PLATE	HDMI CABLE	35'	WILL REQUIRE DISPLAY PORT TO HDMI ADAPTOR
ASC10	HDMI WALL PLATE	ASC MONITOR	HDMI CABLE	6'	
ASC12	ASC DVR	CAT6 PATCH PANEL	CAT6 PATCH CABLE	6'	USED FOR ASC MOUSE WITH ITEM 530
ASC13	QUADROPLEX DATA PORT	ASC MOUSE	CAT6 PATCH CABLE	6'	USED FOR ASC MOUSE WITH ITEM 530
ASC14	ASC COMPUTER	CAT6 PATCH PANEL	CAT6 PATCH CABLE	6'	USED FOR NETWORK CONNECTION
ASC15	CAT6 PATCH PANEL	ETHERNET SWITCH – BOOTH	CAT6 PATCH CABLE	6'	USED FOR NETWORK CONNECTION
ASC16	ASC 5	MEDIA CONVERTER – ASC 5 POLE	PRIMUS C6MXT–2045BK	50'	ALT: HYPERLINE STP4–C6–SOLID–OUTDOOR–40
ASC17	ASC 1	MEDIA CONVERTER – ASC 1 POLE	PRIMUS C6MXT–2045BK	50'	ALT: HYPERLINE STP4–C6–SOLID–OUTDOOR–40
ASC18	ASC 3	MEDIA CONVERTER – ASC 3 POLE	PRIMUS C6MXT–2045BK	50'	ALT: HYPERLINE STP4–C6–SOLID–OUTDOOR–40
ASC19	MEDIA CONVERTER – ASC 1 POLE	FIBER PATCH PANEL – ASC 1 POLE	SC–LC FIBER PATCH CABLE	6'	SM DUPLEX
ASC20	MEDIA CONVERTER – ASC 3 POLE	FIBER PATCH PANEL – ASC 3 POLE	SC–LC FIBER PATCH CABLE	6'	SM DUPLEX
ASC21	FIBER PATCH PANEL – CCB	MEDIA CONVERTER – ASC 7 LANE 1 CCB	SC–LC FIBER PATCH CABLE	6'	SM DUPLEX
ASC22	FIBER PATCH PANEL – BOOTH	MEDIA CONVERTER – ASC 8 BOOTH EQ CABINET	SC–LC FIBER PATCH CABLE	6'	SM DUPLEX
ASC23	MEDIA CONVERTER – ASC 7 LANE 1 CCB	ETHERNET SWITCH – CCB	CAT6 PATCH CABLE	6'	SM DUPLEX
ASC24	MEDIA CONVERTER – ASC 8 BOOTH EQ CABINET	ETHERNET SWITCH – BOOTH	CAT6 PATCH CABLE	6'	SM DUPLEX
ASC25	MEDIA CONVERTER – ASC 2 POLE	FIBER PATCH PANEL – ASC 2 POLE	SC–LC FIBER PATCH CABLE	6'	SM DUPLEX
ASC26	MEDIA CONVERTER – ASC 6 POLE	FIBER PATCH PANEL – ASC 6 POLE	SC–LC FIBER PATCH CABLE	6'	SM DUPLEX
ASC27	MEDIA CONVERTER – ASC 5 POLE	FIBER PATCH PANEL – ASC 5 POLE	SC–LC FIBER PATCH CABLE	6'	SM DUPLEX
ASC28	ASC COMPUTER	ETHERNET SWITCH – EXIT GATE BOOTH	CAT6 PATCH CABLE	6'	
ASC29	ASC COMPUTER	ASC MONITOR – EXIT GATE BOOTH	HDMI CABLE	35'	
C01	FIBER PATCH PANEL – TRUCK EXIT BOOTH	FIBER PATCH PANEL – STRAD BOOTH	PRIMUS DX024DSLX9KAA2	~4500'	24 STRAND SM DIRECT BURIAL FIBER, VERIFY LIENGTH
C02	FIBER PATCH PANEL – STRAD BOOTH	ETHERNET SWITCH – STRAD BOOTH	SC–LC FIBER PATCH CABLE	6'	SM DUPLEX
C03	FIBER PATCH PANEL – STRAD BOOTH	ETHERNET SWITCH – STRAD BOOTH	SC–LC FIBER PATCH CABLE	6'	SM DUPLEX – USED FOR CBP NETWORK
C04	FIBER PATCH PANEL – TRUCK EXIT BOOTH	ETHERNET SWITCH – TRUCK EXIT BOOTH	SC–LC FIBER PATCH CABLE	6'	SM DUPLEX
C05	ETHERNET SWITCH – STRAD BOOTH	CAT6 PATCH PANEL	CAT6 PATCH CABLE	6'	
C06	ETHERNET SWITCH – STRAD BOOTH	CAT6 PATCH PANEL	CAT6 PATCH CABLE	6'	
C07	ETHERNET SWITCH – STRAD BOOTH	CAT6 PATCH PANEL	CAT6 PATCH CABLE	6'	
C08	FIBER PATCH PANEL – STRAD BOOTH	FIBER PATCH PANEL – CCB LANE 1	PRIMUS DX024DSLX9KAA2	1900'	24 STRAND SM DIRECT BURIAL FIBER
C09	FIBER PATCH PANEL – CCB LANE 1	ETHERNET SWITCH – CCB LANE 1	SC–LC FIBER PATCH CABLE	3'	
C10	CAT6 PATCH PANEL	QUADPLEX DATA PORT	(4) BELDEN 7940A	25'	ALT: BELDEN 7927A OR MOHAWK M58155
C11	CAT6 PATCH PANEL	QUADPLEX DATA PORT	(4) BELDEN 7940A	25'	ALT: BELDEN 7927A OR MOHAWK M58155
C12	CAT6 PATCH PANEL	QUADPLEX DATA PORT	(2) BELDEN 7940A	25'	ALT: BELDEN 7927A OR MOHAWK M58155
C13	QUADPLEX DATA PORT	MONITOR COMPUTER – STRAD BOOTH	CAT6 PATCH CABLE	6'	
C14	QUADPLEX DATA PORT	CBP WORKSTATION – STRAD BOOTH	CAT6 PATCH CABLE	6'	
C15	FIBER PATCH PANEL – CCB LANE 1	FIBER PATCH PANEL – CCB LANE 2	PRIMUS DX024DSLX9KAA2	390'	24 STRAND SM DIRECT BURIAL FIBER
C16	FIBER PATCH PANEL – CCB LANE 2	ETHERNET SWITCH – CCB LANE 2	SC–LC FIBER PATCH CABLE	3'	
C20	FIBER PATCH PANEL – ASC 1 POLE	FIBER PATCH PANEL – CCB LANE 1	PRIMUS DX012DSLX9KAA2	960'	12 STRAND SM DIRECT BURIAL FIBER
C21	FIBER PATCH PANEL – ASC 3 POLE	FIBER PATCH PANEL – BOOTH	PRIMUS DX012DSLX9KAA2	790'	12 STRAND SM DIRECT BURIAL FIBER
C22	FIBER PATCH PANEL – ASC 6 POLE	FIBER PATCH PANEL – CCB LANE 1	PRIMUS DX012DSLX9KAA2	570'	12 STRAND SM DIRECT BURIAL FIBER
C23	FIBER PATCH PANEL – ASC 2 POLE	FIBER PATCH PANEL – CCB LANE 1	PRIMUS DX012DSLX9KAA2	550'	12 STRAND SM DIRECT BURIAL FIBER
C24	FIBER PATCH PANEL – ASC 5 POLE	FIBER PATCH PANEL – CCB LANE 1	PRIMUS DX012DSLX9KAA2	550'	12 STRAND SM DIRECT BURIAL FIBER
DET01	CONTROL BOX 1	LANE 1 RSP 1	ALPHA 35484	75'	NO SUBSTITUTIONS ALLOWED
DET02	CONTROL BOX 1	LANE 1 RSP 2	ALPHA 35484	35'	NO SUBSTITUTIONS ALLOWED
DET03	LANE 1 RSP 1	LANE 1 RSP 3	ALPHA 35484	15'	NO SUBSTITUTIONS ALLOWED
DET04	LANE 1 RSP 2	LANE 1 RSP 4	ALPHA 35484	15'	NO SUBSTITUTIONS ALLOWED
DET05	LANE 1 RSP 3	LANE 1 RSP 5	ALPHA 35484	20'	NO SUBSTITUTIONS ALLOWED
DET06	LANE 1 RSP 4	LANE 1 RSP 6	ALPHA 35484	20'	NO SUBSTITUTIONS ALLOWED
DET07	LANE 1 RSP 5	LANE 1 RSP 7	ALPHA 35484	15'	NO SUBSTITUTIONS ALLOWED
DET08	LANE 1 RSP 6	LANE 1 RSP 8	ALPHA 35484	15'	NO SUBSTITUTIONS ALLOWED
DET09	LANE 1 RSP 7	LANE 1 RSP 9	ALPHA 35484	20'	NO SUBSTITUTIONS ALLOWED
DET10	LANE 1 RSP 8	LANE 1 RSP 10	ALPHA 35484	20'	NO SUBSTITUTIONS ALLOWED
DET11	LANE 1 RSP 9	LANE 1 RSP 11	ALPHA 35484	15'	NO SUBSTITUTIONS ALLOWED
DET12	LANE 1 RSP 10	LANE 1 RSP 12	ALPHA 35484	15'	NO SUBSTITUTIONS ALLOWED
DET13	LANE 1 RSP 11	LANE 1 RSP 13	ALPHA 35484	100'	NO SUBSTITUTIONS ALLOWED
DET14	LANE 1 RSP 12	LANE 1 RSP 14	ALPHA 35484	100'	NO SUBSTITUTIONS ALLOWED
DET15	LANE 1 RSP 13	LANE 1 RSP 15	ALPHA 35484	20'	NO SUBSTITUTIONS ALLOWED
DET16	CONTROL BOX 2	LANE 2 RSP 1	ALPHA 35484	75'	NO SUBSTITUTIONS ALLOWED
DET17	CONTROL BOX 2	LANE 2 RSP 2	ALPHA 35484	35'	NO SUBSTITUTIONS ALLOWED
DET18	LANE 2 RSP 1	LANE 2 RSP 3	ALPHA 35484	15'	NO SUBSTITUTIONS ALLOWED
DET19	LANE 2 RSP 2	LANE 2 RSP 4	ALPHA 35484	15'	NO SUBSTITUTIONS ALLOWED
DET20	LANE 2 RSP 3	LANE 2 RSP 5	ALPHA 35484	20'	NO SUBSTITUTIONS ALLOWED
DET21	LANE 2 RSP 4	LANE 2 RSP 6	ALPHA 35484	20'	NO SUBSTITUTIONS ALLOWED
DET22	LANE 2 RSP 5	LANE 2 RSP 7	ALPHA 35484	15'	NO SUBSTITUTIONS ALLOWED
DET23	LANE 2 RSP 6	LANE 2 RSP 8	ALPHA 35484	15'	NO SUBSTITUTIONS ALLOWED
DET24	LANE 2 RSP 7	LANE 2 RSP 9	ALPHA 35484	20'	NO SUBSTITUTIONS ALLOWED
DET25	LANE 2 RSP 8	LANE 2 RSP 10	ALPHA 35484	20'	NO SUBSTITUTIONS ALLOWED
DET26	LANE 2 RSP 9	LANE 2 RSP 11	ALPHA 35484	15'	NO SUBSTITUTIONS ALLOWED
DET27	LANE 2 RSP 10	LANE 2 RSP 12	ALPHA 35484	15'	NO SUBSTITUTIONS ALLOWED
DET28	LANE 2 RSP 11	LANE 2 RSP 13	ALPHA 35484	100'	NO SUBSTITUTIONS ALLOWED
DET29	LANE 2 RSP 12	LANE 2 RSP 14	ALPHA 35484	100'	NO SUBSTITUTIONS ALLOWED
DET30	LANE 2 RSP 13	LANE 2 RSP 15	ALPHA 35484	20'	NO SUBSTITUTIONS ALLOWED
GL1	PLC – EQUIPMENT BANK LANE 1	LANE 1 UPSTREAM GATE LOOP	ALPHA 35484	60'	ALPHA 35110
GL2	PLC – EQUIPMENT BANK LANE 1	LANE 1 DOWNSTREAM GATE LOOP	ALPHA 35484	75'	ALPHA 35110
GL3	PLC – EQUIPMENT BANK LANE 1	LANE 2 UPSTREAM GATE LOOP	ALPHA 35484	420'	ALPHA 35110
GL4	PLC – EQUIPMENT BANK LANE 1	LANE 2 DOWNSTREAM GATE LOOP	ALPHA 35484	430'	ALPHA 35110
HMI1	HMI	QUADPLEX DATA PORT	CAT6 PATCH CABLE	25'	
PLC01	CONTROL BOX – LANE 1	PLC – EQUIPMENT BANK LANE 1	ALPHA 35110	30'	ALT: ALPHA 35485/35199/35125
PLC02	CONTROL BOX – LANE 2	PLC – EQUIPMENT BANK LANE 1	ALPHA 35110	370'	ALT: ALPHA 35485/35199/35125
PLC03	PLC – EQUIPMENT BANK LANE 1	ETHERNET SWITCH – CCB	PRIMUS C6MXT–2045BK	10'	ALT: HYPERLINE STP4–C6–SOLID–OUTDOOR–40
RPM1	CONTROL BOX – LANE 1	ETHERNET SWITCH – CCB	PRIMUS C6MXT–2045BK	30'	ALT: HYPERLINE STP4–C6–SOLID–OUTDOOR–40
RPM2	CONTROL BOX – LANE 2	ETHERNET SWITCH – CCB	PRIMUS C6MXT–2045BK	370'	ALT: HYPERLINE STP4–C6–SOLID–OUTDOOR–40
SOH1	CONTROL BOX – LANE 1	BATTERY BOX – LANE 1	(1) 6–CONDUCTOR FLAT CABLE	6'	RJ–12 CONNECTOR
SOH2	CONTROL BOX – LANE 2	BATTERY BOX – LANE 2	(1) 6–CONDUCTOR FLAT CABLE	6'	RJ–12 CONNECTOR
T01	VIS RELAYS LANE 1	RSP 1 – LANE 1	ALPHA 35372	50'	
T02	VIS RELAYS LANE 1	FRONT VIS CAMERA – LANE 1	ALPHA 35372	75'	
T03	VIS RELAYS LANE 1	SIDE VIS CAMERA – LANE 1	ALPHA 35372	100'	
T04	VIS RELAYS LANE 1	REAR VIS CAMERA – LANE 1	ALPHA 35372	125'	
T05	VIS RELAYS LANE 2	RSP 1 – LANE 2	ALPHA 35372	50'	
T06	VIS RELAYS LANE 2	FRONT VIS CAMERA – LANE 2	ALPHA 35372	75'	
T07	VIS RELAYS LANE 2	SIDE VIS CAMERA – LANE 2	ALPHA 35372	100'	
T08	VIS RELAYS LANE 2	REAR VIS CAMERA – LANE 2	ALPHA 35372	125'	
TEL1	TELCO DEMARCATION – BOOTH	CAT6 PATCH PANEL	CAT6 ROHS	25'	
TEL2	TELCO DEMARCATION – BOOTH	CAT6 PATCH PANEL	CAT6 ROHS	25'	
TEL3	QUADPLEX DATA PORT	TELEPHONE	CAT3 ROHS	15'	
TEL4	QUADPLEX DATA PORT	FAX	CAT3 ROHS	15'	
VIS1	VIS J–BOX, LANE 1 FRONT	ETHERNET SWITCH – CCB	PRIMUS C6MXT–2035BK	75'	ALT: HYPERLINE STP4–C6–SOLID–OUTDOOR–40
VIS2	VIS J–BOX, LANE 1 SIDE	ETHERNET SWITCH – CCB	PRIMUS C6MXT–2035BK	100'	ALT: HYPERLINE STP4–C6–SOLID–OUTDOOR–40
VIS3	VIS J–BOX, LANE 1 REAR	ETHERNET SWITCH – CCB	PRIMUS C6MXT–2035BK	125'	ALT: HYPERLINE STP4–C6–SOLID–OUTDOOR–40
VIS4	VIS J–BOX, LANE 2 FRONT	ETHERNET SWITCH – CCB	PRIMUS C6MXT–2035BK	175'	ALT: HYPERLINE STP4–C6–SOLID–OUTDOOR–40
VIS5	VIS J–BOX, LANE 2 SIDE	ETHERNET SWITCH – CCB	PRIMUS C6MXT–2035BK	200'	ALT: HYPERLINE STP4–C6–SOLID–OUTDOOR–40
VIS6	VIS J–BOX, LANE 2 REAR	ETHERNET SWITCH – CCB	PRIMUS C6MXT–2035BK	225'	ALT: HYPERLINE STP4–C6–SOLID–OUTDOOR–40
ANN23	FIBER PATCH PANEL – BOOTH EQUIPMENT RACK	MOXA 11 – BOOTH EQUIPMENT RACK	SC–ST FIBER PATCH CABLE	6'	SM DUPLEX (2 REQUIRED)
ANN24	FIBER PATCH PANEL – BOOTH EQUIPMENT RACK	MOXA 12 – BOOTH EQUIPMENT RACK	SC–ST FIBER PATCH CABLE	6'	SM DUPLEX (2 REQUIRED)
ANN25	MOXA 11 – BOOTH EQUIPMENT RACK	ANI LANE 1 – BOOTH	ALPHA 35484	35'	NO SUBSTITUTIONS ALLOWED
ANN26	MOXA 12 – BOOTH EQUIPMENT RACK	ANI LANE 2 – BOOTH	ALPHA 35484	35'	NO SUBSTITUTIONS ALLOWED

ADDENDUM 1
10/21/2016

SHEET 2 OF 3

PORT OF TACOMA – PCT
STRADDLE CARRIER PORTAL
COMMS CABLE SCHEDULE

ISSUE DATE	CROSSING CODE	SCALE
5/2/16	17031	NONE

SIZE	DWG NO	DWG CODE	SHEET NO	SHEETS	REV
F	WS8933		19	23	1

EQUIPMENT SCHEDULE

ID #	QTY	PART NAME	MANUFACTURER	PART NUMBER	PROVIDED BY	INSTALLED BY	REMARKS
100-RPM EQUIPMENT							
100	30	CARGO RPM RSP WITH SHROUD	LEIDOS	DET 21815-2 (N1)	SCP	CI	INCLUDED IN STRAD PORTAL
140	6	INTERIOR ALARM ANNUNCIATOR	LEIDOS	ANI 21771-1	RPMP	CI	
141	2	EXTERIOR ALARM ANNUNCIATOR	LEIDOS	ANE 21770-1	RPMP	CI	
160	2	CONTROL BOX	LEIDOS	CB 21920-1	SCP	CI	INCLUDED IN STRAD PORTAL
161	2	BATTERY BOX	LEIDOS	UPS 21921-1	SCP	CI	INCLUDED IN STRAD PORTAL
170	5	VEHICLE PRESENCE SENSOR KIT	BANNER	Q456EQ5 / Q45BB6RQ5	SCP	CI	INCLUDED IN STRAD PORTAL
172	1	VPS MOUNTING HARDWARE	VARIOUS	N/A	SCP	CI	INCLUDED IN STRAD PORTAL
	**ITEMS NEEDED TO MOUNT VEHICLE PRESENCE SENSORS IN ONE LANE (2 STANDS)						
	12	1/4-20UNC HEX BOLT (1-1/4 INCH LENGTH)	HEX BOLT	STAINLESS STEEL			
	12	1/4-20UNC HEX NUT	HEX NUT	STAINLESS STEEL			
	12	1/4 INCH LOCK WASHER	LOCK WASHER	STAINLESS STEEL			
	24	1/4 INCH FLAT WASHER	FLAT WASHER	STAINLESS STEEL			
173	2	VPS UNISTRUT (10ft SECTION)	UNISTRUT	P7000SS	SCP	CI	INCLUDED IN STRAD PORTAL
300-COMPUTER AND IP-NETWORK EQUIPMENT							
301	1	MONITOR COMPUTER			RPMP	CI	SPECIFIC MODELS MAY VARY
	**ITEMS NEEDED FOR EACH MONITOR COMPUTER						
	1	MONITOR COMPUTER	DELL	9020TM			
	1	FLAT-SCREEN MONITOR W / INTEGRATED SPEAKER	DELL	P1914S			
	1	PRINTER, COLOR INKJET	HP	OFFICEJET 6230			
	1	CABLE, USB, FOR PRINTER	VARIES	VARIES			
302	1	WORKSTATION COMPUTER			OIT	OIT	REIMBURSIBLE AGREEMENT WITH FACILITY OWNER / OPERATOR
	**ITEMS NEEDED FOR EACH WORKSTATION COMPUTER						
	1	WORKSTATION COMPUTER	OIT SPECIFIED SYSTEM COMPONENTS				
	1	FLAT-SCREEN MONITOR W / INTEGRATED SPEAKER					
	1	ALL-IN-ONE PRINTER / FAX / COPIER					
	1	PRINTER, COLOR INKJET					
	1	CABLE, USB, FOR PRINTER					
327	1	ETHERNET SWITCH - 24 PORT	CISCO SYSTEMS, INC	CATALYST 3750X-24P-S	OIT	OIT	REIMBURSIBLE AGREEMENT WITH FACILITY OWNER / OPERATOR
329	2	HARDENED ETHERNET SWITCH	CISCO SYSTEMS, INC	IE-3000-8TC + PWR-IE3000-AC	SCP	OIT	INCLUDED WITH STRAD PORTAL. NEEDS TO BE CONFIGURED BY OIT
330	1	EXPANSION MODULE FOR IE3000 W/PS	CISCO SYSTEMS, INC	IEM-3000-8TM	SCP	OIT	INCLUDED WITH STRAD PORTAL. NEEDS TO BE CONFIGURED BY OIT
333	4	SFP FOR SM FIBER (LC CONNECTOR)	CISCO SYSTEMS, INC	GLC-ZX-SM	OIT	OIT	REIMBURSIBLE AGREEMENT WITH FACILITY OWNER / OPERATOR
334	2	SFP FOR SM FIBER - RUGGIDIZED (LC CONNECTOR)	CISCO SYSTEMS, INC	GLC-ZX-SM-RGD	OIT	OIT	REIMBURSIBLE AGREEMENT WITH FACILITY OWNER / OPERATOR
337	1	CAT6 PATCH PANEL W / REQUIRED CONNECTORS	PANDUIT	DP24688TGY	CP	CI	
338	10	WALL MOUNTED FIBER PATCH PANEL W / REQUIRED CONNECTORS	PANDUIT	FWME4 + (4) FAP6WBUDSC	CP/SCP	CI	ONE PATCH PANEL WILL BE INCLUDED WITH THE STRAD PORTAL (SCP PROVIDED)
339	1	RACK MOUNTED FIBER PATCH PANEL W / REQUIRED CONNECTORS	PANDUIT	FCE1U + (4) FAP6WBUDSC	CP	CI	
340	4	IP MEDIA CONVERTER	ANTAIRA		CP	CI	REQUIRES 24VDC POWER SUPPLY (ID# 345, 545, OR OTHER). EACH MEDIA CONVERTER CONSUMES 528W POWER
	**ITEMS NEEDED FOR EACH IP MEDIA CONVERTER						
	1	MEDIA CONVERTER	ANTAIRA	IMC-1000A-SFP			
	1	SFP MODULE - SINGLE MODE, LC	ANTAIRA	SFP-S10-T			
342	12	MOXA - ANNUNCIATOR TO SINGLE-MODE FIBER MEDIA CONVERTER			CP	CI	REQUIRES 24VDC POWER SUPPLY (ID# 345, 545, OR OTHER)
	**ITEMS NEEDED FOR EACH ANNUNCIATOR MOXA MEDIA CONVERTER						
	1	MEDIA CONVERTER 485 - SINGLE MODE	MOXA	TCF-142-S-SC-T			
	1	FIBER PATCH CABLE, SC-SC	CONTRACTOR SPECIFIED				
345	4	24VDC POWER SUPPLY	ALTRONIX	R1224DC16CB	CP	CI	24VDC PWR FOR 16 DEVICES
346	4	24VDC POWER SUPPLY FOR IP MEDIA CONVERTER	ANTAIRA	MDR-10	CP	CI	FOR USE WITH ANTAIRA MEDIA CONVERTER
393	6	SURGE SUPRESSOR	LINX	CAT6-LAN	CP	CI	TO BE INSTALLED ON BOTH ENDS OF ALL CAT6 CABLES TERMINATING OUDOORS.
400-PLC AND TRAFFIC CONTROL EQUIPMENT							
411	1	3-LANE OUTDOOR WALL MOUNT PLC	PNNL		RPMP	CI	
	**ITEMS NEEDED FOR EACH PLC ASSEMBLY						
	1	PLC BASE KIT	NEWARK	68Y4848			
	2	PLC EXPANSION KIT	NEWARK	68Y4849			
424	2	RED BEACON WITH HORN	EDWARDS SIGNALING	51XBRFR24D	CP	CI	
425	2	AMBER BEACON WITH HORN	EDWARDS SIGNALING	51XBRFA24D	CP	CI	
426	2	8" RED / GREEN TRAFFIC LIGHT ASSEMBLY			CP	CI	
	**ITEMS NEEDED FOR EACH 8 inch RED / GREEN TRAFFIC LIGHT ASSEMBLY						
	1	8" RED LED SIGNAL MODULE	INDUSTRIAL TRAFFIC SOLUTIONS	6843			
	1	8" GREEN LED SIGNAL MODULE	INDUSTRIAL TRAFFIC SOLUTIONS	6845			
	2	8" BLACK, NEMA 4 HOUSING	INDUSTRIAL TRAFFIC SOLUTIONS	CH-8			
	1	MOUNTING HARDWARE	INDUSTRIAL TRAFFIC SOLUTIONS	2079			
	1	STAINLESS STEEL BOLTING KIT	INDUSTRIAL TRAFFIC SOLUTIONS	1071			
464	1	DESK TOP HUMAN MACHINE INTERFACE UNIT	HILINE ENGINEER	162-H2	RPMP	CI	SEAPORT
472	4	GROUND LOOP	PATRIOT DETECTION	CG9.5MM	CP	CI	ORDER TO DIMENSIONS SPECIFIED IN DRAWINGS
473	4	GROUND LOOP CONTROLLER	RENO A&E	BX-4	CP	CI	GOES WITH GROUND LOOP

500-MONITORING EQUIPMENT							
500	3	AREA SURVEILLANCE CAMAERA - FIXED			CP	CI	
	**ITEMS NEEDED FOR EACH PTZ ASC						
	1	PAN-TILT-ZOOM CAMERA W/LENS AND ENCLOSURE	HONEYWELL	HD4HDIH			
	1	WALL MOUNT	HONEYWELL	HD4CHIP-WK			
	1	POLE MOUNT ADAPTER	HONEYWELL	HDXPMA2			
501	4	AREA SURVEILLANCE CAMAERA - PTZ			CP	CI	
	**ITEMS NEEDED FOR EACH PTZ ASC						
	1	PAN-TILT-ZOOM CAMERA W/LENS AND ENCLOSURE	HONEYWELL	HDZ30HDE			
	1	WALL MOUNT	HONEYWELL	HDXWM2			
	1	POLE MOUNT ADAPTER	HONEYWELL	HDXPMA2			
509	1	AREA SURVEILLANCE DVR	HONEYWELL	HHSE32C1662T	CP	CI	
511	1	AREA SURVEILLANCE COMPUTER	DELL	PRECISION T1700	CP	CI	SPECS: CPU - INTEL i5 3.0 GHz OR BETTER RAM - 8 GB RAM (DDR3 OR BETTER) MINIMUM HARD DRIVE - 250-500 GB MIN VIDEO CARD - DEDICATED DIRECTX11 COMPATIBLE WITH 1GB RAM OR MORE NETWORK CARD - 1GB WIRED NETWORK INTERFACE CARD OPTICAL DRIVE - DVD =/- RW DRIVE CASE STYLE - SMALL FORM FACTOR PREFERRED
512	2	AREA SURVEILLANCE MONITOR	BENQ	XL2430T	CP	CI	
513	4	OUTDOOR POWER SUPPLY FOR ASC	HONEYWELL	HPTV2401WPZ	CP	CI	24VAC PWR FOR ONE ASC
514	1	24VAC POWER SUPPLY	ALTRONIX	R2416ULCB	CP/SCP	CI	24VAC PWR FOR 16 DEVICES (1 INLCLUDED WITH STRAD PORTAL)
515	1	USB ETHERNET EXTENDER	LOGEAR	GUCE51	CP	CI	CAN BE SUBSTITUTED WITH LIKE ITEM
540	2	VIS SIDE CAMERA ASSEMBLY			SCP	CI	WIDE ANGLE LENSE
	**ITEMS NEEDED FOR EACH VIS SIDE CAMERA ASSEMBLY						
	1	VIS CAMERA	VICON	IQ862WE-W2			
	1	MOUNT ASSEMBLY	VICON	IQA-CNR			
541	4	VIS FRONT/REAR CAMERA ASSEMBLY			SCP	CI	VARIABLE LENSE
	**ITEMS NEEDED FOR EACH VIS FRONT/REAR CAMERA ASSEMBLY						
	1	VIS CAMERA	VICON	IQ862WE-V17			
	1	MOUNT ASSEMBLY	VICON	IQA-CNR			
542	2	LED VIS LIGHT - 78W	RAB	FXLED78TN	SCP	CI	
543	4	LED VIS LIGHT - 150W	RAB	FXLED150TN	SCP	CI	
545	4	VIS CAMERA RELAY	PHOENIX CONTACT	2967060	SCP	CI	
546	1	OCR SOFTWARE LICENSE	HI-TECH SOLUTIONS		SCP	CI	
547	6	POE INJECTOR	RED LION	1000-POE+	SCP	CI	
600-BOOTH FURNISHINGS							
603	1	BOOTH 10' X 24' - LEFT HAND	PORTA-KING	BR2410 UL 752-LEVEL 3 (LEFT HAND)	EXST	EXST	
611	3	QUADPLEX DATA PORT	CONTRACTOR SPECIFIED	CONTRACTOR SPECIFIED	CP	CI	
612	1	WALL MOUNTED VIDEO PORT	CONTRACTOR SPECIFIED	CONTRACTOR SPECIFIED	CP	CI	USED FOR ASC MONITOR
624	1	FILE CABINET W/LOCK, 4 DRAWERS (52IN H X 15INW X 25IN D), BLACK	HON	HON514NP	CP	CI	
625	1	FILE CABINET W/LOCK, 2 DRAWERS (29IN H x15IN W x25IN D), BLACK	HON	HON512PP	CP	CI	
626	1	MOBILE PEDESTAL (BOX/BOX/FILE) 1600 SERIES	HON	1623P	CP	CI	
627	1	WALL CLOCK (10"), SELF ADJUSTING FOR DALIGHT SAVINGS TIME	STAPLES	SET2628	CP	CI	
628	1	WASTEBASKET	ELDON	BLACK POLYETHELENE, 7 GALLON	CP	CI	
629	1	OFFICE POWER STRIP - 6 OUTLET	POWER SENTRY	100112 - 6 OUTLET	CP	CI	6-OUTLET WALL-MOUNT/DESKTOP POWER STRIP
630	1	MULTI-LINE TELEPHONE, SPEAKERPHONE	PANASONIC	PANKXTSC14W, PANKXTSC14B	CP	CI	
631	1	LIGHT, CLIP ON DESK, 35W HALOGEN	LITE SOURCE	LS-165PS	CP	CI	
632	1	PRINTER STAND (8.5" X 18.5" X 12")	STAPLES	32989-US	CP	CI	
633	4	TASK CHAIR	BIG & TALL	OFM 700 NAVY	CP	CI	
634	2	DESK - (60LX24DX29.5H) - CHARCOAL	MAXON	WR6024T	CP	CI	
635	2	DESK - 3' 4" CONRNER SECTION (GRAY)	BUSH	BSHWC90466A	CP	CI	
636	1	DESK - 5' SECTION (GRAY)	BUSH	BSHWC90460A	CP	CI	
640	1	REFRIGERATOR	MAGIC CHEF	HMBR-44BE	CP	CI	
641	1	MICROWAVE	MAGIC CHEF	MCM-991B	CP	CI	
652	2	MOBILE CPU STAND, CPUS 4IN TO 9IN WIDE	RUBBERMAID	RUB-62413	CP	CI	
683	1	EQUIPMENT RACK - FULL HEIGHT			OIT	OIT	RECOMMENDED OIT CABINET; REIMBURSIBLE AGREEMENT WITH FACILITY OWNER / OPERATOR. COORDINATE INSTALLATION OF HARDWARE IN EQUIPMENT RACK WITH LOCAL OIT.
	**ITEMS NEEDED FOR EACH EQUIPMENT RACK ASSEMBLY - FULL HEIGHT						
	1	INDOOR EQUIPMENT RACK/CABINET	DELL	POWER EDGE 4220			
	3	RACK TRAYS					
690	1	60 AMP GENERATOR PLUG WITH CAP	HUBBELL	HBL36W & PC60	EXST	EXST	
691	1	GENERATOR PLUG BOX AND CAP	HUBBELL	BB601W & PC60	EXST	EXST	
692	1	MANUAL TRANSFER SWITCH			EXST	EXST	
693	1	MAIN ELECTRICAL DISCONNECT, 200A, 120/240V			EXST	EXST	

UNCLASSIFIED

ADDENDUM 1 SHEET 3 OF 3
10/21/2016

PORT OF TACOMA - PCT
STRADDLE CARRIER PORTAL
EQUIPMENT SCHEDULE

ISSUE DATE	CROSSING CODE	SCALE
5/2/16	17031	NONE

SIZE	DWG NO	DWG CODE	SHEET NO	SHEETS	REV
F	WS8933		22	23	1

RPM8

Radiation Portal Monitor System

Installation Manual

Revision 1.1, March 08, 2007

Part Number: 36099-1

SAIC® From Science to Solutions

Exploranium
A Division of SAIC Canada

LIMITED RIGHTS NOTICE

These data are submitted with limited rights under Government Contract Number 8336. These data may be reproduced and used by the Government with the express limitation that they will not, without written permission of the contractor, be used for purposes of manufacture nor disclosed outside the Government; except that the Government may disclose these data outside the Government for the following purposes, if any; provided that the Government makes such disclosure subject to prohibition against further use and disclosure. This Notice shall be marked on any reproduction of these data, in whole or in part.

Revision History

Revision	Date	ECO #	Description
Rev 1.0	Feb 21 - 06	-	Initial release
Rev 1.1	Mar 08 - 07	AT980/0270	Correct Figures 3-7 and 3-8 and paras 5 to 12 of Section 3.2 to suit. Update Manual to reflect changes made to the Eng Dwgs PN 21350 and 21352 – Stand installation.

Safety Warnings and Symbol Explanation

WARNING: *DISCONNECT SUPPLY BEFORE SERVICING*

WARNING: *Replace with Battery Type A512/40G6.* To prevent explosions and possible serious injury, the battery must be replaced by the same model and type. The recommended manufacturer and type is Sonnenschein dryfit A500 series type A512/40G6.

When opening the cabinet there is a risk of electrical shock. Input voltage is at 120V AC. The Battery Box assembly has incoming power of 120V AC. Disconnect the power before servicing.

This symbol represents the incoming earth ground of the main power supply. Follow proper grounding instructions in this manual to ensure proper equipment safety.

Manufactured by SAIC Exploranium, 6108 Edwards Blvd, Mississauga, Ontario, Canada, L5T 2V7

Table of Contents

1.0 Introduction 1

1.1 Purpose and Scope 1
1.2 Supporting Documents 1
1.3 System Overview 2
1.4 System Description 3
1.5 Installation Logistics 8
1.5.1 Site Preparation 8
1.5.2 Installation Sequence 9
1.5.3 Recommended Transport and Storage – Support Stands 10

2.0 System Installation 11

2.1 RPM Configuration 11
2.1.1 POV Configuration 11
2.1.2 Truck/Cargo Configuration 12
2.2 Installing Components and Hardware 14
2.3 Component Installation 18
2.3.1 Type 1 Support Stand Installation 19
2.3.2 Type 2/3 Support Stand Installation 25
2.3.3 Vehicle Presence Sensors (VPS) Installation 30
2.3.4 Conduit Installation 33
2.3.4.1 Install the conduit supporting Unistrut 33
2.3.4.2 Install Conduit (for POV and/or Truck/Cargo Configuration) 33
2.3.4.3 POV Configuration – Conduit Installation 34
2.3.4.4 Truck/Cargo Configuration – Conduit Installation 36
2.3.5 Control Box (CB), Battery Box, and Exterior Annunciator (ANE) Installation 39
2.3.5.1 Vertical Unistrut Installation 39
2.3.5.2 Battery Box Installation 40
2.3.5.3 Control Box (CB) Installation 40
2.3.5.4 Exterior Annunciator (ANE) Installation 42
2.3.6 Ground loop Installation 42
2.3.7 Traffic Light Controller (TLC) Installation 42
2.3.8 Annunciator Installation 43
2.3.8.1 Install ANE in a Different Location: 43
2.3.9 Alignment Procedure for the VPS 45
2.3.9.1 VPS Initial Alignment 45
2.3.9.2 VPS Final Alignment 45

3.0 System Wiring 47

3.1 RPM8 System Interconnection 47
3.1.1 Equations for Determining Maximum Cabling Runs For RPMs 56
3.1.1.1 Single device 56
3.1.1.2 Multiple Devices 56
3.1.1.3 Wiring Strings 58
3.1.2 Cabling 58
3.1.2.1 Communication (Supervisory Computer (SC), Monitor Computer (MC) - Ethernet Conduit (CAT 5e) 58
3.1.2.2 Communication Cable (RS-485) - RSP 59
3.1.2.3 Communication Cable (RS-485) – Interior Annunciator (ANN8 and/or ANI) 59
3.1.2.4 Communication Cable (RS-485) – Exterior Annunciator (ANE) 59

3.2 Connecting the RSPs and Setting DIP Switches 60
3.3 Connecting the Control Box (CB) 66
3.4 Connecting the Interior and Exterior Annunciators (ANI/ANE) 73
3.5 Connecting the Battery Box 74
3.6 Connecting the Ground Loop (Supplied by Others) 76
3.7 Connecting the Traffic Light Controller (TLC) (Supplied by Others) 76
3.8 Installing the Annunciator Assembly 77
3.8.1 Wiring the Terminal Blocks 77
3.8.2 Annunciator Interior/Exterior Installation 77
3.8.2.1 ANI Installation 80
3.8.2.2 ANE (Optional) Installation 83
3.8.2.3 Replace the Acknowledge Button with Key Switch (Optional) 84
3.9 Connecting the Supervisory Computer 85
3.10 Connecting the Monitor Computers 86

Appendix A System Specifications 87

A.1 Electrical Specifications 87
A.2 Operating Conditions 87
A.3 Fuse Types 88
A.4 RPM Support Stand Dimensions 89
A-5 Engineering Drawings 91

Appendix B Site Preparation for Support Stand Installation 92

Appendix C Touching Up Painted Surfaces 93

Appendix D Pre-Start - Installation Checklist 94

Appendix E Installation Checklist 95

Appendix F Wire Tables 97

List of Figures

Figure 1-1 RSP Configuration – Multiple Vehicle Lanes 2
Figure 1-2 Type 1 and Type 2/3 Support Stands 3
Figure 1-3 Environmental Enclosure 4
Figure 1-4 Control Box 5
Figure 1-5 Vehicle Presence Sensor (VPS) 5
Figure 1-6 Interior Annunciator Assembly 5
Figure 1-7 Exterior Annunciator Assembly 6
Figure 1-8 Battery Box 7
Figure 2-1 POV Site Layout 12
Figure 2-2 Truck/Cargo Site Layout 13
Figure 2-3 Type 1 Footing Template 19
Figure 2-4 Type 1 DTI Installation for Support Stand Foot 20
Figure 2-5 Type 1 Support Stand Installation 22
Figure 2-6 Type 1 DTI Installation for Splice Plate 23
Figure 2-7 Type 1 Support Stand Combination Installation 24
Figure 2-8 Type 2/3 Footing Template 25
Figure 2-9 Type 2/3 Support Stand Installation 27
Figure 2-10 Type 2/3 DTI Installation 28
Figure 2-11 Type 2/3 Support Stand Combination Installation 29
Figure 2-12 Unistrut/VPS (Optical Sensor) Installation 30
Figure 2-13 Sensor Mounting Positions 32
Figure 2-14 Conduit Installation (Unistrut and Clamp) 35

Figure 2-15 Conduit Installation (RSP 1/3 Truck/Cargo and RSP 1 POV Config.) 37
Figure 2-16 Conduit Installation (RSP 2/4 Truck/Cargo and RSP 2 POV Config.) 38
Figure 2-17 Component Installation (Mounting Dimensions) 39
Figure 2-18 Control Box, Battery Box and Exterior Annunciator Installation 41
Figure 2-19 Annunciator Mounting Bar Dimensions 42
Figure 2-20 Interior Annunciator Mounting Hole Pattern 43
Figure 2-21 Exterior Annunciator Bolt Pattern 44
Figure 2-22 VPS Alignment Diagram 46
Figure 3-1 RPM8 System Interconnection Diagram (Two RSP System) 47
Figure 3-2 RPM8 System Interconnection Diagram (Four RSP System) 48
Figure 3-3 RPM8 System Interconnection Diagram (Eight RSP System) 49
Figure 3-4 RSP Component Layout 60
Figure 3-5 RFI Filter Assembly Kit 61
Figure 3-6 RFI Filter Assembly Installation Diagram 61
Figure 3-7 EVEN RSP Connection Diagram 63
Figure 3-8 ODD RSP Connection Diagram 64
Figure 3-9 RSP DIP Switch Addresses 65
Figure 3-10 Control Box Component Diagram 66
Figure 3-11 Control Box Interconnect Diagram 67
Figure 3-12 CB Internal Cable Connections 68
Figure 3-13 CB Display Panel Connections 69
Figure 3-14 CB External Cable Connections 70
Figure 3-15 RSP to CB Connections 71
Figure 3-16 CBI TRM CCA Connections 72
Figure 3-17 ANI/ANE to CB Cable Connections 73
Figure 3-18 Battery Box Component Connections 74
Figure 3-19 BAT-VTT Connections 75
Figure 3-20 ANI/ANE RS-485 Cable Diagram 77
Figure 3-21 ANI/ANE CCA Diagram 78
Figure 3-22 ANI/ANE Multiple Annunciator Diagram 79
Figure 3-23 ANI Grommet Assembly 80
Figure 3-24 Annunciator (ANI/ANE) DIP Switch Settings 82
Figure 3-25 Exterior Annunciator (ANE) Assembly 83
Figure 3-26 Network Interconnect Diagram 86

List of Tables

Table 2-1 – Hardware Supplied by SAIC Exploranium 14
Table 2-2 – Hardware NOT Supplied by SAIC Exploranium 15
Table 2-3 – Conduit List 33
Table 3-1 – Cable List (Major System Component Connections) 50
Table 3-2– Control Box Cable List 71
Table 3-3 – Battery Box Cable List 76
Table F-1 – Cable Wiring for RSPs (See Figure 3-15) 97
Table F-2 – Cable Wiring for Annunciators (See Figure 3-20) 97

1.0 Introduction

1.1 Purpose and Scope

The Radiation Portal Monitor (RPM8) is a system for detecting illicit movement of radioactive materials.

The radioactive materials of interest at U.S. borders include Special Nuclear Materials (SNM) such as Plutonium (Pu) and Highly Enriched Uranium (HEU) that could be used in a nuclear device. Also of interest are a wide variety of radionuclides that might be used in a Radiation Dispersal Device (RDD), for example ^{60}Co, ^{90}Sr/^{90}Y, ^{127}Cs, or spent reactor fuel.

The purpose of primary screening with the RPM8 is rapid detection, as opposed to identification or quantification, of radioactive materials. The RPM8 can also be used in secondary screening to verify the existence of radioactive materials and to help locate the material within the vehicle or container. While primary screening is made as sensitive as possible to containers with elevated radioactivity levels, non-radioactive cargo can pass quickly so that the impact on the flow of commerce is minimized.

This manual has been developed to support the construction and commissioning of the RPM8 Radiation Portal Monitor System (with a Multiple Annunciator(s) – ANI & ANE).

1.2 Supporting Documents

This manual has been compiled from information provided by the engineering drawings listed in Appendix A.5 and also drawings, specifications, and other information from the Certified Vendor Information (CVI) Package CD, PN 09-CVI-009.

Refer to Appendix A.5 Engineering Drawings for the list. These drawings are available on the Certified Vendor Information Package CD. When referring to engineering drawings always use the latest revision for up to date information.

Note: Every attempt has been made to update this manual to remain current with the engineering drawings. If a discrepancy occurs the engineering drawings will take precedence over this manual.

Technical content for this manual is in accordance with the following specifications:

- U.S. Department of Transportation – Federal Highway Administration – Guidelines for the Installation, Maintenance and Repair of Structural Supports for Highway Signs, Luminaries, and Traffic Signals.

  Note: This manual is available for download at http://www.fhwa.dot.gov/bridge/signinspection.pdf.

- National Cooperative Highway Research Program (NCRHP) Report 469.

For DTI Installation:

- Specification for Structural Joints Using ASTM A325 or A490 Bolts dated June, 2000 by the Research Council on Structural Connections (RCSC).

1.3 System Overview

The RPM8 typically consists of multiple Radiation Sensor Panels (RSPs) positioned on opposite sides of a lane through which a vehicle or container will pass. A set of RSPs at each lane is connected to a local Control Box (CB) that provides the basic control and alarm functions for each individual lane. Applications may be single lane or multilane configurations. In most deployments, each lane, gate, etc., will be observed by at least one pair of RSPs. The exact system configuration for each different border security vector will vary according to the infrastructure and daily operations at each site.

Figure 1-1 shows a concept of one possible configuration with RSPs located on both sides of multiple vehicle lanes.

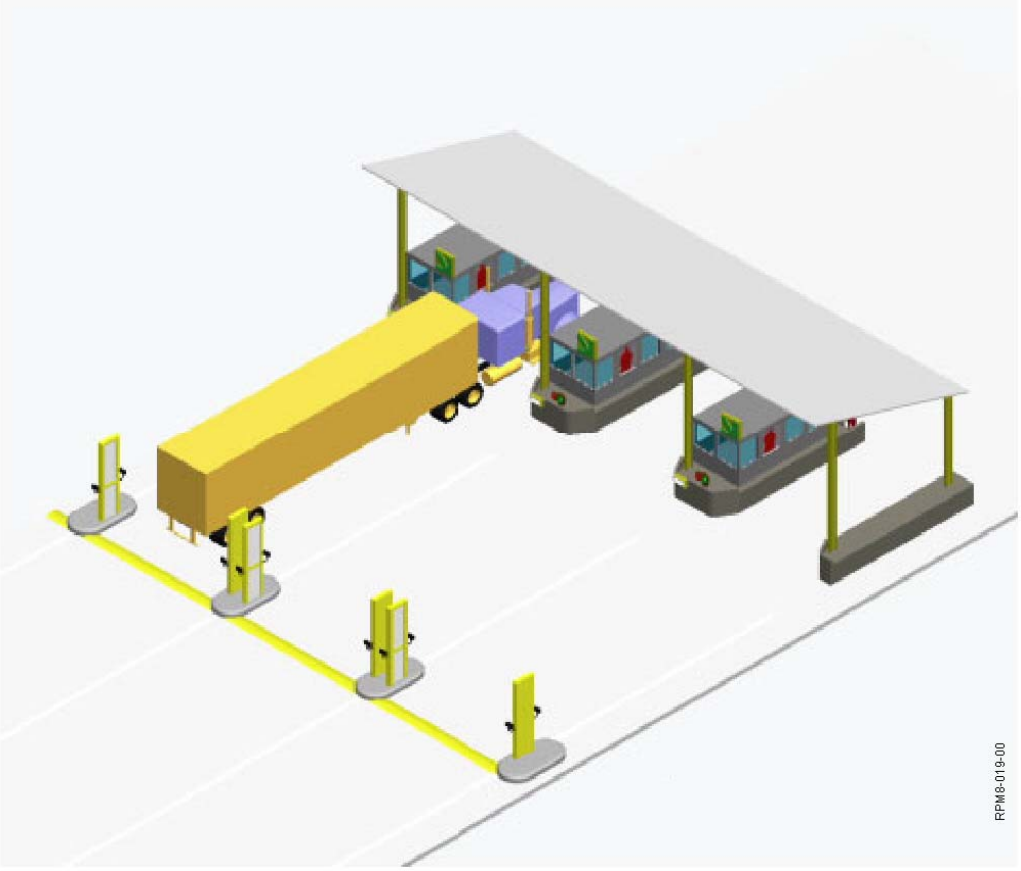

Figure 1-1 RSP Configuration – Multiple Vehicle Lanes

One or several RPM8 systems are connected to a Supervisory Computer that provides remote control of the system along with many other functions associated with managing the system operation and logistics of vehicle screening at a border crossing.

At multilane border crossings, the Supervisory Computer can generate additional alarms based on real-time data from the RPMs in any individual lane of traffic. The Supervisory Computer is also capable of processing data from multiple lanes to potentially isolate the location of a source that causes alarms in multiple lanes. Monitor Computer(s) are generally deployed to display the information shown on the Supervisory Computer and in secondary screening operations.

For each RPM system, the Supervisory Computer and the Monitor Computer(s) are capable of network communication with an area or national border security network that could conceivably tie all entry ports (vehicle, ship, air, rail, etc.) to a common data collection and processing system.

1.4 System Description

A typical RPM8 system includes two or more Radiation Sensor Panels (RSPs), Control Box, Vehicle Presence Sensors (VPS), shielding/support stands, Annunciator assembly for each portal or lane, capability for Visual Identification System, and Analysis/Control Software components.

Support Stands

Support stands (shown in yellow) mount the RSPs, provide structural support for Personally Owned Vehicle (POV) or Truck/Cargo configurations (truck/cargo stands typically mount two RSPs each per side and POV stands mount one RSP per side), and provide physical protection as well as additional radiation shielding. Figure 1-2 shows two types of stands (Type 1 and Type 2/3) available with the RPM8 system (See Section *A4 RPM Support Stand Dimensions* for details).
Note: Type 2 and Type 3 stands are physically the same; Type 3 stands are finished differently.

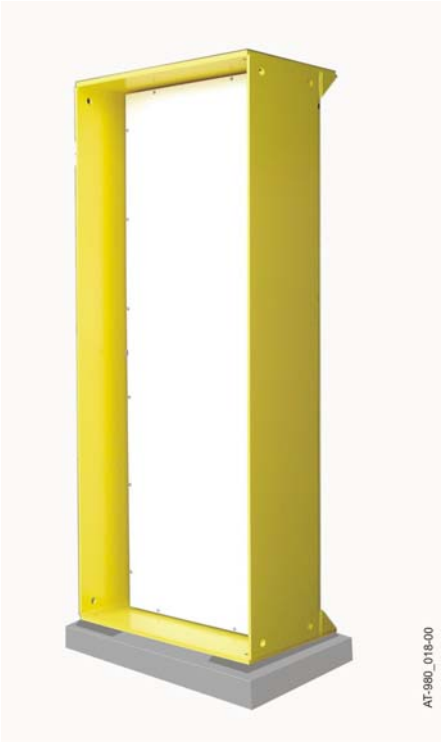

Figure 1-2 Type 1 and Type 2/3 Support Stands

RSPs

Two or more RSPs (shown in support stand above) are positioned on opposite sides of a lane through which a vehicle or container will pass. Each RSP contains the following components:

- Gamma-Ray Detection Module
- Neutron Detection Module
- Electronics Tray
- Environmental Enclosure

  Note: The detection modules and the RSP electronics are contained in an environmental enclosure which provides protection against adverse weather and environmental conditions. The enclosure conforms to NEMA 250-1997 Standard for Enclosure Type 4X with respect to weather protection and corrosion resistance. The enclosure is mounted within the support stand by fastening the RSP enclosure flanges to the back of the support stand using non-corrosive stainless steel hardware.
- Vehicle Presence Sensors (VPS).

  Note: The VPS is typically mounted inside the enclosure on the side-walls of the support stand.

Figure 1-3 shows the layout of the RSP components within the environmental enclosure.

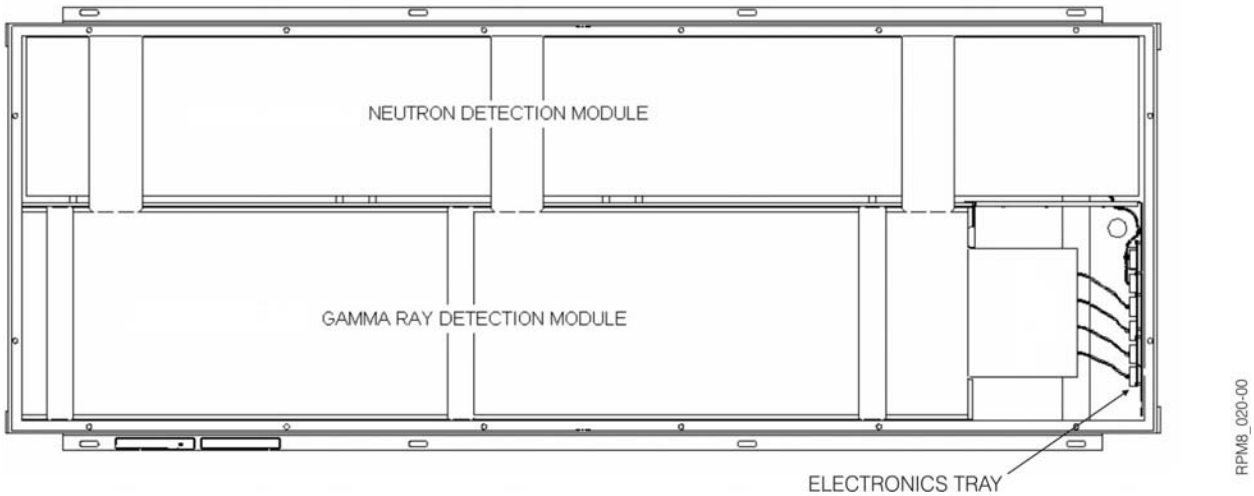

Figure 1-3 Environmental Enclosure

RPM Control Box (CB)

Each RPM System (Lane/Portal) contains a local Control Box (CB) (see Figure 1-4) that provides the basic control and alarm functions for each individual lane. The CB processes the signals from as many as sixteen RSPs with Vehicle Presence Sensors (VPS), and provides this data to the Supervisory computer. The CB generates alarms and sends them to the Annunciator and the Supervisory computer. The CB accepts commands from the Supervisory computer to set parameters and possibly generate additional alarms.

Note: The control box modules and all associated electronics are contained within an environmental enclosure which provides protection against adverse weather and environmental conditions. The enclosure conforms to NEMA 250-1997 Standard for Enclosure Type 4X with respect to weather

protection and corrosion resistance. Typically the enclosure is mounted with flanges to the side of the support stand (RSP1) using non-corrosive stainless steel hardware.

Figure 1-4 Control Box

Vehicle Presence Sensors (VPS)

The Vehicle Presence Sensors (VPS) (see Figure 1-5) detect the presence of a vehicle (road vehicles, train cars, etc.) that enters the Radiation Portal Monitor (RPM) and the sensor field of view. The vehicle triggers a signal upon entering and exiting the RPM, which provides a means to calculate vehicle speed. VPS are typically mounted on the inside surface of the support stands.

Note: The VPS used in the RPM8 are optical (break-beam type) sensors. Four are needed for each RSP (lower RSPs in Truck/Cargo configurations).

Figure 1-5 Vehicle Presence Sensor (VPS)

Interior Annunciator Assembly

The Interior Annunciator is a simple device, which monitors an individual lane to provide status and alarm notification to the Customs Inspector. This unit is normally mounted in the inspection booth. It gives audio and visual alarms to prompt appropriate user actions. The Key switch Enables, Disables or Resets RPM System (Control Box) from the Annunciator.

Figure 1-6 Interior Annunciator Assembly

Exterior Annunciator (ANE) Assembly

The Exterior Annunciator (Optional) (see Figure 1-7) monitors an individual lane to provide status and alarm notification to the operator (Customs Inspector). This unit is mounted in an external location. It gives audio voice and visual alarms to prompt appropriate user actions. The Key Switch Enables, Disables or Resets the RPM System (Control Box) from the Annunciator.

Notes:

- The Acknowledge button may be replaced with the Option of a Key Switch for added security at the customers' request. See Section 3.8.1.5 (Replace the Acknowledge Button with Key Switch (Optional)) for the procedure to replace the pushbutton with the key switch.
- The ANE modules and all associated electronics are contained within an environmental enclosure which provides protection against adverse weather and environmental conditions. The enclosure conforms to NEMA 250-1997 Standard for Enclosure Type 4X with respect to weather protection and corrosion resistance. Typically the enclosure is mounted with flanges to the side of the support stand (RSP1) using non-corrosive stainless steel hardware.

Figure 1-7 Exterior Annunciator Assembly

Visual Identification System (VIS)

The Visual Identification System (VIS) is an ancillary set of equipment consisting of cameras (not provided) and control electronics that allows for recording of multiple pictures of vehicles in each lane. The VIS can record images, from three cameras per lane, of every vehicle passing through its viewing area, or only those that produce an alarm. Data is transmitted from the VIS to the control box (CB), using an Ethernet connection.

Supervisory Computer Hardware (Optional)

The Supervisory Computer is the central controller for the RPM System. It runs the software and connects the peripherals necessary for system configuration and control, data acquisition, data storage, analysis, image display and communications. This computer interfaces and communicates with the RPMs and the Annunciators. The Supervisory Computer acts as the Supervisor's Workstation/Annunciator. Typically, there is only one Supervisory Computer for each site. The Supervisory Computer is equipped with a color

printer for generating real-time alarm reports. The Supervisory Computer is equipped with an uninterruptible power supply (UPS) for power backup.

Supervisory Computer Application Software

This is the software component of the Supervisory Computer. The application provides a graphical user interface (GUI) that gives an operator command and control functionality necessary for data acquisition and analysis, event and alarm processing, data storage and retrieval, and communications.

Monitor Computer Hardware (Optional)

Monitor Computers are generally identical to the Supervisory Computer, although they run a version of the Supervisory Computer application software that offers reduced functionality inasmuch that Monitor Computers lack the control functions of a Supervisory Computer.

Monitor Computer Application Software

Monitor Computers are used to display the information shown on the Supervisory Computer. This information appears in the Monitoring application, which displays information only, but does not allow for configuration modification or the set-up of parameters, and prevents the operator from accessing the Supervisory Computer database.

Battery Box

The Battery Box (see Figure 1-8) provides the necessary DC power for operating the RPM including back-up power via rechargeable battery. The Battery Box is typically found near the CB. The Battery Box is capable of operating an RPM system with up to 16 RSPs. The Battery Box is used to back-up the RPM hardware only. The Supervisory and Monitor Computers have independent UPS for power backup during AC power failures.

Note: The DC power supply, rechargeable battery and all associated electronics are contained within an environmental enclosure which provides protection against adverse weather and environmental conditions. The enclosure conforms to NEMA 250-1997 Standard for Enclosure Type 3R with respect to weather protection and 4X with respect to corrosion resistance. Typically the enclosure is mounted with flanges to the side of the support stand (RSP1) using non-corrosive stainless steel hardware.

Figure 1-8 Battery Box

1.5 Installation Logistics

This section describes the order in which installation activities must be performed and explains what is required during site preparation.

1.5.1 Site Preparation

Site preparation is the customer's responsibility. The site layout is prepared according to local requirements, regulations and codes.

Note: Refer to the Figures 3-1 and 3-2 - System Interconnect Diagrams for design information on the Site Layout.

The Site Preparation includes: (see Appendix B Site Preparation for Support Stand Installation)

- Site Layout
- Excavation and concrete work for the RPM stand foundations
- Installation of anchor bolts for RPM stands
- Installation of curbs, bull-noses and bollards
- Trenching and burial of conduit
- Routing of cables
- Installation of AC power service
- Erection of detector stands on concrete foundations.
- Complete Pre-Start – Installation Checklist (see Appendix D)

The RPM Installation includes:

- Mounting RPM components on detector stands
- Installation of conduit on detector stands
- Routing interconnecting cables
- Mounting Vehicle Presence Sensors (VPS)
- Connecting all components
- Installing lightning rods and grounding
- Connecting Main AC power
- Complete Installation Checklist (see Appendix E)
- System power up
- VPS Alignment
- Network Setup
- System Configuration
- System Check.

Unless otherwise provided for contractually, those installing the RPM System are also responsible for:

- Support stand-mounting hardware (unless otherwise noted).

- All electrical cabling and conduit to system components.
- Unistrut for mounting conduit and Unistrut mounting hardware.
- Unistrut for mounting VSPs and mounting hardware.
- Electrical power connections to the Battery Box, Supervisory Computer, Monitor Computer, and VIS (if applicable).
- Lifting and movement of all equipment and the erection of all structures.

Notes:

- Approvals **must** be obtained from a local civil engineer with authority in the customer's region to mount the support stands to the footings.
- Lifting the equipment (ie. Support Stands) must be performed under the supervision of a Certified Rigging Specialist.

  Note: The approximate weight of one Support Stand with RSP is 2,700 lbs.

1.5.2 Installation Sequence

The installation should take place in the following sequence:

1. Prepare the site and lay out the components. See Section 1.5.1 - Site Preparation procedure.
2. Install the RSP support stands on concrete footings. See Section 2.3.1 - Type 1 Support Stand Installation or Section 2.3.2 - Type 2/3 Support Stand Installation procedures.
3. Mount the Control Box (CB), Battery Box and Exterior Annunciator (ANE). See Section 2.3.4 - Control Box, Battery Box and Exterior Annunciator Installation procedure.
4. Install conduit for the Control Box (CB), RSP, VPS, and Battery Box according to the Component Interconnect. See Section 2.3.3 - Conduit Installation for details.
5. Implement the Ground Loop (if required). This device is not supplied as part of the RPM8 hardware delivered and the necessary installation instructions can be found in the vendor's documentation package. Also see Section 2.3.5 - Ground loop Installation procedure.
6. Install the Traffic Light Controller (TLC) (if required). This device is not supplied as part of the RPM8 hardware delivered and the necessary installation instructions can be found in the TLC vendor's documentation package. See Section 2.3.6 Traffic Light Controller Installation procedure.
7. Install the Annunciators in the Operator's booths. See Section 2.3.7 - Annunciator Installation section for instructions.
8. Set up the Supervisory and Monitor PCs, and printers. See Section 3.1 - Component Interconnection for details and refer to the "RPM8 Radiation Portal Monitor System User's Manual" for software installation instructions.
9. Connect the RSP (which includes VPS wiring) and set the DIP-switches. See Section 3.2 - Connecting the RSPs and Setting DIP Switches section for instructions.
10. Connect the Control Box (CB) (which includes ground loop and traffic light/controller wiring). See Section 3.3 - Connecting the Control Box section for instructions.
11. Connect the Interior Annunciators (ANI) and/or Exterior Annunciators. See Section 3.4 - Connecting the Interior and Exterior Annunciators (ANI/ANE) section for instructions.
12. Connect the Battery Box. See Section 3.5 - Connecting the Battery Box section for instructions.

13. Connect the Ground Loop. See Section 3.6 - Connecting the Ground Loop section for instructions.
14. Connect the Traffic Light Controller (TLC). See Section 3.7 - Connecting the Traffic Light Controller (TLC) section for instructions.
15. Install the Annunciators (Multiple Annunciators). See Section 3.8 - Installing the Annunciator Assembly section for instructions.
16. Set up the network and connect the Supervisory and Monitor PCs. See Section 3.9 - Connecting the Supervisory PC and Section 3.10 - Connecting the Monitor PCs sections for additional information.
17. Configure the Control Box (CB). Refer to the "RPM8 Radiation Portal Monitor System User's Manual" for configuration instructions.
18. Configure the Supervisory and Monitor PCs. Refer to the "RPM8 Radiation Portal Monitor System User's Manual" for configuration instructions.
19. Configure the cameras (not provided) if required. This device is not supplied as part of the RPM8 system and the necessary installation instructions can be found in the vendor's documentation package.

1.5.3 Recommended Transport and Storage – Support Stands

The support stands are delivered packaged in plywood containers with white closed cell foam packaging used for cushioning the support stands against the plywood. The packaging was designed for the prevention of shipping damage, **but was never intended for outdoor storage of the units in the packaging**, nor for the transport of packages in open trucks.

Note: The paint used on the stands is designed for outdoor use, but not for immersion in water, and under normal conditions the stands would have an opportunity to drain and dry off. If the packaged stands are left outdoors for a prolonged period, the white foam packaging used under the plywood will trap water against the back side of the stands and provide a condition where the paint would blister.

To prevent this type of damage from occurring the following are recommendations:

1. All transport of packaged stands should be carried out in closed trucks or rack-and-tarp trucks to prevent dirt and moisture on the packaging materials or the retention of water between the packaging and the stands.
2. Upon receipt at the site the following storage terms should be considered:
   a. **Short Term Storage** – For installation within 5 days of receipt, stands can be kept in packaging until installation.
   b. **Long Term Storage** – The preferred method is to store packaged support stands indoors in a dry environment. If indoor storage is not possible, remove all plywood and white packaging foam from the support stands.

      Note: Do not cover Support Stands with tarpaulin, plastic sheets or other materials which may cause entrapment of water against the painted finish.

2.0 System Installation

2.1 RPM Configuration

Support Stands are available in two types:

- Type 1 Stands have side mounted support feet and anchor rods pass through the support feet attaching the support stand to the concrete footing.
- Type 2/3 Stands are bolted directly to the concrete footing through the base plate.

The RPM can be configured for:

- Personally Owned Vehicles (POV) traffic
- Truck/Cargo traffic
- Rail traffic

RPM configurations are used to provide uniform sensitivity coverage for the measurement of possibly shielded radioactive sources over the entire area of interest. The height required to scan Personally Owned Vehicles (POV) is 2.5 m while the required height for Truck/Cargo deployments is 4 m. The POV configuration requires the height of a single RSP and the Truck/Cargo configuration requires the height of two RSPs stacked together.

2.1.1 POV Configuration

A typical POV RPM consists of two RSPs (in shielding/support stands) and a Visual Identification System (VIS) for each lane. A Control Box (CB), Battery Box, and Vehicle Presence Sensors (VPS) are typically mounted on the RSP support stands. Each lane has an Annunciator assembly mounted in the Operator's booth. The optional Exterior Annunciator (ANE) if used, is mounted to the RSP 1 support stand (or mounted in a location the customer chooses).

Note: When mounting the support stand to the concrete footing orient the support stands so that the conduit access opening on the back of the RSP (square opening in the stand) is at the top.

Figure 2-1 shows a typical POV Configuration:

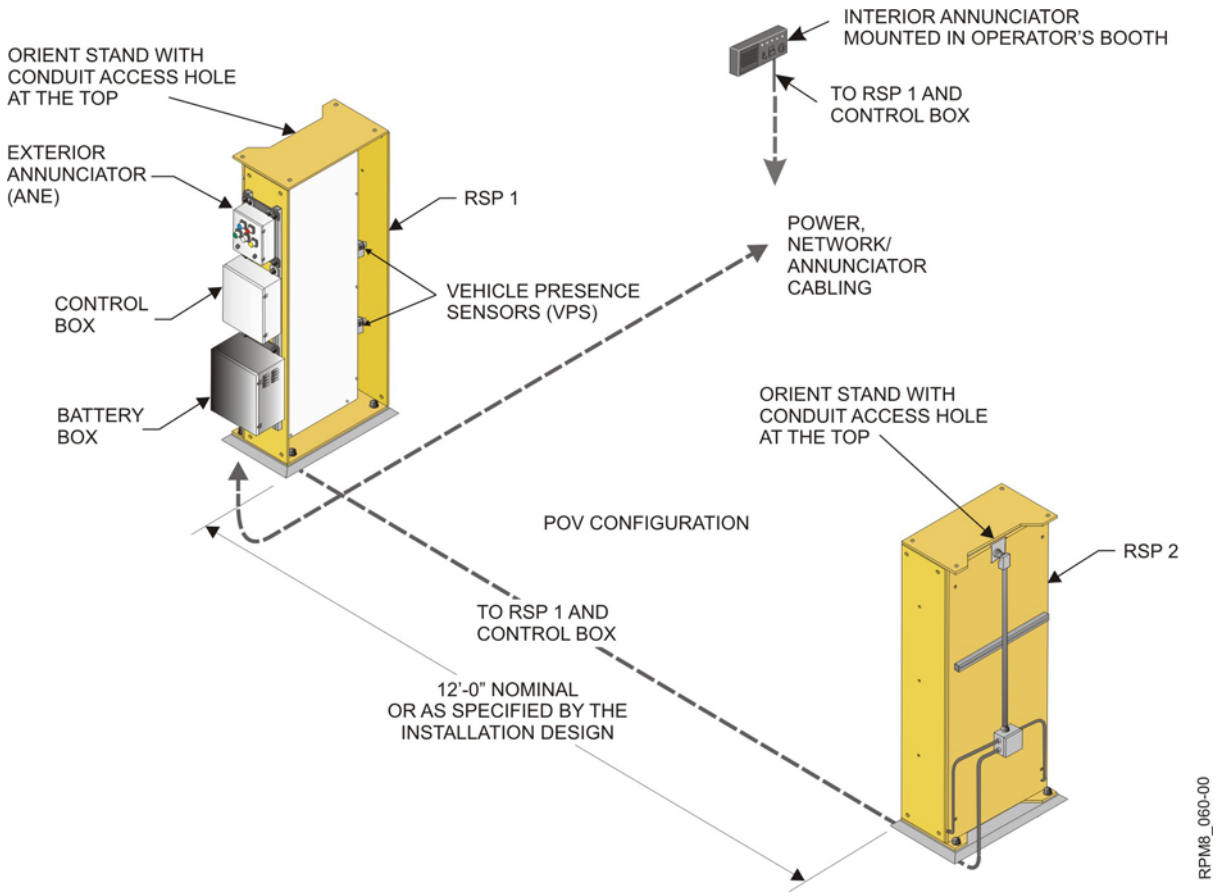

Figure 2-1 POV Site Layout

2.1.2 Truck/Cargo Configuration

A typical Truck/Cargo RPM consists of four RSPs (in shielding/support stands) and a Visual Identification System (VIS) for each lane. A Control Box (CB), Battery Box, and Vehicle Presence Sensors (VPS) are typically mounted on the lower RSP support stands. Each lane has an Annunciator assembly mounted in the Operator's booth. The optional Exterior Annunciator (ANE) if used, is mounted to the RSP 1 support stand (or mounted in a location the customer chooses).

Note: The typical Truck/Cargo stand configuration is made up of two support stands, an upper Stand RSP 3 mounted to the lower Stand RSP 1 (RSP 4 over 2 on the opposite side of the lane). Before mounting the lower support stands RSP 1 and 2 to the concrete footing, orient the lower support stands RSP 1 or 2 so the conduit access opening on the back of the RSP (square opening in the stand) is at the bottom. Support stands RSP 3 and 4 are mounted on top of the lower stands (RSP 1 and 2 respectively) oriented so that the conduit access opening on the back of the RSP (square opening in the stand) is at the top.

Figure 2-2 shows a typical Truck/Cargo Configuration:

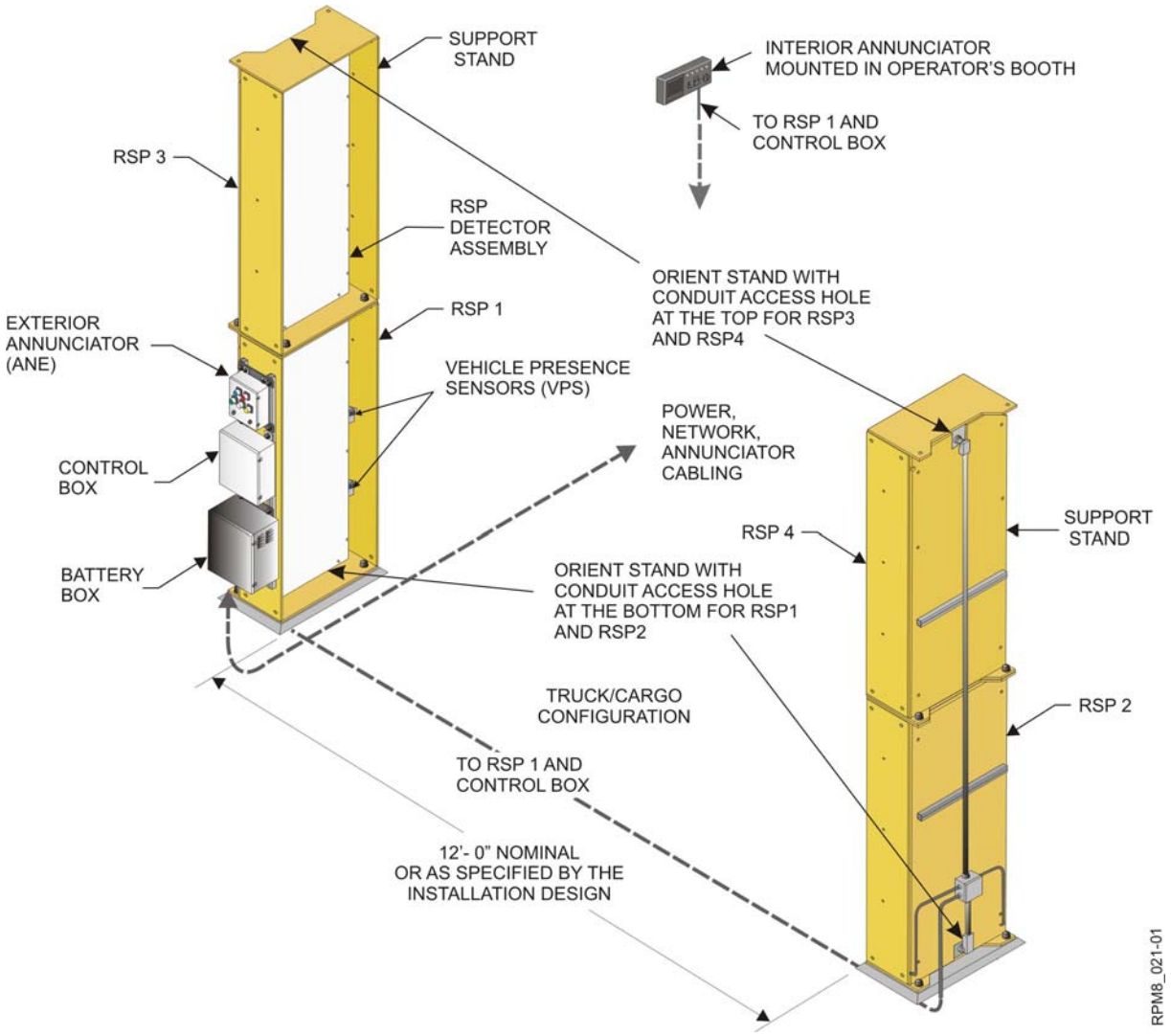

Figure 2-2 Truck/Cargo Site Layout

2.2 Installing Components and Hardware

The Radiation Portal Monitor System is typically delivered to the site in two separate lots. The Radiation Sensor Panels are pre-installed in the support stands prior to shipment. The required numbers of RSPs are delivered to the site on flat bed trucks. All other modules with their associated components and hardware are packaged together on a shipping skid and delivered to the site typically as a separate shipment.

While certain specific mounting hardware is included with the RPM components, the majority of the general installation hardware must be provided by the site contractor. The contractor is responsible for acquiring hardware that complies with the requirements and specifications in accordance with this manual and with the engineering documentation provided with the Certified Information Package Part No. 09-CVI-001, supplied by SAIC Exploranium.

Tables 2-1 and 2-2 list all the hardware required to complete the installation of the Support Stands and the attachment of ancillary equipment with the exception of common conduit components. Table 2-1 shows the hardware supplied by SAIC Exploranium. Table 2-2 shows the hardware, which is required but not supplied by SAIC Exploranium. Provision of this hardware is the responsibility of the Site Contractor. For further details refer to A.5 Engineering Drawings.

Table 2-1 – Hardware Supplied by SAIC Exploranium

QTY	Description	Specification	Finish
Type 1 Support Stand Hardware			
Hardware Kit PN 21437 for the Support Stand (Shroud) Foot (Typical 2 places) - POV and Truck/Cargo Configuration			
2	1-8UNC Hex Bolt (3-1/4" Long)	ASTM A325 Type 1	Hot Dip Galvanized
2	1-8UNC Hex Nut	ASTM A563, Grade DH	Hot Dip Galvanized
4	1" Flat Washer	ASTM F436 Type 1 Minimum Hardness Rc38	Mechanically Galvanized
2	1" DTI (Direct Tension Indicator)	ASTM F959	Mechanically Galvanized
Hardware Kit PN 21438 for Support Stand (Shroud) **Splice Plate (Typical 2 places)**			
4	1-8UNC Hex Bolt (3" Long)	ASTM A325 Type 1	Hot Dip Galvanized
4	1-8UNC Hex Nut	ASTM A563, Grade DH	Hot Dip Galvanized
12	1" Flat Washer	ASTM F436 Type 1 Minimum Hardness Rc38	Mechanically Galvanized
4	1" DTI (Direct Tension Indicator)	ASTM F959	Mechanically Galvanized

Notes:

- DTIs must be completely compressed showing no visible gaps (equivalent to bolt tension of 51,000 lbs) Refer to Figure 2-4 DTI Installation for Type 1 Support Stand Foot.
- DTIs must be completely compressed showing no visible gaps (equivalent to bolt tension of 51,000 lbs) Refer to Figure 2-6 DTI Installation for Type 1 Support Stand for Splice Plate.
- Galvanized nuts and bolts to be obtained as a set from a single manufacturer.
- The manufacturer must supply galvanized nuts with a lubricant that is clean and dry to the touch and colored to indicate its presence.
- Hot Dip Galvanized per spec. ASTM A153, Class 'C'
- Mechanically Galvanized per spec. ASTM B695, Class 25 minimum

Type 2/3 Support Stand Hardware			
Hardware Kit PN 21439 for Support Stand Combination - Truck/Cargo Configuration			
4	1-8UNC Hex Bolt (3-1/2" Long)	ASTM A325 Type 1	Hot Dip Galvanized
4	1-8UNC Hex Nut	ASTM A563, Grade DH	Hot Dip Galvanized
12	1" Flat Washer	ASTM F436 Type 1 Minimum Hardness Rc38	Mechanically Galvanized
4	1" DTI (Direct Tension Indicator)	ASTM F959	Mechanically Galvanized

Notes:

- DTIs must be completely compressed showing no visible gaps (equivalent to bolt tension of 51,000 lbs) Refer to Figure 2-9 DTI Installation for Type 2/3 Support Stand.
- Galvanized nuts and bolts to be obtained as a set from a single manufacturer.
- The manufacturer must supply galvanized nuts with a lubricant that is clean and dry to the touch and colored to indicate its presence.
- Hot Dip Galvanized per spec. ASTM A153, Class 'C'
- Mechanically Galvanized per spec. ASTM B695, Class 25 minimum

Table 2-2 – Hardware NOT Supplied by SAIC Exploranium

QTY	Description	Specification	Finish
Type 1 Support Stand Hardware			
Hardware Mounting the Support Stand to Concrete Footing - POV and Truck/Cargo Configuration			
4	1" Anchor Rods	ASTM F1554 – Grade 55	Determined by civil engineer
8	1-8UNC Hex Nut	ASTM A563, Grade DH	Hot Dip Galvanized
8	1" Flat Washer	ASTM F436 Type 1 Minimum Hardness Rc38	Mechanically Galvanized
Type 2/3 Support Stand Hardware			
4	1" Anchor Rods	ASTM F1554 – Grade 55	Determined by civil engineer
8	1-8UNC Hex Nut	ASTM A563, Grade DH	Hot Dip Galvanized
8	1" Flat Washer	ASTM F436 Type 1 Minimum Harness Rc38	Mechanically Galvanized

Notes: For Type 1 and Type 2/3 Support Stands

- Approval for mounting Support Stand to concrete footing must be obtained from local civil engineer with authority in the customer's region.
- Tighten Anchor nuts to snug-tight condition and then rotate 1/3 of a turn more.

Vehicle Presence Sensors (VPS) (Optical Sensors)			
Hardware to mount the Vehicle Presence Sensors (VPS) to the Support Stand (Typical 2 places) - POV and Truck/Cargo Configuration			
2	Adjustable VPS (Optical Sensor) Rail – Unistrut P7000 SS		Stainless Steel
6	1/4-20UNC Hex Bolt (1-1/4" Long)	ASTM 593 or UNS S30400 With 20ksi min yield strength	Stainless Steel
6	1/4-20UNC Hex Nut	ASTM 593 or UNS S30400 With 20ksi min yield strength	Stainless Steel

QTY	Description	Specification	Finish
6	1/4” Lock Washer	ASTM 593 or UNS S30400 With 20ksi min yield strength	Stainless Steel
12	1/4” Flat Washer	ASTM 593 or UNS S30400 With 20 ksi min yield strength	Stainless Steel
Note: Torque 1/4-20UNC bolts to 72 in-lbs			
Hardware to hold the nylon cable ties to VPS (Typical 6 places)			
1	Cable Tie – Panduit – PLC2H-2S25		
1	Channel Nut – Unistrut P7006-1420EG		
1	1/4-20UNC Hex Bolt (5/8” Long)	ASTM 593 or UNS S30400 With 20ksi min yield strength	Stainless Steel
1	Flat Washer (9/32” ID x 5/8” OD)	ASTM 593 or UNS S30400 With 20ksi min yield strength	Stainless Steel
Note: Torque 1/4-20UNC bolts to 72 in-lbs			
Hardware to hold the VPS (Optical Sensor) Bracket to the Adjustable Rail (Typical 4 places)			
1	Channel Nut – Unistrut P7006-1420EG		
1	1/4-20UNC Hex Bolt (1/2” Long)	ASTM 593 or UNS S30400 With 20ksi min yield strength	Stainless Steel
1	1/4” Lock Washer	ASTM 593 or UNS S30400 With 20ksi min yield strength	Stainless Steel
1	1/4” Flat Washer	ASTM 593 or UNS S30400 With 20ksi min yield strength	Stainless Steel
Note: Torque 1/4-20UNC bolts to 72 in-lbs			
Conduit and Components			
Hardware to mount the Unistrut to the back of the Support Stand (1 Unistrut is needed for the POV Configuration, 2 are required for the Truck/Cargo Config.)			
POV Configuration			
1	Unistrut P1000 SS		Stainless Steel
1	Unistrut Clamps P3412 SS		Stainless Steel
Truck/Cargo Configuration			
2	Unistrut P1000 SS		Stainless Steel
2	Unistrut Clamps P3412 SS		Stainless Steel
Note: Use the existing Detector mounting bolt hardware to mount the Unistruts. Torque the 3/8-16 S.S. bolts to 228 in-lbs.			
Unistrut for Battery Box, Control Box and Exterior Annunciator Mounting			
Hardware to mount the Unistrut to the side of the Support Stand (2 Unistruts required) (Hardware typical 2 places)			
1	Unistrut P1000 SS		Stainless Steel
3	3/8-16 Hex Bolt (1-1/4” Long)	ASTM 593 or UNS S30400 With 20ksi min yield strength	Stainless Steel
3	3/8” Lock Washer	ASTM 593 or UNS S30400 With 20ksi min yield strength	Stainless Steel
6	3/8” Flat Washer	ASTM 593 or UNS S30400 With 20ksi min yield strength	Stainless Steel

QTY	Description	Specification	Finish
3	3/8-16 Hex Nut	ASTM 593 or UNS S30400 With 20ksi min yield strength	Stainless Steel
Note: Torque the 3/8-16 S.S. bolts to 228 in-lbs.			
Battery Box and Control Box			
Hardware to mount the Battery Box and Control Box to the Unistrut (Hardware typical 2 places)			
4	3/8-16 Hex Bolt (1/2" Long)	ASTM 593 or UNS S30400 With 20ksi min yield strength	Stainless Steel
8	3/8" Lock Washer	ASTM 593 or UNS S30400 With 20ksi min yield strength	Stainless Steel
4	3/8" Flat Washer	ASTM 593 or UNS S30400 With 20ksi min yield strength	Stainless Steel
4	Unistrut P1008U Channel Nut 316		Stainless Steel
Note: Torque the 3/8-16 S.S. bolts to 228 in-lbs.			
Exterior Annunciator			
Hardware to mount the Annunciator Mounting Bar to the Unistrut			
4	3/8-16 Hex Bolt (1/2" Long)	ASTM 593 or UNS S30400 With 20ksi min yield strength	Stainless Steel
8	Lock Washer	ASTM 593 or UNS S30400 With 20ksi min yield strength	Stainless Steel
4	Flat Washer	ASTM 593 or UNS S30400 With 20ksi min yield strength	Stainless Steel
4	Unistrut P1008U Channel Nut 316		Stainless Steel
Note: Torque the 3/8-16 S.S. bolts to 228 in-lbs.			
Hardware to mount the Exterior Annunciator to the Annunciator Mounting Bars			
4	3/8-16 Hex Bolt (1" Long)	ASTM 593 or UNS S30400 With 20ksi min yield strength	Stainless Steel
4	Lock Washer	ASTM 593 or UNS S30400 With 20ksi min yield strength	Stainless Steel
4	Flat Washer	ASTM 593 or UNS S30400 With 20ksi min yield strength	Stainless Steel
4	3/8-16 Hex Nut	ASTM 593 or UNS S30400 With 20ksi min yield strength	Stainless Steel
Note: Torque the 3/8-16 S.S. bolts to 228 in-lbs.			

2.3 Component Installation

This section contains a typical installation concept, with figures that show basic details for the assembly of components to the SAIC Exploranium radiation detection system. The instructions are provided for reference only, the installer may divert from this procedure due to local building practices and/or special requirements, but the final approval shall remain with the local Civil Engineer.

Customer shall be responsible for:

- Altering designs to comply with local codes, regulations, and plant requirements.
- Site layout, engineering, structural assembly and meeting building code.

Prior to installing the RPM components, the customer must arrange for the proper preparation of the concrete foundations. The foundation, the anchor rods and all other structural components must be designed by a qualified structural engineer to be suitable for local soil conditions, wind and seismic loadings. The structural design must be approved by a local civil engineer with the authority in the customer's region to certify that it meets the structural requirements and all building codes applicable to the region.

Construction of the local foundation and installation of the anchor rods is entirely the responsibility of the customer. The customer is referred to the U.S. Department of Transportation – Federal Highway Administration – Guidelines for the Installation, Maintenance and Repair of Structural Supports for Highway Signs, Luminaries, and Traffic Signals and the National Cooperative Highway Research Program (NCRHP) Report 469 for further information on methods of installing the anchor rods in concrete foundations. An excerpt from the specification describing one such method is provided in *Appendix B – Site Preparation for Support Stand Installation*, as a general guide. The anchor rods must be installed with high accuracy to avoid potential problems with misalignment with anchor holes in the stand base plate. It is recommended to use footing templates for this purpose. A typical footing template for the Type 1 stand is shown in Figure 2-3 and for the Type 2/3 stands in Figure 2-8. The concrete foundation must be completely cured before commencing stand installation.

Notes:

a. The design specification, handling, installation, and inspection of bolted joints in steel support structures shall be in accordance with the above specification.

b. The proper installation of anchor rods is the responsibility of the foundation contractor, and inspection and testing is to be performed by the foundation contractor.

c. Records should be kept of the dates and results of testing and inspection, and these records should be available for the Engineer of Records or the representative for review.

d. The Engineer of Record may require that their representative witness the inspection and testing.

e. Installation of the Support Stands onto the concrete footings is subject to local codes, regulations, building code requirements and the approval obtained from a licensed local Civil Engineer.

f. Use the appropriate lifting device, as approved by a Certified Rigging Specialist, to position the Support Stand assembly (weighing 2700 lbs/stand) over the anchor rods.

2.3.1 Type 1 Support Stand Installation

The instructions provided here describe the typical installation concept that complies with the system design requirements in accordance with the National Cooperative Highway Research Program (NCRHP) Report 469.

Each Support Stand arrives on site with the RSP installed.

Figure 2-3 show the Type 1 Support Stand Footing Template that may be used by the Foundation Contractor to avoid misalignment of anchor rods to the anchor holes in the stand base plate.

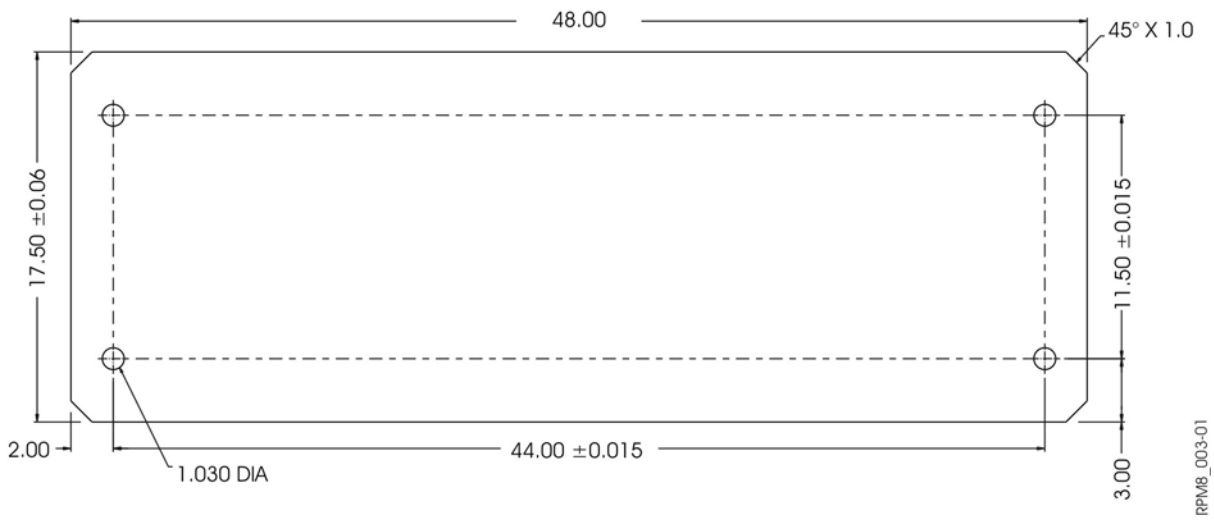

Figure 2-3 Type 1 Footing Template

Prepare the Support Stand (POV and Truck/Cargo Configuration) for Installation as follows:

1. Lay the Type 1 Support Stand on its back and position the Support Stand feet to be attached with the support stand in its proper orientation according to the configuration used (Refer to Figure 2-3):
   - For POV configuration the conduit access hole must be at the top of the Support Stand (RSP 1 and 2).
   - For Truck/Cargo configuration conduit access hole must be at the bottom of the Lower Support Stand (RSP 1 and 2).

     Note: The Upper Support Stand (RSP 3 and 4) shall be orientated so that the conduit access hole is at the top when installed.
2. Bolt the Support Stand feet onto the Type 1 Support Stands (RSP 1 and 2) using the supplied hardware as shown in Figure 2-4 and 2-5. Finger tighten the bolts

   Note: Use the following hardware supplied by SAIC Exploranium (Typical in 4 Places):
   (See Table 2-1 for more information)
   - One - 1-8UNC Hex Bolt
   - Two - 1” Flat Washers

- One - 1” DTI
- One - 1-8UNC Hex Nut

3. Ensure the Support Stand feet are square to the stand and torque the nuts to the specified tension as per step 4.

   Note: To prevent damaging the DTI, torque must be applied to the nut while the bolt head is secure.

4. All 1-8UNC hardware must be galvanized steel ASTM A-325 Type 1. Install the 1-8UNC bolts using Direct Tension Indicators (DTI) and when installed correctly the DTI must be completely compressed showing no visible gaps (equivalent to bolt tension of 51,000 lbs).

   Figure 2-4 shows the DTI installation Details for Type 1 Support Stands and Shroud Feet.

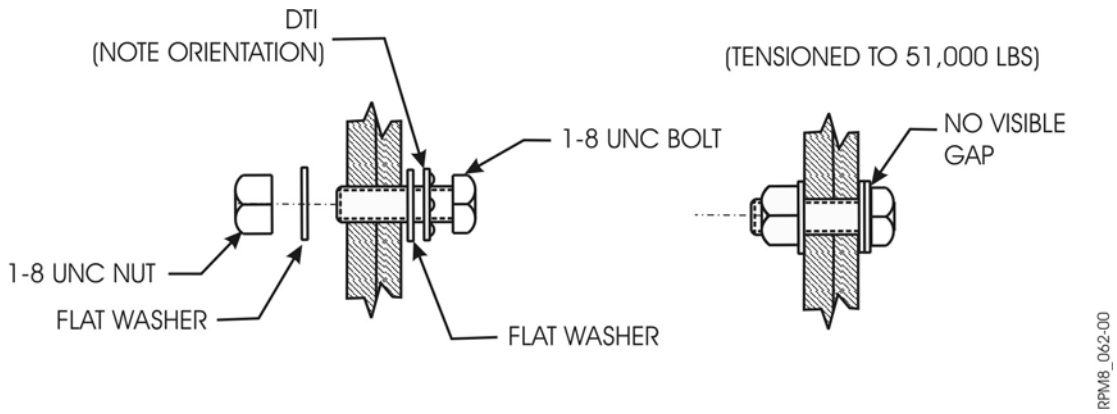

Figure 2-4 Type 1 DTI Installation for the Support Stand Foot

Install the Support Stand (POV or Lower Stand - Truck/Cargo Configuration):

Installation of Support Stand is in accordance with the U.S. Department of Transportation – Federal Highway Administration – Guidelines for the Installation, Inspection, Maintenance and Repair of Structural Supports for Highway Signs, Luminaries, and traffic Signals and the National Cooperative Highway Research Program (NCHRP) Report 469.

When the anchor rods are set and the concrete has reached sufficient strength (approved by the foundation contractor), the stand installation can commence.

Note: Use the following hardware NOT provided by SAIC Exploranium (Typical in 4 Places): (Refer to Figure 2-5 and Table 2-2 for more information)

- One - 1” Anchor Rod

  Note: Installed into concrete foundation (foundation contractor).
- Two - 1-8 UNC Hex Nut (One Leveling and One Top)
- Two - 1” Flat Washers

1. Install the leveling nuts on the anchor rods (Typical 4 places) and make level.
2. Install the leveling nut washers (Typical 4 places).

3. Use the appropriate lifting device (crane and rigging), as approved by a Certified Rigging Specialist, to position the Support Stand assembly (weighing 2700 lbs) over the anchor rods. The stand should safely sit on the four leveling nuts and washers.

   Note: The two holes at the top of the Support Stand side panels (as shown in Figure 2-5) can be used to lift the stands into position.

4. Install the flat washers and top nuts (typical 4 places) on the anchor rods to secure the stand. Do not tighten the top nuts.
5. Plumb the Support Stand by turning the leveling nuts.
6. When the stand is level in all directions, tighten the top nuts in a star pattern to a snug-tight condition (55 to 82 ft-lbs), mark the bolt on one flat with a corresponding mark on the base plate at each bolt. Top nuts should be turned in increments in a star pattern (at least two full tightening cycles) to the nut rotation of 1/3 turn.

   Note: After tightening the nut rotation should be verified.

7. Release the load from the crane.
8. Use a torque wrench to verify the torque is at least 275 ft-lbs.
9. After 48hrs, the torque wrench should be used to verify that the torque of at least or equal to 110 percent (302 ft-lbs) of the verification torque (275 ft-lbs) is required to additionally tighten the leveling nuts and the top nuts on the anchor rods.

   Note: An inability to achieve this torque shall be interpreted to indicate that the threads have stripped and should be reported to the Engineer of Record.

10. In locations that routinely experience seismic events or vibration that would have the potential to reduce the anchor bolt pretension, the installation design should consider the placement of a jam nut onto the anchor rod following the prescribed torque verification.

    Note: If jam nuts or other locking devices are not used the Top Nut can be tack welded to the anchor rod on the unstressed (top) surface.

11. Application of high strength grout is optional, if grouting is required due to specific installation design requirements then grout is applied under the RPM Support Stand in accordance with the following step.
12. A high strength grout (minimum strength of 5,000psi) may be applied under the entire base plate of the stand extending outwards by approximately 1” all around the base plate (as shown in Figure 2-5).

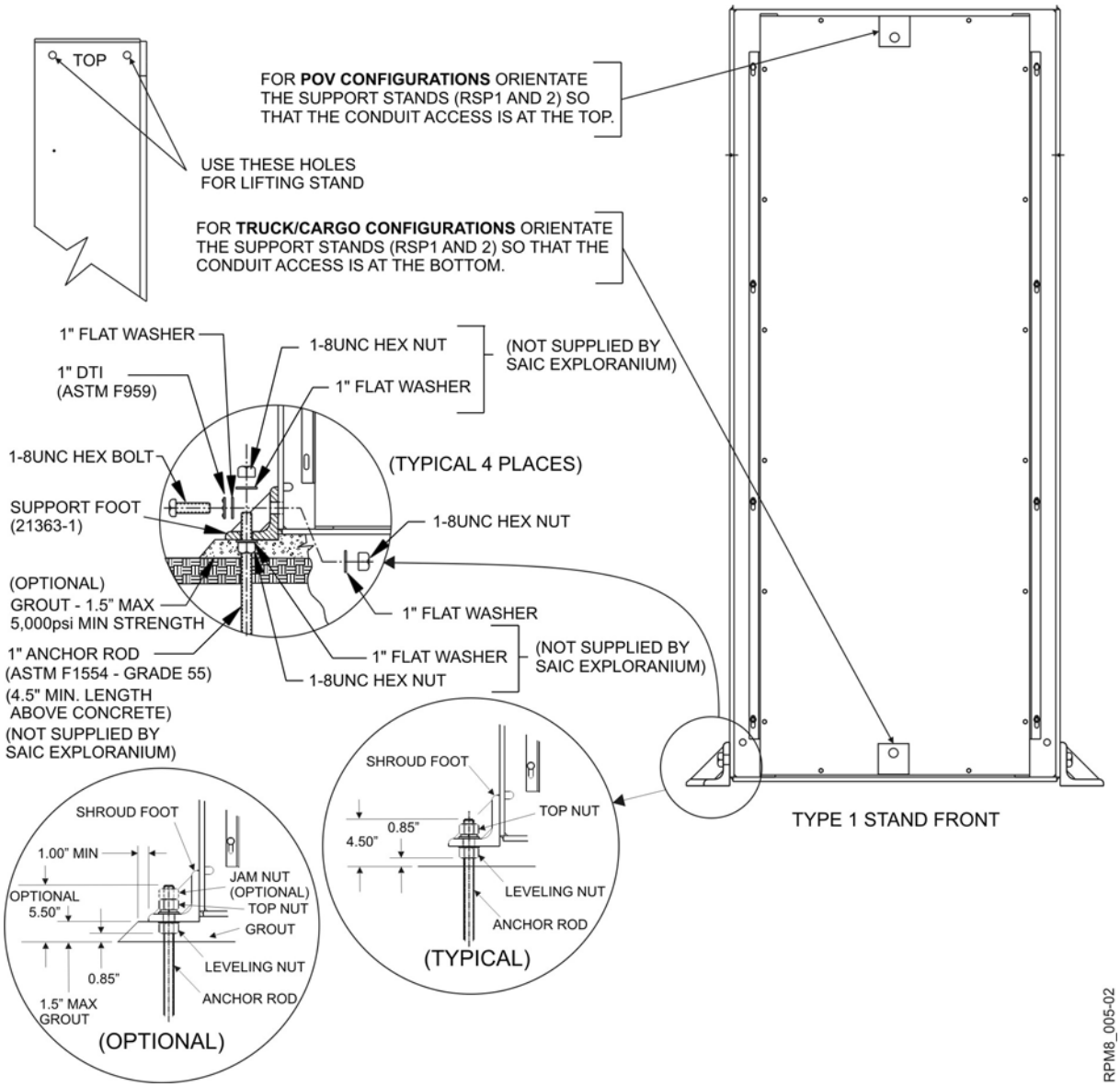

Figure 2-5 Type 1 Support Stand Installation

Install Type 1 Upper Support Stands for Truck/Cargo Configurations as follows:

1. For all upper and lower stand combinations (typically for Truck/Cargo lanes), bolt the upper stand (RSP 3 or 4) to the lower stand (RSP 1 or 2) using the galvanized splice plate on both sides as shown in Figure 2-7. Ensure that the lower stand in the combination is orientated correctly with the electronics facing down towards the bottom of the stand and the upper stand is orientated with the electronics facing up towards the top of the stand as shown in Figure 2-7.

2. Use the appropriate lifting device (crane and rigging), as approved by a Certified Rigging Specialist, to position the upper support stand assembly (weighing 2700 lbs/stand) over the lower support stand.

   Note: The holes at the top of the Support Stand sides (as shown in Figure 2-7) can be used to lift the upper stands (RSP 3 and 4) into position.

3. Fasten the splice plates to the upper and the lower stands with the following hardware supplied by SAIC Exploranium (Typical in 4 Places): (See Figure 2-5 and Table 2-1 for more information)
   - One - 1-8UNC Hex Bolt
   - Three - 1" Flat Washers
   - One - 1" DTI
   - One - 1-8UNC Hex Nut
4. Tighten the nuts to completely compress DTI showing no visible gaps (equivalent to bolt tension of 51,000 lbs). See Figure 2-6 Type 1 DTI Installation for Splice Plate.

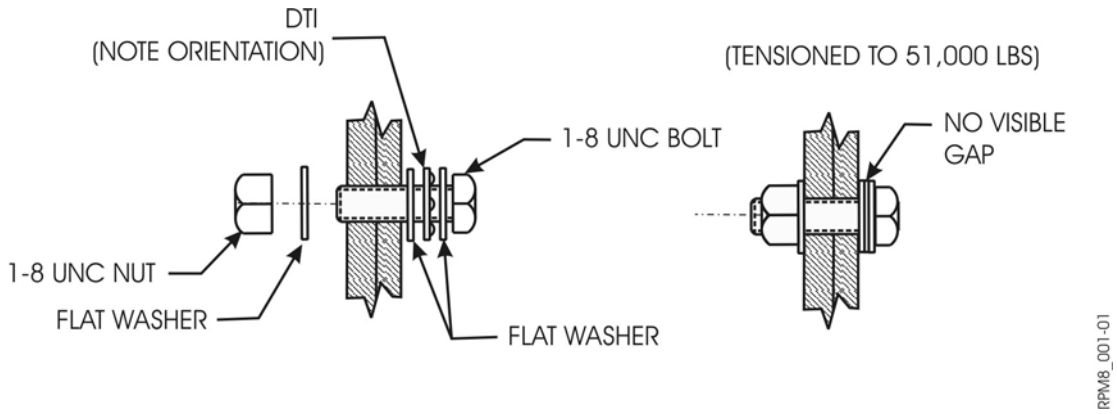

Figure 2-6 Type 1 DTI Installation for Splice Plate

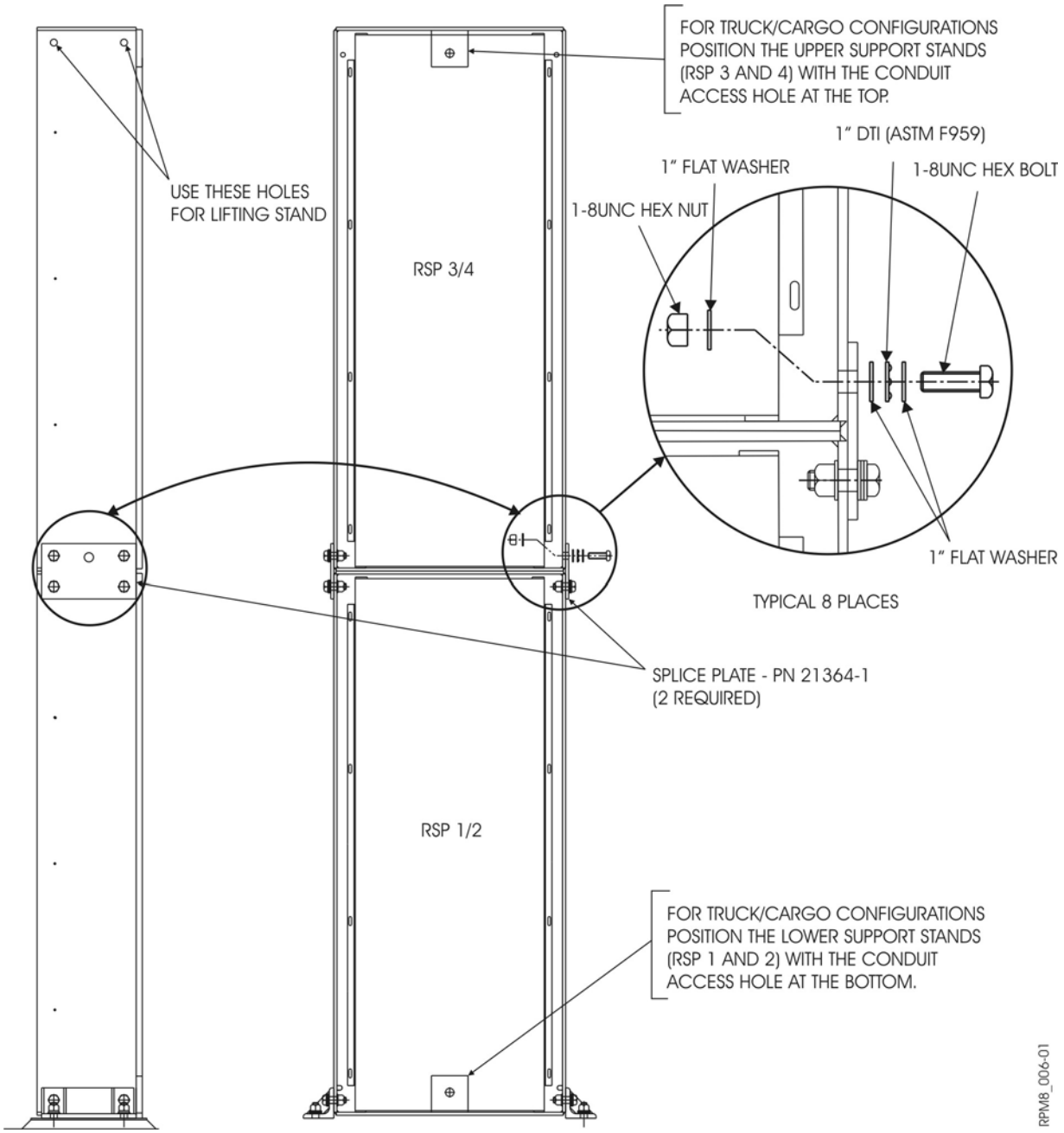

Figure 2-7 Type 1 Support Stand Combination Installation

Note: The remaining hardware is typical to both Type 1 and Type 2/3 Support Stands (except where noted) and is shown in Sections 2.3.3 and 2.3.4.

2.3.2 Type 2/3 Support Stand Installation

The instructions provided here describe the typical installation concept that complies with the system design requirements in accordance with the *Specification for Structural Joints Using ASTM A325 or A490 Bolts* dated June, 2000 by the Research Council on Structural Connections (RCSC).

Each Support Stand arrives on site with the RSP installed.

Figure 2-8 show the Type 2 Support Stand Footing Template that may be used by the Foundation Contractor to avoid misalignment of anchor rods to the anchor holes in the stand base plate.

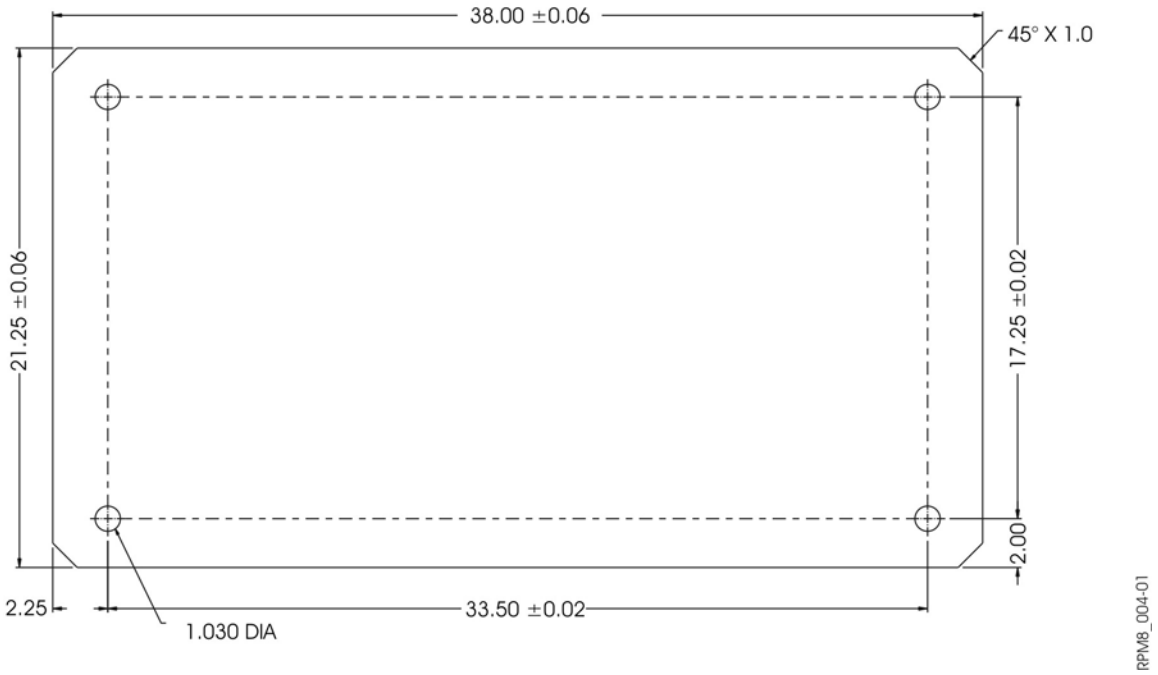

Figure 2-8 Type 2/3 Footing Template

Install the Support Stand (POV or Lower Stand - Truck/Cargo Configuration):

Installation of Support Stand is in accordance with the U.S. Department of Transportation – Federal Highway Administration – Guidelines for the Installation, Inspection, Maintenance and Repair of Structural Supports for Highway Signs, Luminaries, and traffic Signals and the National Cooperative Highway Research Program (NCHRP) Report 469.

Commence with the Stand Installation when the anchor rods are set and the concrete has reached sufficient strength (approved by the foundation contractor).

Note: Use the following hardware NOT provided by SAIC Exploranium (Typical in 4 Places): (Refer to Figure 2-9 and Table 2-2 for more information)

- One - 1” Anchor Rod

  Note: Installed into concrete foundation (foundation contractor).
- Two - 1-8 UNC Hex Nut (One Leveling and One Top)
- Two - 1” Flat Washers

1. Install the leveling nuts on the anchor rods (Typical 4 places) and make level.
2. Install the leveling nut washers (Typical 4 places).
3. Use the appropriate lifting device (crane and rigging), as approved by a Certified Rigging Specialist, to position the Support Stand assembly (weighing 2700 lbs) over the anchor rods. The stand should safely sit on the four leveling nuts and washers.

   Note: The two holes at the top of the Support Stand side panels (as shown in Figure 2-9) can be used to lift the stands into position.
4. Install the flat washers and top nuts (typical 4 places) on the anchor rods to secure the stand. Do not tighten the top nuts.
5. Plumb the Support Stand by turning the leveling nuts.
6. When the stand is level in all directions, tighten the top nuts in a star pattern to a snug-tight condition (55 to 82 ft-lbs), mark the bolt on one flat with a corresponding mark on the base plate at each bolt. Top nuts should be turned in increments in a star pattern (at least two full tightening cycles) to the nut rotation of 1/3 turn.

   Note: After tightening the nut rotation should be verified.
7. Release the load from the crane.
8. Use a torque wrench to verify the torque is at least 275 ft-lbs.
9. After 48hrs, the torque wrench should be used to verify that the torque of at least or equal to 110 percent (302 ft-lbs) of the verification torque (275 ft-lbs) is required to additionally tighten the leveling nuts and the top nuts on the anchor rods.

   Note: An inability to achieve this torque shall be interpreted to indicate that the threads have stripped and should be reported to the Engineer of Record.
10. In locations that routinely experience seismic events or vibration that would have the potential to reduce the anchor bolt pretension, the installation design should consider the placement of a jam nut onto the anchor rod following the prescribed torque verification.

    Note: If jam nuts or other locking devices are not used the Top Nut can be tack welded to the anchor rod on the unstressed (top) surface.
11. Application of high strength grout is optional, if grouting is required due to specific installation design requirements then grout is applied under the RPM Support Stand in accordance with the following step.
12. A high strength grout (minimum strength of 5,000psi) may be applied under the entire base plate of the stand extending outwards by approximately 1” all around the base plate (as shown in Figure 2-9).

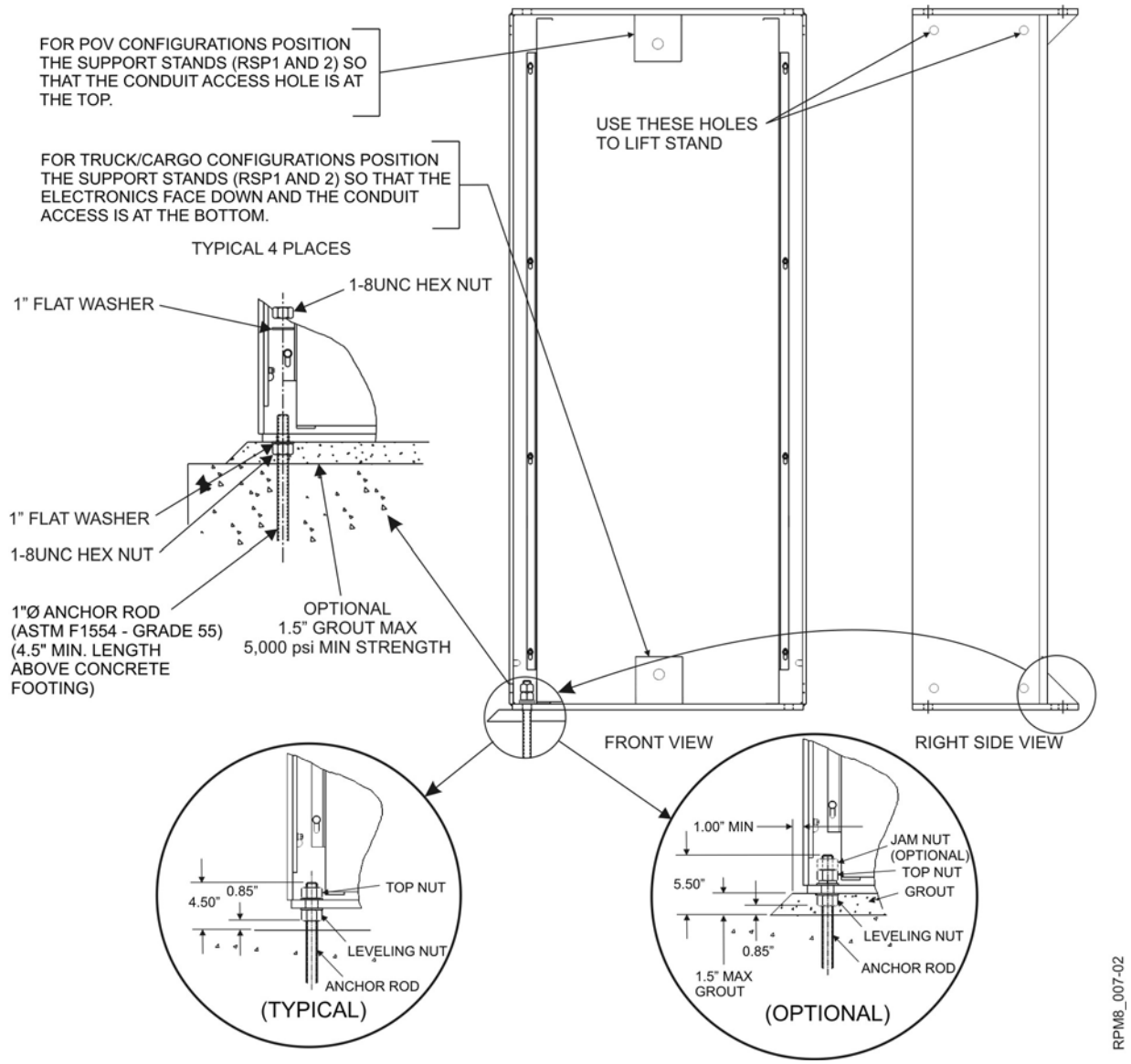

Figure 2-9 Type 2/3 Support Stand Installation

Install Type 2/3 Upper Support Stands for Truck/Cargo Configurations as follows:

1. For all RSP 1/ 3 and RSP 2/ 4 combinations (typically for Truck/Cargo lanes), bolt RSP 3 or 4 (the upper stand) directly to RSP 1 or 2 through the top and bottom plates as shown in Figure.2-11 (RSP 4 to RSP 2 on the opposite side)

   Note: This step is not necessary for the single height POV lanes.

2. Use the appropriate lifting device (crane and rigging) to position the upper support stand assembly (weighing 2700 lbs) over the lower support stand assembly. Secure each support stand with the hardware as shown in Figure 2-11.

   Note: The holes at the top of the Support Stand side plates (as shown in Figure 2-11) can be used to lift the stands into position.

3. Fasten RSP 3 to RSP 1 with the following hardware supplied by SAIC Exploranium (Typical in 4 Places): (See Table 2-1 for more information)
   - One - 1-8UNC Hex Bolt
   - Three - 1" Flat Washers
   - One - 1" DTI
   - One - 1-8UNC Hex Nut
4. Tighten the nuts to completely compress DTI showing no visible gaps (equivalent to bolt tension of 51,000 lbs). See Figure 2-10 Type 2/3 DTI Installation.

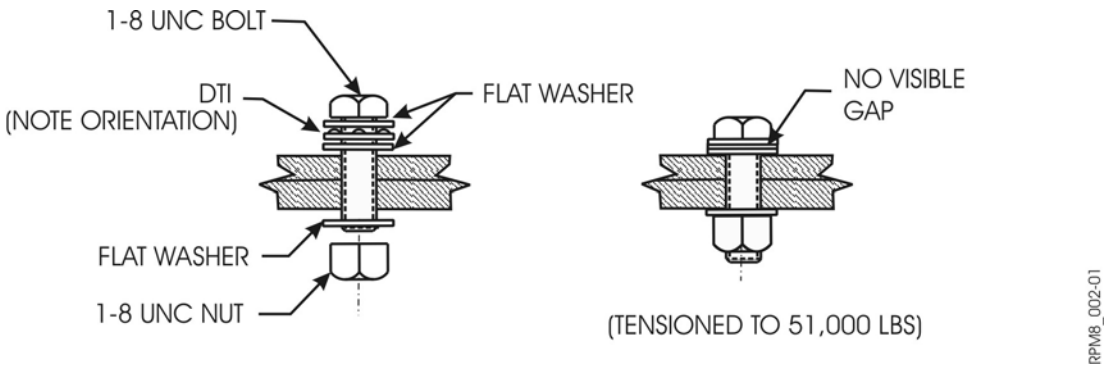

Figure 2-10 Type 2/3 DTI Installation

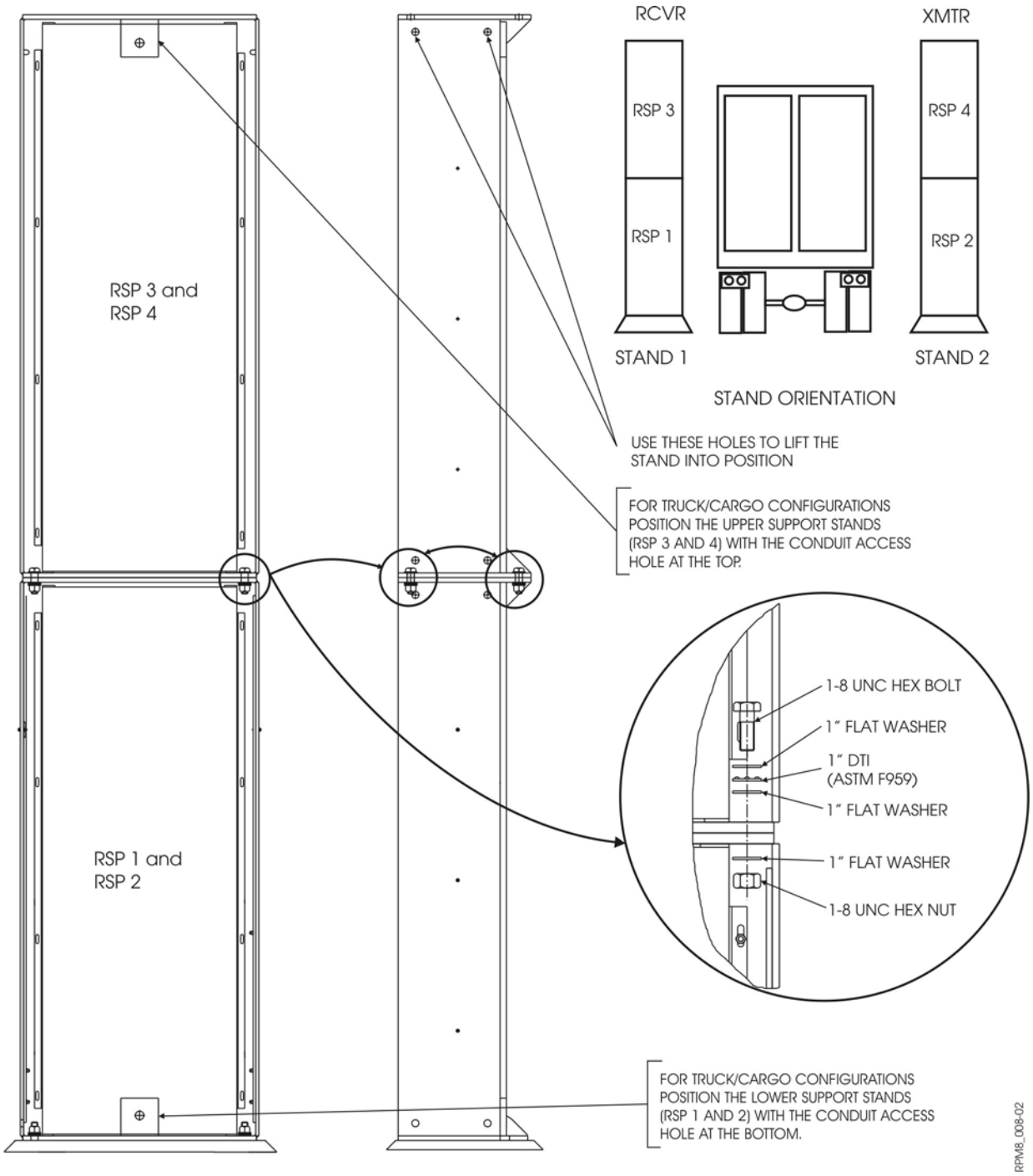

Figure 2-11 Type 2/3 Support Stand Combination Installation

2.3.3 Vehicle Presence Sensors (VPS) Installation

Each RPM portal requires a minimum of two pairs of VPS (optical sensors) (one pair as Transmitter and one pair as Receiver) for proper detection of vehicle presence and speed calculation. The location and alignment of the optical sensors is critical for the reliable functioning of the system. Refer to Figure 2-22 for the correct geometry of the optical sensor layout.

Install the Vehicle Presence Sensors (VPS) on the RSP support stands as shown in Figure 2-12:

Note: SAIC Exploranium supplies the VPS (Optical Sensor with cable and mounting hardware) and VPS bracket. SAIC Exploranium does NOT supply the Unistrut (Adjustable Rails) or stainless steel (S.S.) hardware (Refer to Table 2-2 for more information).

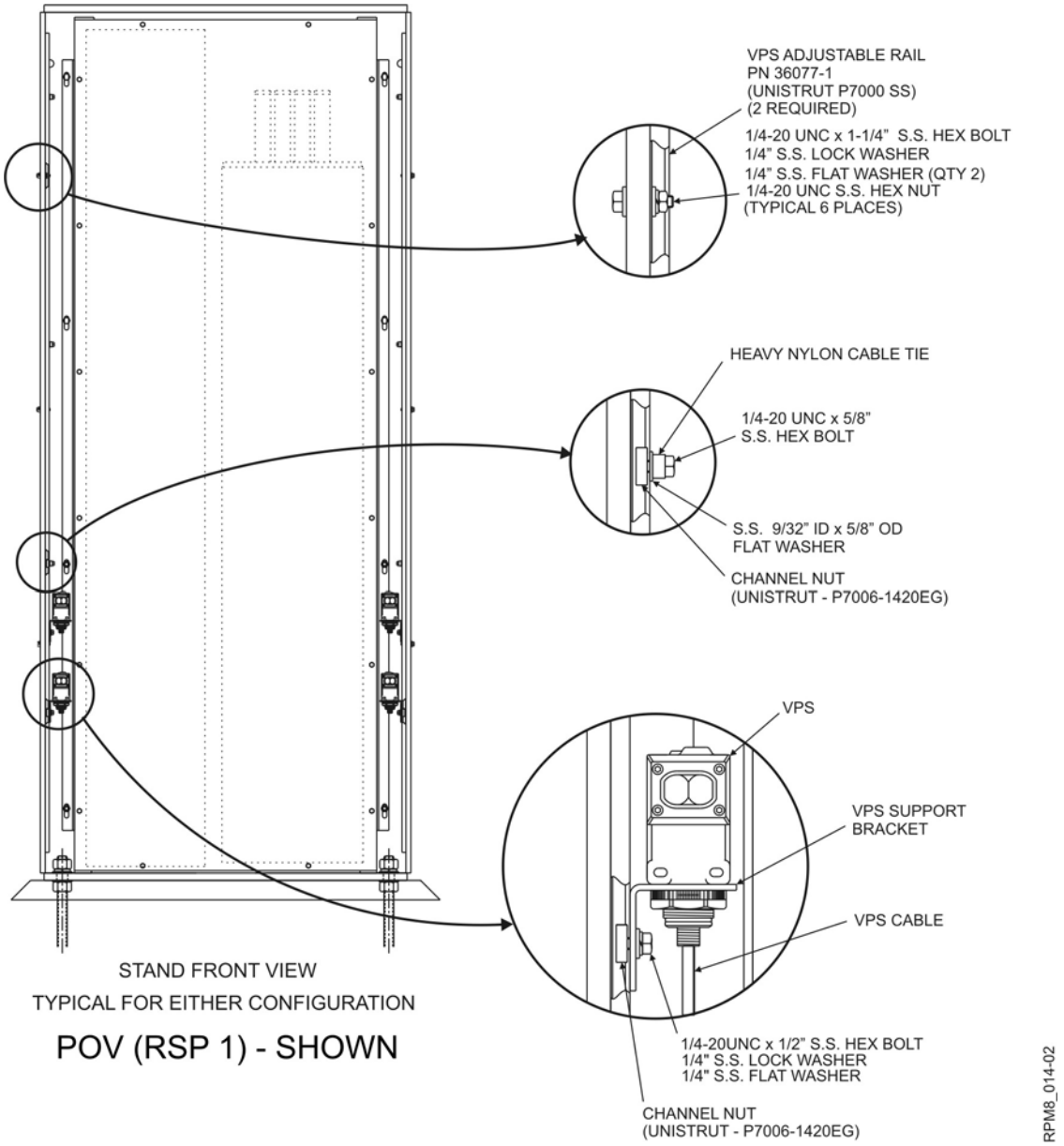

Figure 2-12 Unistrut/VPS (Optical Sensor) Installation

1. The Unistrut is obtained in 10 ft lengths, cut the Unistrut (adjustable rail NOT supplied) in half and use half for either side (Refer to Figures 2-12, 2-13 and Table 2-2 for more information). Position the Unistrut(s) in place according to Figure 13 and mark the location of the existing support stand holes onto the Unistrut(s) (hole dimensions are also given in Figure 13). Also refer to Engineering dwg(s). No. 36077-1and 36259 for more information (see Appendix A.5). Drill holes into Unistruts.

   Note: Refer to the following Engineering Drawing for specific Support Stand configuration:

   - For POV/Mixed Configuration refer to Engineering Dwg. No. 35259 sheet 2.
   - For Truck/Cargo Configuration refer to Engineering Dwg. No. 35259 sheet 1.

2. Using the existing holes in the support stand, install the Unistrut with the attaching hardware (Refer to Figure 2-12 and Table 2-2 for more information).

   Note: Use the following Stainless Steel (S.S.) hardware NOT supplied by SAIC Exploranium (Typical in three places/ Unistrut):

   a. S.S. 1/4 -20UNC Hex Bolt (1-1/4" long)
   b. S.S. 1/4" Lock Washers
   c. S.S. 1/4" Flat Washers (QTY 2)
   d. 1/4"-20UNC Hex Nut.

3. Torque bolts to 72 in-lbs.

4. Install the VPS support brackets to the Unistrut with the attaching hardware (Refer to Figures 2-13, 2-22 and Table 2-2 for more information).

   Note: A typical configuration consists of four VPS for each lower stand (and none for the upper stands). Use the following hardware NOT supplied by SAIC Exploranium (Typical per VPS bracket).

   a. S.S. 1/4 -20UNC Hex Bolt (1/2" long)
   b. S.S. 1/4" Lock Washers
   c. S.S. 1/4" Flat Washers
   d. Channel Nut (Unistrut P7006-1420EG).

5. Torque bolts to 72 in-lbs.

6. Mount each VPS to its support bracket. The Receivers (three wires) should be located on RSP 1 and the Transmitters (Emitters) (two wires) should be located on RSP 2 (as shown in Figure 2-13).

7. Route the VPS cables using cable ties attached to the Unistrut and support stand with the attaching hardware (Refer to Figure 2-12 and Table 2-2 for more information).

   Note: A typical configuration consists of six cable ties (three per side). Use the following hardware NOT supplied by SAIC Exploranium (Typical six places).

   a. S.S. 1/4 -20UNC Hex Bolt (5/8" long)
   b. S.S. 9/32" ID x 5/8" OD Flat Washers
   c. Channel Nut (Unistrut P7006-1420EG).

8. Torque bolts to 72 in-lbs.

9. The VPSs are connected to the RSP terminal board as shown in Section 3.1 – RPM8 System Interconnection.

   Note: Do not torque bolts that hold the support brackets until the VPSs have been aligned (see Section 2.3.9 - Alignment Procedure). Please consult the documentation that comes with your particular sensor for more detail on that product.

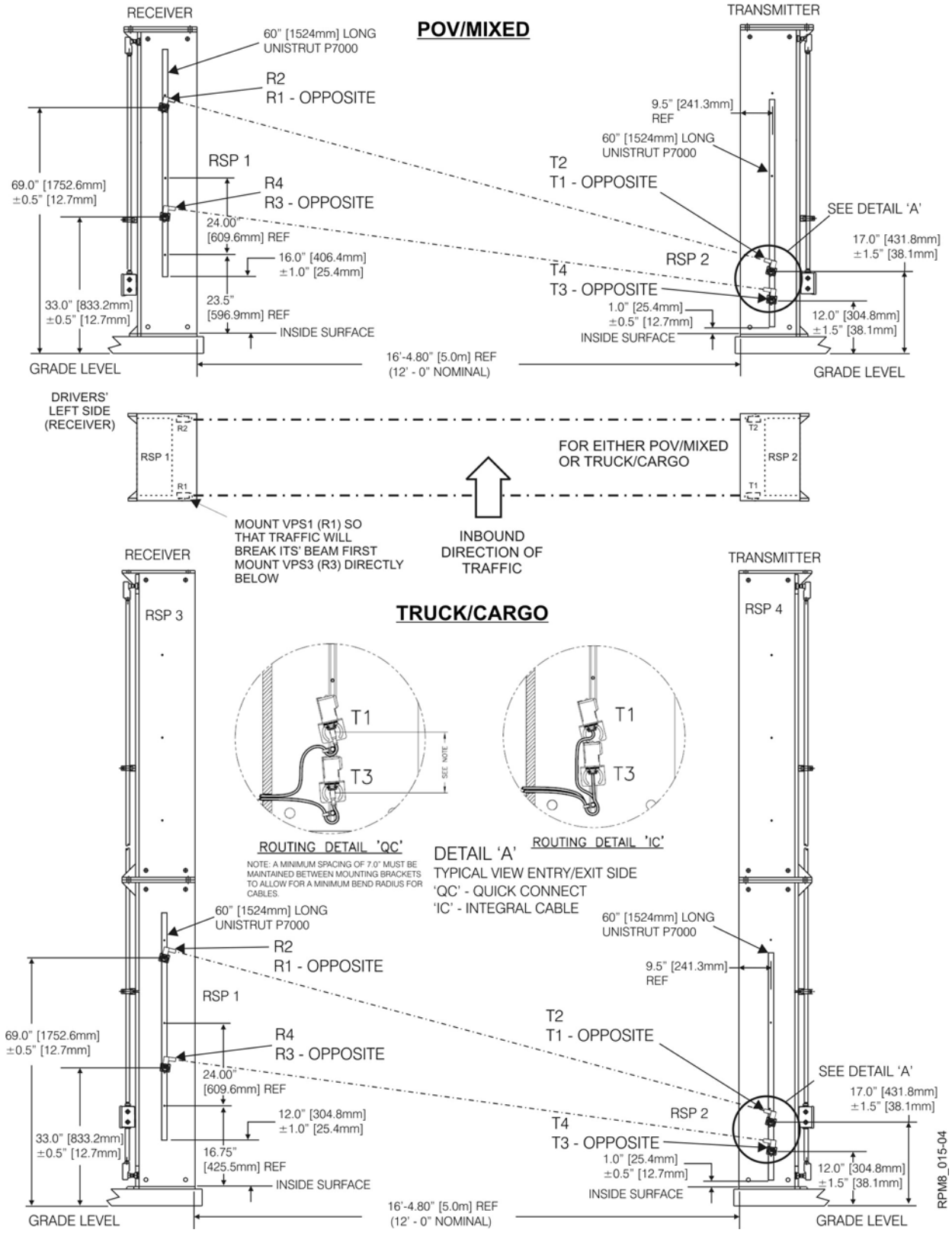

Figure 2-13 Sensor Mounting Positions

2.3.4 Conduit Installation

Note: All exposed conduit and fittings shall be NEMA 4 rated, Stainless Steel is preferred but Galvanized is an acceptable alternate. All buried conduit must comply with local codes, regulations and site requirements. SAIC Exploranium does NOT supply conduit and fittings.

Table 2-3 lists the type of conduit to be used and the location.

Table 2-3 – Conduit List

Service	Underground	Outside Above Ground	Inside Building
Power	PVC	RMC	EMT
Signal	PVC or PVC-RMC	RMC	EMT
Ethernet	PVC or PVC-RMC	RMC	None

- PVC = PVC plastic solvent glued
- PVC-RMC = Plastic coated rigid metallic conduit
- RMC = Rigid metallic conduit
- EMT = Electrical metallic tubing
- None = Conduit not required - cable trays preferred.

The routing of conduit and location of components described in this manual is presented as a preferred configuration. The installer may alter the configuration to suit the local conditions, site layout, and/or other considerations. It is critical, however, to maintain the NEMA 4 rating throughout the system.

2.3.4.1 Install the conduit supporting Unistrut

Install the conduit supporting Unistrut (Refer to Figure 2-14):

1. Attach the Unistrut (not supplied) across or along the back of each stand. Figure 2-14 shows an example of Unistrut installed across the back of the stand for either the POV Configuration or the Truck/Cargo Configuration.
2. Use the existing RSP detector mounting holes and hardware to install the Unistrut as shown.

   The Unistruts are fastened with the following existing hardware (typical 4 places):

   - One – 3/8” – 16 S.S. Hex Bolt
   - Two – S.S. Flat Washers
   - One – S.S. Lock Washer
   - One - 3/8” – 16 S.S. Hex Nut.

   Note: The Unistrut, and clamps shall be stainless steel, and are NOT supplied by SAIC Exploranium (Refer to Table 2-2 for hardware information).

2.3.4.2 Install Conduit (for POV and/or Truck/Cargo Configuration)

The conduit is designed for either the POV configuration or the Truck/Cargo configuration. Follow the particular instructions that pertain to you. Figure 2-15 shows the conduit designed for the left side (RSP1and/or 3) and Figure 2-16 shows the conduit designed for the right side (RSP2 and/or 4).

Note: The instructions below show a typical installation. If the customer chooses to install the components in a different location, refer to Table 3-1 for cable specifications and length constraints and Table 2-3 for the conduit list.

2.3.4.3 POV Configuration – Conduit Installation

For POV Configuration (Refer to Figure 2-15 and 2-16):

Note: Figure 2-15 shows the POV configuration and installation of conduit for RSP 1 with connections for the Battery Box, Control Box and Exterior Annunciator (if used or mounted in this location). Figure 2-16 shows the POV configuration and installation of conduit for RSP 2. (Also refer to Appendix A.5 Engineering Drawings for parts information; see engineering drawing No. 21350-1 for Type 1 Stands and No. 21352-1 for Type 2/3 Stands).

1. Make all conduit connections for RSP 1 and/or RSP 2 in accordance with Figures 2-15 and 2-16 respectively.

   Note: The following instructions are common to both RSP 1 and RSP 2 unless otherwise noted.

2. Attach the Rigid 1” LB per step 3 and 4, as shown in figure details.
3. Make connections to the 6” x 6” junction box with Rigid 1” hubs as shown in Figures 2-15 and 2-16 for either RSP 1 and RSP 2 respectively
4. Attach the Rigid 1” conduit to the Rigid 1” LB and the Unistrut with the Unistrut clamp and attaching hardware (provided with clamp) (See Figure 2-14).
5. For RSP 1 make connections to the Rigid 1” T Conduit Bodies, and Rigid 1” LL Conduit Body as shown in Figure 2-15 for connection to the Battery Box, Control Box and/or Exterior Annunciator (if used/or mounted in location) with Rigid 1” Hubs.

   Notes:

   - Use spray foam insulation to seal wiring in Rigid 1” Hubs at the Battery Box only. (See Figure 2-15).
   - If the Exterior Annunciator is not used or mounted in a different location the Rigid 1” LL Conduit Body is connected to the Control Box.

6. Bend the Rigid 1” conduit to suit connection to the 6” x 6” junction box for the VPS Cables and connect conduit to the junction box with Rigid 1” Hubs.
7. Install two Rigid 1” Cord Grips to the ends and apply silicon to the cord grip ends after cable is routed.

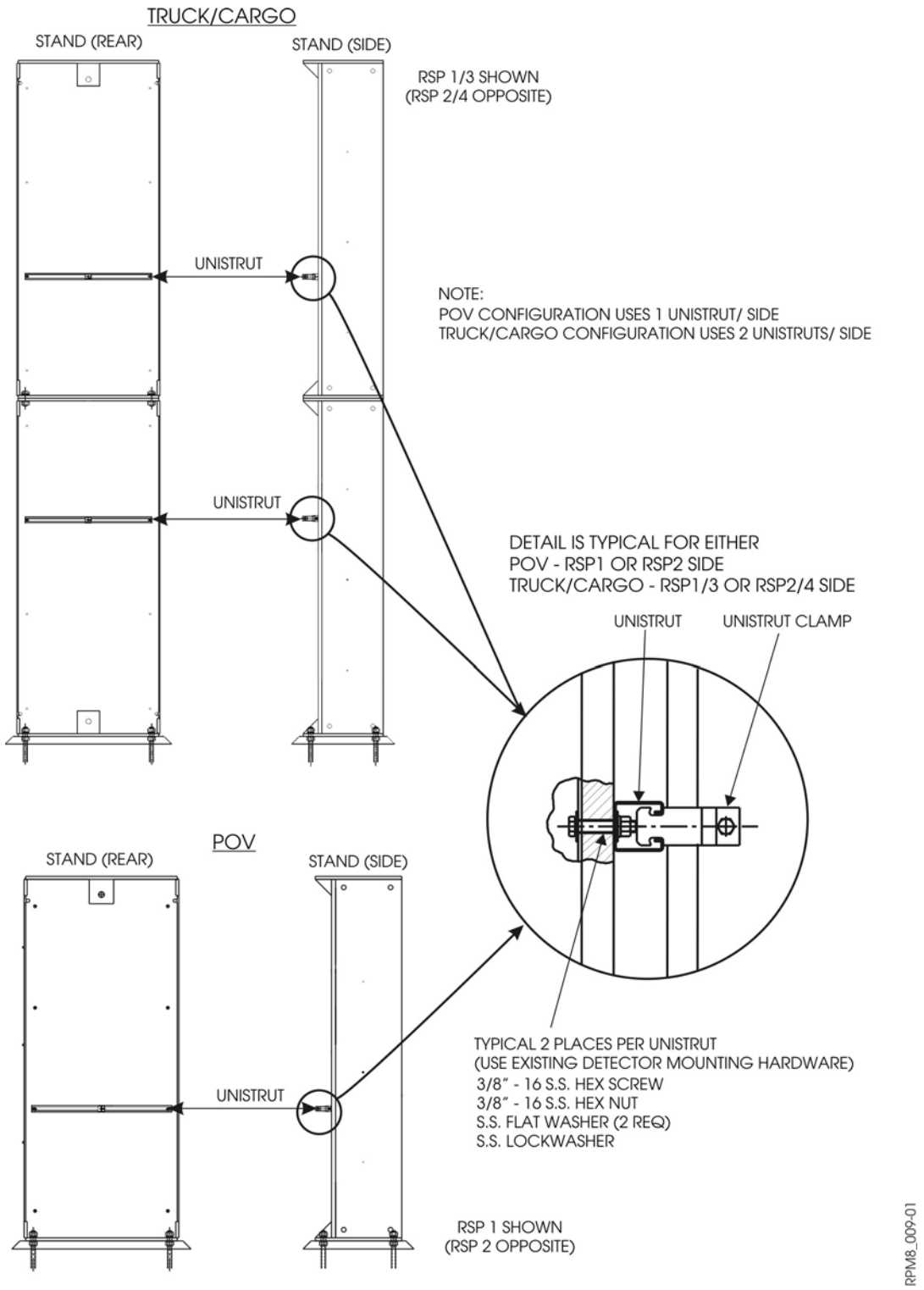

Figure 2-14 Conduit Installation (Unistrut and Clamp)

2.3.4.4 Truck/Cargo Configuration – Conduit Installation

For Truck/Cargo Configuration (Refer to Figure 2-15 and 2-16):

Note: Figure 2-15 shows the Truck/Cargo configuration and installation of conduit for RSP 1/3 combination with connections for the Battery Box, Control Box and Exterior Annunciator (if used or mounted in this location). Figure 2-16 shows the Truck/Cargo configuration and installation of conduit for RSP 2/4 combination. (Also refer to Appendix A.5 Engineering Drawings for parts information; see drawing PN 21350-1 for Type 1 Stands and PN 21352-1 for Type 2/3 Stands)

1. Make all conduit connections for RSP 1/3 and/or RSP 2/4 in accordance with Figures 2-15 and 2-16 respectively.

   Note: The following instructions are common to both RSP 1/3 and RSP 2/4 unless otherwise noted.

2. Attach the Rigid 1” LB per step 3 and 4, as shown in figure details to both upper and lower conduit access holes.
3. Make connections to the 6” x 6” junction box with Rigid 1” hubs as shown in Figures 2-15 and 2-16 for either RSP 1/3 and RSP 2/4 respectively
4. Attach the Rigid 1” conduit to the upper Rigid 1” LB and the Unistruts with the Unistrut clamps and attaching hardware (provided with clamps) (See Figure 2-14).
5. For RSP 1/3 make connections to the Rigid 1” T Conduit Bodies, and Rigid 1” LL Conduit Body as shown in Figure 2-15 for connection to the Battery Box, Control Box and/or Exterior Annunciator (if used/or mounted in location) with Rigid 1” Hubs.

   Notes:

   - Use spray foam insulation to seal wiring in Rigid 1” Hubs at the Battery Box only. (See Figure 2-15).
   - If the Exterior Annunciator is not used or mounted in a different location the Rigid 1” LL Conduit Body is connected to the Control Box.

6. Bend the Rigid 1” conduit to suit connection to the 6” x 6” junction box for the VPS Cables and connect conduit to the junction box with Rigid 1” Hubs.
7. Install two Rigid 1” Cord Grips to the ends and apply silicon to the cord grip ends after cable is routed.
8. Bend the Rigid 1” conduit to suit connection to the 6” x 6” junction box for the conduit connecting the opposite stand.

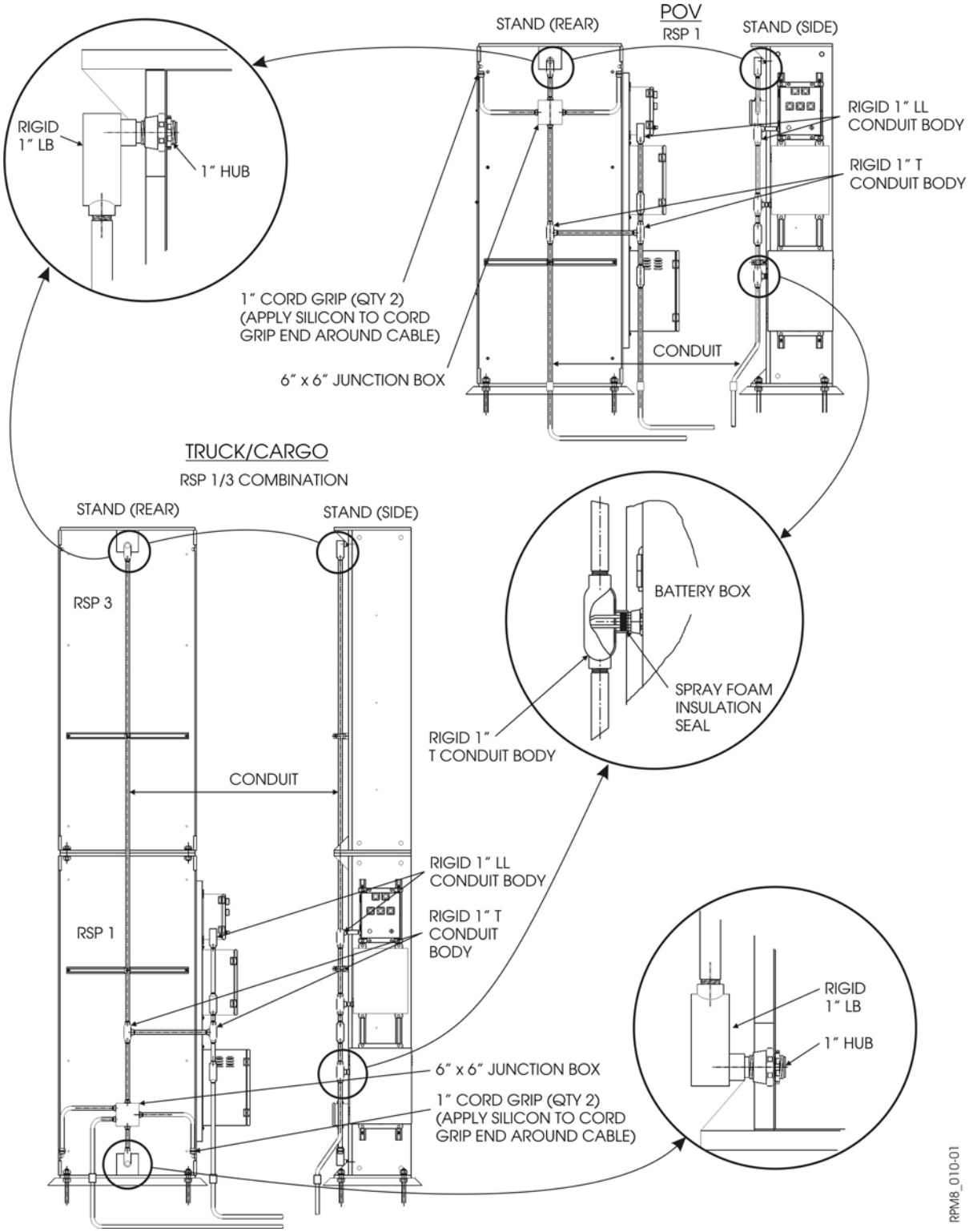

Figure 2-15 Conduit Installation (RSP 1/3 Truck/Cargo and RSP 1 POV Config.)

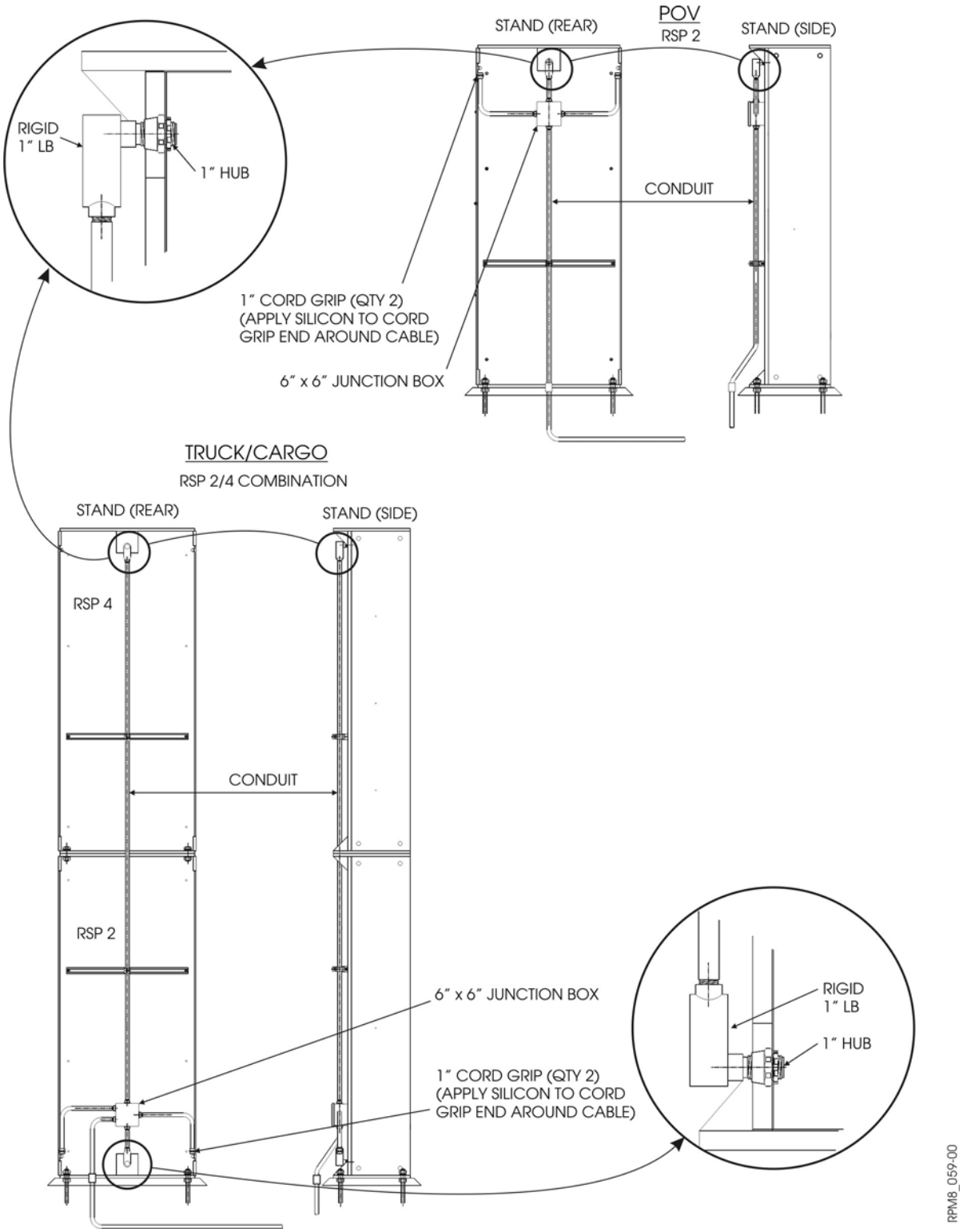

Figure 2-16 Conduit Installation (RSP 2/4 Truck/Cargo and RSP 2 POV Config.)

2.3.5 Control Box (CB), Battery Box, and Exterior Annunciator (ANE) Installation

2.3.5.1 Vertical Unistrut Installation

Install Vertical Unistruts:

Install the two supporting vertical Unistruts on the side of the support stand (RSP1) as follows:

Note: The locations given below are for general reference. The customer may modify the location of the components on the stand or elsewhere in accordance with their system design. If a location is chosen other than that illustrated in Figure 2-17, refer to Table 3-1 for cable specifications and design constraints.

1. Position the Unistruts and mark the location for the mounting holes (See Figure 2-17).
2. Drill three 1/2" diameter holes (typical 2 places) for the 3/8" diameter bolts (Refer to Figure 2-17 for location)

   Note: All mounting holes must be primed and painted with touchup paint (See Appendix C for Paint Procedure). (Also see Appendix A.5 Engineering Drawings for more information, No. 21350-1 for Type 1 Stands and No. 21352-1 for Type 2/3 Stands)

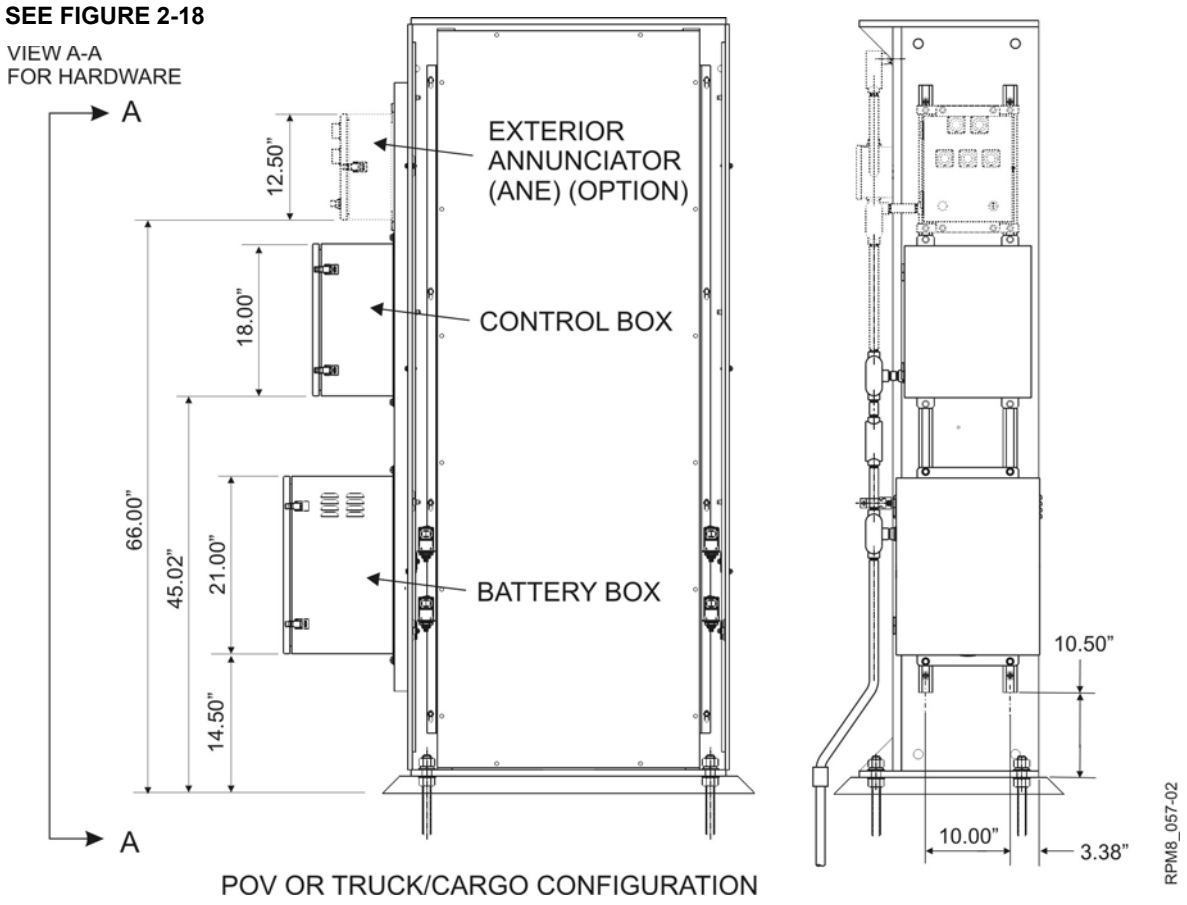

Figure 2-17 Component Installation (Mounting Dimensions)

3. Prepare the painted surfaces to be touched up in accordance with Appendix C Touching Up Painted Surfaces. Appendix C – specifies paint type to be used with Type 1 and Type 2/3 Support Stands.
4. Mount the Unistruts with the following hardware NOT supplied by SAIC Exploranium. (See Figure 2-18 and Table 2-2 for more information)
    - 3/8-16 S.S. Hex Bolt (1.1/4" Long)
    - S.S. Flat Washer
    - S.S. Lock Washer
    - 3/8-16 S.S. Hex Nut
5. Torque bolts to 228 in-lbs.

2.3.5.2 Battery Box Installation

Install the Battery Box:

1. Position the component according to dimensions given in Figure 2-17.
2. Position four Unistrut channel nuts to accommodate the CB.
3. Attach the component by its flanges to the Unistrut with the following hardware (Typical four places) (Refer to Figure 2-18 and Table 2-2 for more information).
    - 3/8-16 S.S. Hex Bolt (1/2" Long)
    - S.S. Flat Washer
    - S.S. Lock Washer
    - P1008U Channel Nut
4. Torque bolts to 228 in-lbs.

2.3.5.3 Control Box (CB) Installation

Install the Control Box (CB):

5. Repeat the above steps 1 thru 4 for the Control Box.

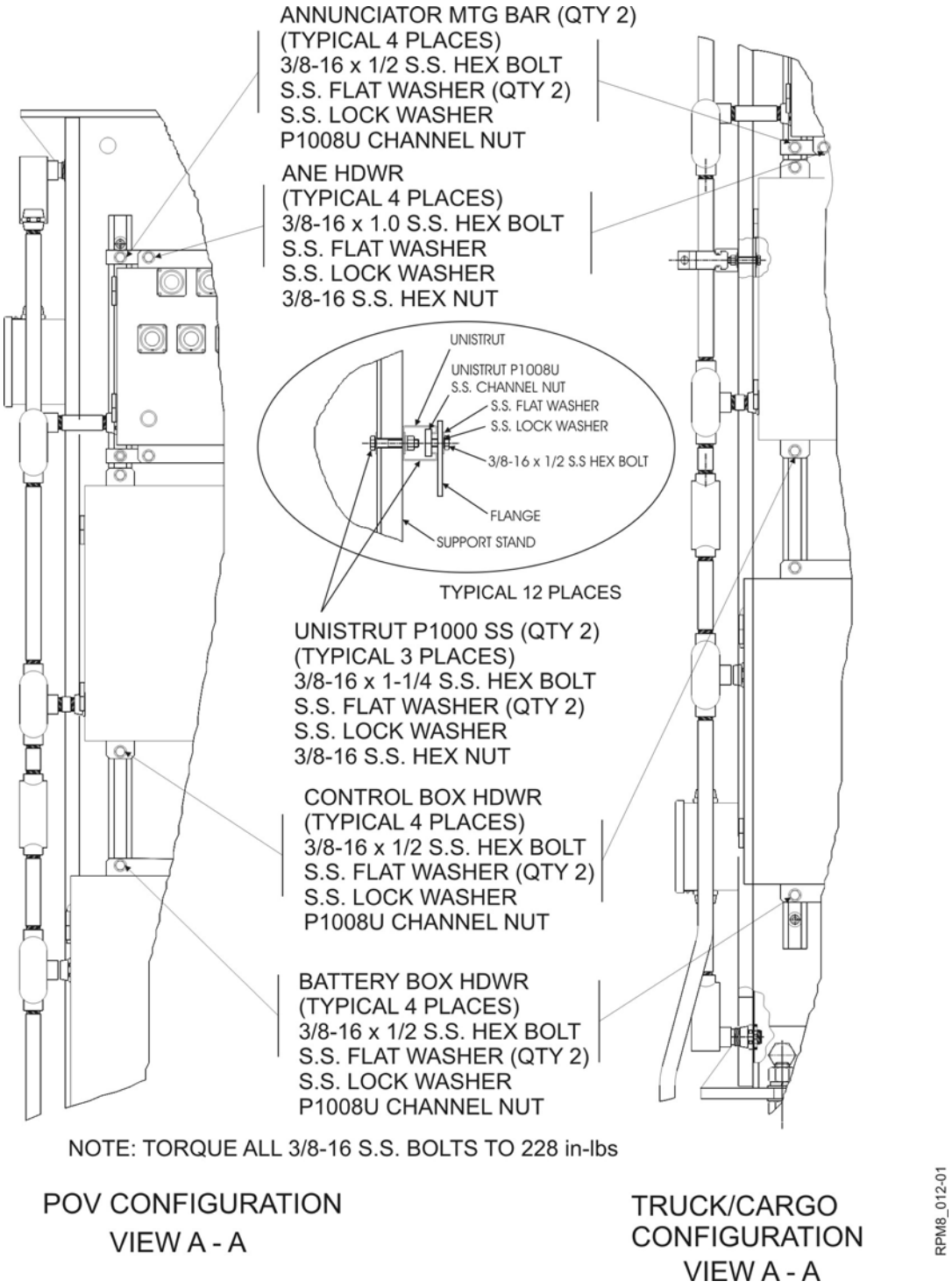

Figure 2-18 Control Box, Battery Box and Exterior Annunciator Installation

Note: The locations given above are for general reference. The customer can modify the location of the components on the stand or elsewhere.

2.3.5.4 Exterior Annunciator (ANE) Installation

Install the Exterior Annunciator (ANE):

Note: Refer to Figure 2-19 for dimensions to fabricate the Exterior Annunciator Mounting Bracket from Stainless Steel.

6. Repeat the above steps 1 thru 4 to mount the Exterior Annunciator Brackets (Qty 2) if the ANE is used or mounted in this location. (Refer to Figure 2-17)

   Note: Use the following hardware NOT supplied by SAIC Exploranium (Typical four places) (Refer to Figure 2-18 and Table 2-2 for more information):

   - 3/8-16 S.S. Hex Bolt (1/2" Long)
   - S.S. Flat Washer
   - S.S. Lock Washer
   - P1008U Channel Nut

7. Attach the Exterior Annunciator by its flanges to the brackets with the following hardware NOT supplied by SAIC Exploranium (Refer to Figure 2-18 and Table 2-2 for more information):

   - 3/8-16 S.S. Hex Bolt (1.0" Long)
   - S.S. Flat Washer
   - S.S. Lock Washer
   - 3/8-16 S.S. Hex Nut

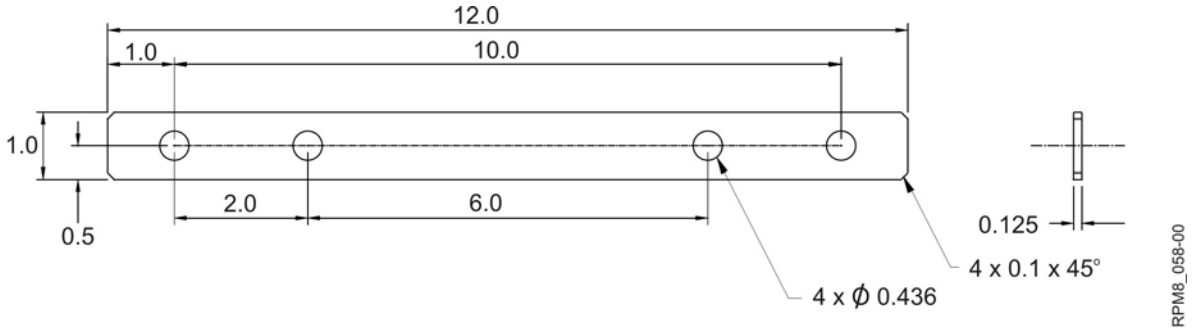

Figure 2-19 Annunciator Mounting Bar Dimensions

2.3.6 Ground loop Installation

Note: Equipment NOT supplied by SAIC Exploranium.

Outputs for a ground loop are provided on the CB TRM (Termination) CCA in the CB. The Ground Loop is not supplied with the RPM8 hardware and should be installed according to the instructions in the associated vendor manual.

2.3.7 Traffic Light Controller (TLC) Installation

Note: Equipment NOT supplied by SAIC Exploranium.

Outputs for the Traffic Light Controller (TLC) are provided on the RPM TRM (Termination) CCA in the CB. The TLC is not supplied with the RPM8 hardware and should be installed according to the instructions in the associated vendor manual.

2.3.8 Annunciator Installation

The Interior Annunciator assembly should be installed in the Operator's booth.

Install the Interior Annunciator:

1. Mark the location for the two mounting screws using the pattern, (Refer to Figure 2-20) on the wall of the booth.
2. Install the mounting screws.
3. Fit the two keyholes located on the back of the Interior Annunciator (as shown in Figure 2-20) over the two screws.

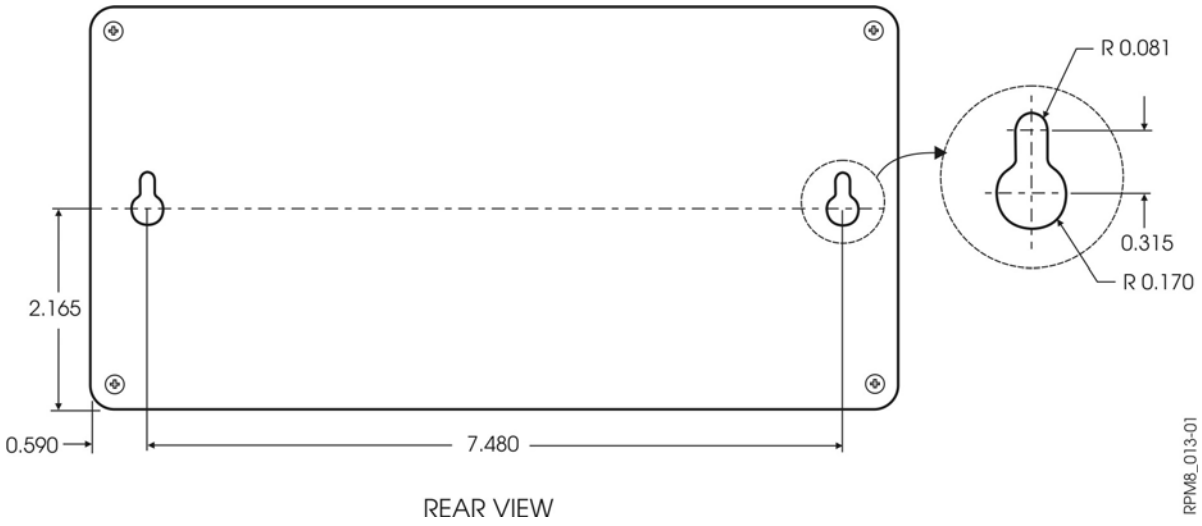

Figure 2-20 Interior Annunciator Mounting Hole Pattern

The Exterior Annunciator (ANE) assembly is an option and can either be mounted to the left side of RSP 1 or in a location to suit the customer. Refer to Section 2.3.4 Control Box (CB), Battery Box, and Exterior Annunciator (ANE) Installation to install the Exterior Annunciator to the RSP 1.

2.3.8.1 Install ANE in a Different Location:

The Exterior Annunciator (ANE) assembly is an option and can either be mounted to the left side of RSP 1 or in a location to suit the customer needs. Refer to Section 2.3.5.4 Exterior Annunciator (ANE) Installation to install the Exterior Annunciator to the RSP 1.

To install the ANE in a location other than the left side of RSP 1:

1. Position the ANE in a suitable location and use the bolt pattern (See Figure 2-21) to locate the bolt holes.
2. Install the ANE with attaching hardware (See Table 2-2 for more information), in accordance with the bolt pattern as shown below.

   Note: Use the following hardware not supplied with the RPM8:

- Four – 3/8-16 S.S. Hex Bolts (1.0” Long)
- Four – S.S. Flat Washers
- Four – S.S. Lock Washers
- Four – 3/8-16 S.S. Hex Nuts

3. Torque bolts to 228 in-lbs.

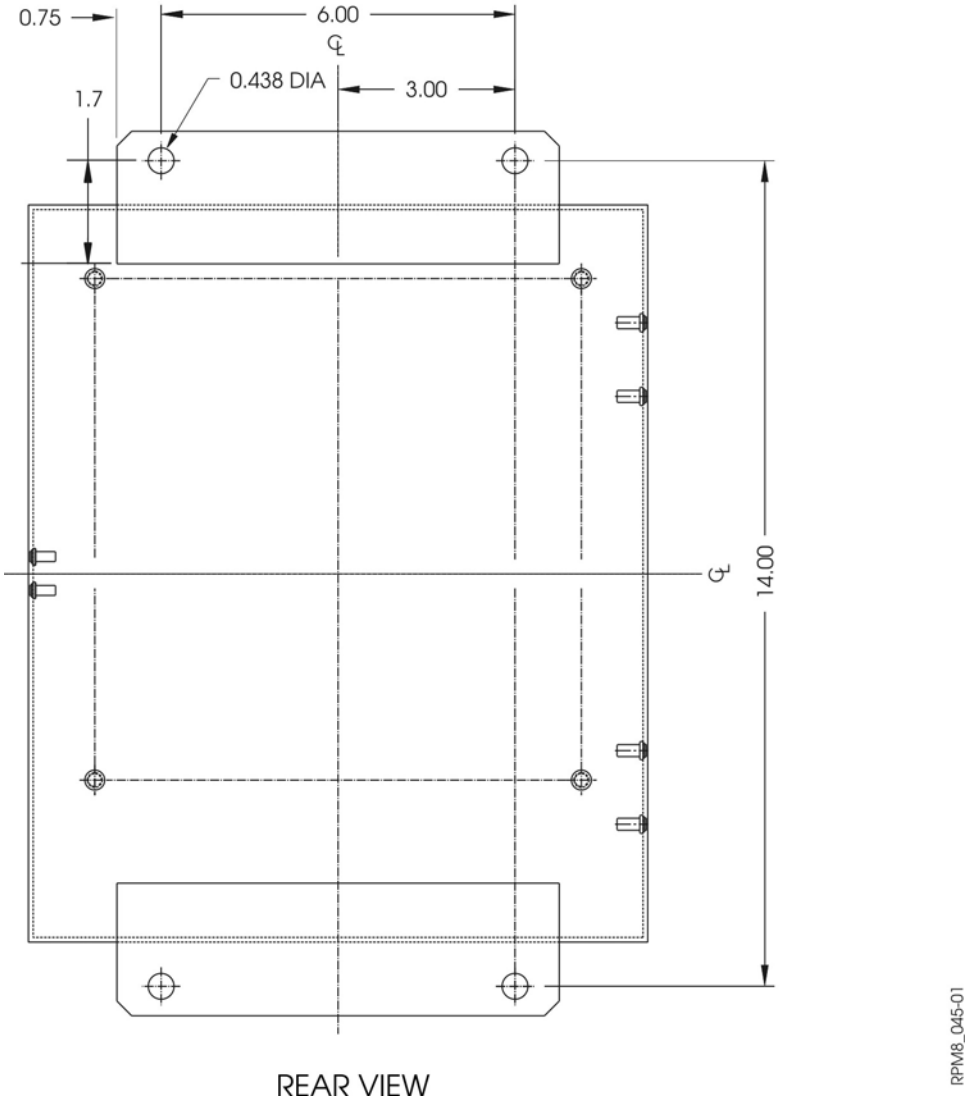

Figure 2-21 Exterior Annunciator Bolt Pattern

2.3.9 Alignment Procedure for the VPS

Note: If any VPS should become misaligned, it will usually be indicated by the RSP and shown as a vehicle timeout or system failure even though no vehicle will actually be present in the RSP. Use the following procedure to re-align the VPS.

2.3.9.1 VPS Initial Alignment

Initial Alignment Procedure:

1. Loosen the bolts holding the VPS brackets to the Unistrut.
2. Slide the VPS brackets along the Unistrut rail until the optical center of each transmitter and receiver is at the correct height above the road grade as indicated in Figure 2-22 (also refer to Figure 2-13 for dimensions).
3. While the mounting bolts are loose, install the Light Shields onto the VPS Receivers (R1 thru R4) only. Clip Light Shield as shown (TOP is marked) refer to figure Light Shield Assembly.
4. Initially carry out a coarse alignment to sight the transmitter and receiver by rotating the optical sensors and/or supporting brackets.
5. Do not completely tighten the mounting bolts.

   Note: Accurate alignment can only be accomplished with the system powered up. When power is available complete the following procedure to correctly align the VPS.

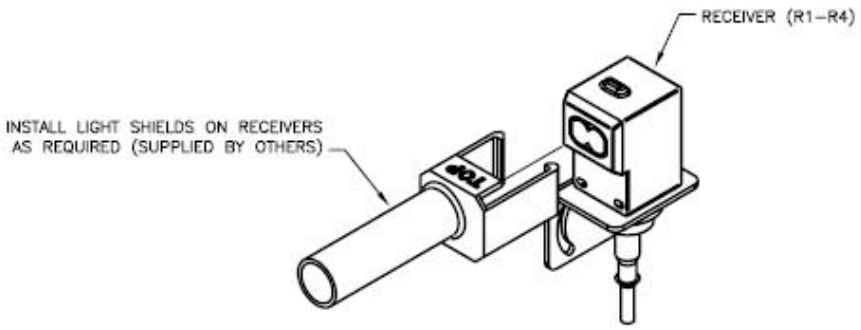

LIGHT SHIELD ASSEMBLY

2.3.9.2 VPS Final Alignment

Final Alignment Procedure (after system power-up):

1. Rotate the Emitter (Transmitter) up or down and right or left and align receiver to transmitter sensors as indicated by VPS mounting positions figure above. As the sensors become better aligned, the Red LED strobes at a faster rate as shown in the figure to the right.
2. Continue rotating the sensor to the point where the Red LED strobes at its fastest rate. This indicates the best possible alignment.
3. When alignment is achieved, torque bolts attaching the VPS bracket to 72 in-lbs.

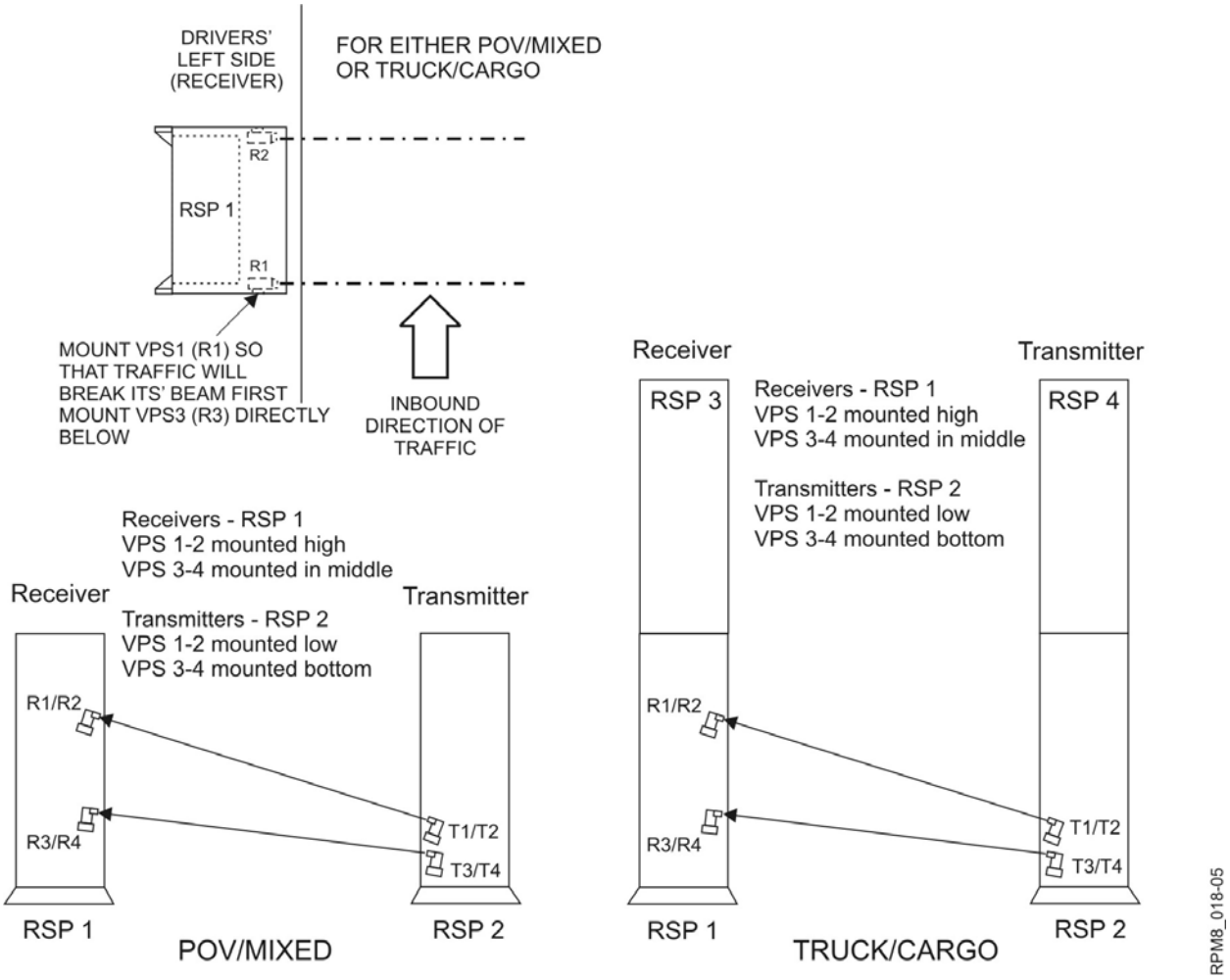

Figure 2-22 VPS Alignment Diagram

3.0 System Wiring

3.1 RPM8 System Interconnection

Figure 3-1 shows how the RPM8 system components are connected for a two RSP (POV configuration) system, Figure 3-2 shows how the RPM8 system components are connected for a four RSP (Truck/Cargo configuration) system, and Figure 3-3 shows how the RPM8 system components are connected for an eight RSP (Truck/Cargo configuration) system. The basic cable routing between the RSP 1 (ODD) and the Control Box, RSP 2 (EVEN) and the Control Box and then from the Control Box to all the other ancillary equipment remains the same for all configurations. Additional RSPs are connected to the system by connecting the terminal blocks (TB1 and TB2) of each RSP TRM CCA together into two branches ODD (ie. RSP1, 3 up to 15) and EVEN (ie. RSP2, 4 up to 16).

Refer to Table 3-1 for cable specifications and cable length restrictions. Actual cable length limits can be calculated for different site layouts using the current draw and maximum allowable voltage drop data as shown in Table 3-1. Varying the gauge wire segments will maximize the cable length limits.

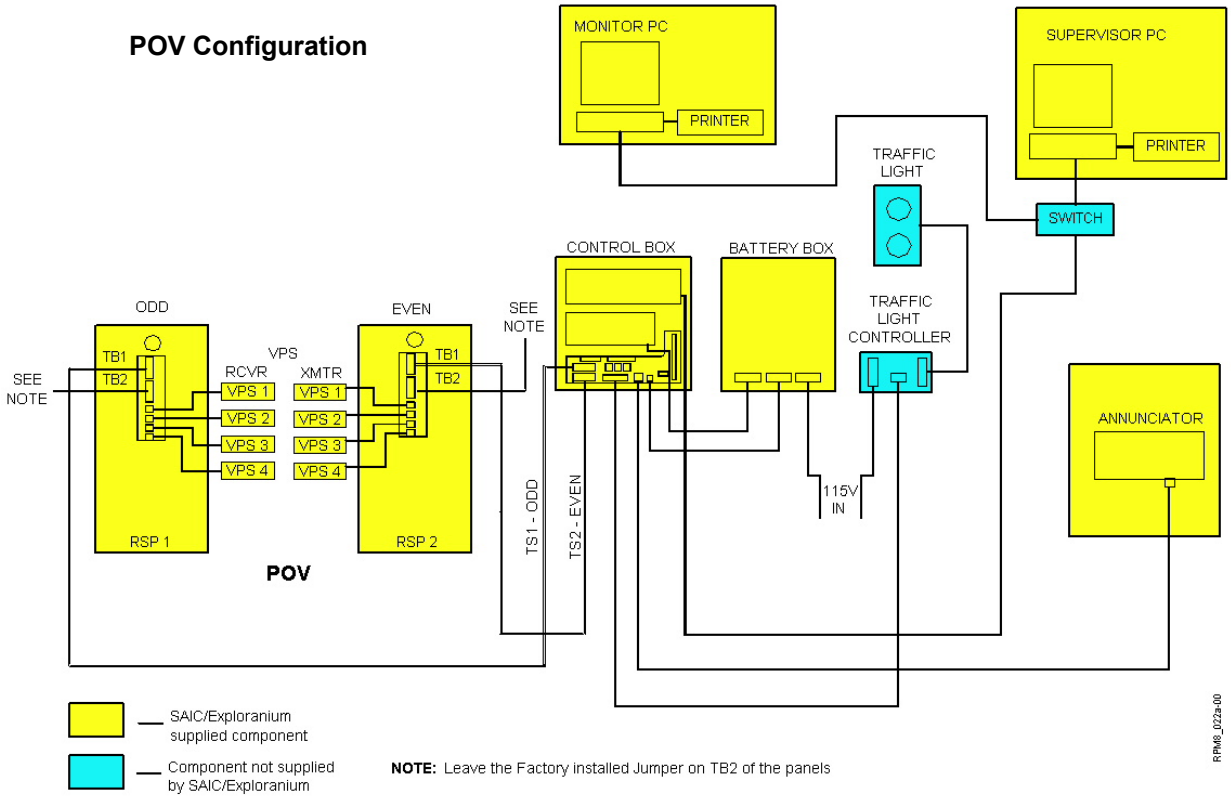

Figure 3-1 RPM8 System Interconnection Diagram (Two RSP System)

Truck/Cargo Configuration

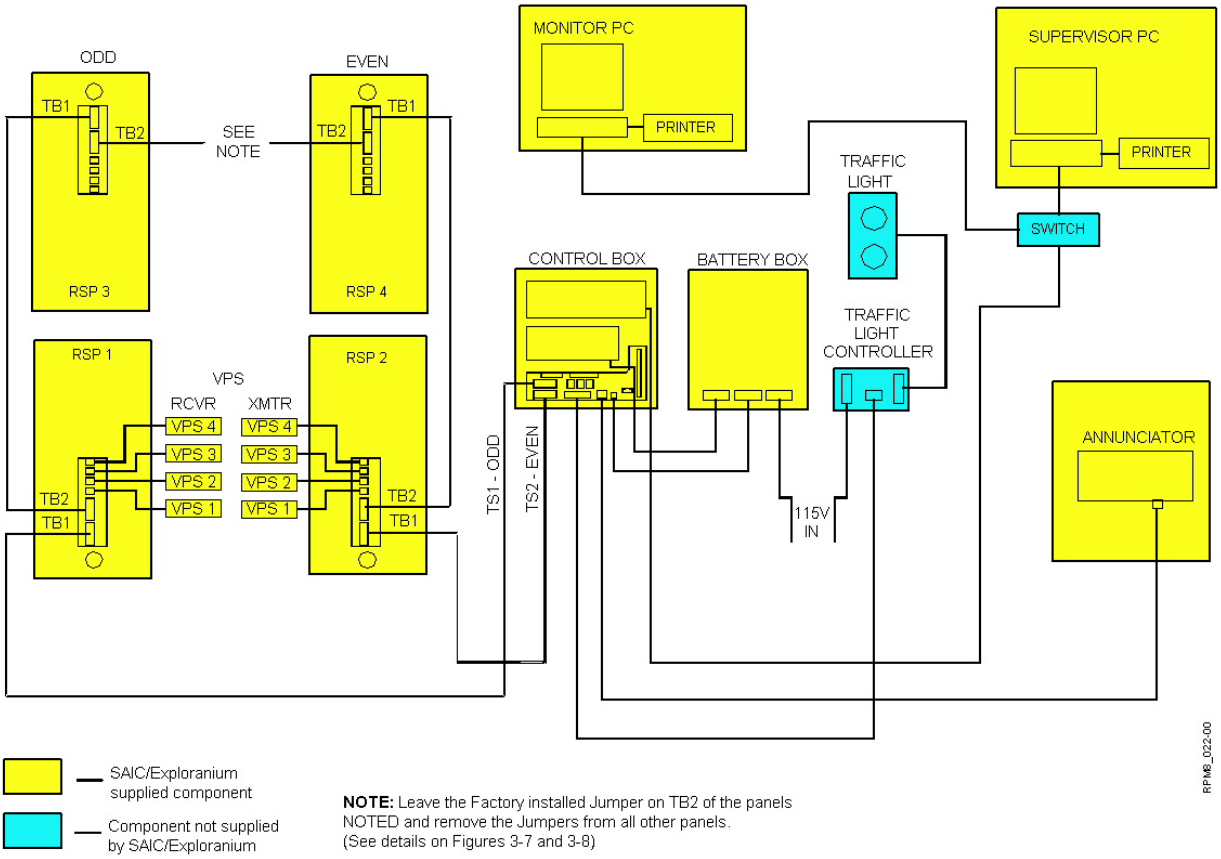

Figure 3-2 RPM8 System Interconnection Diagram (Four RSP System)

Truck/Cargo Configuration

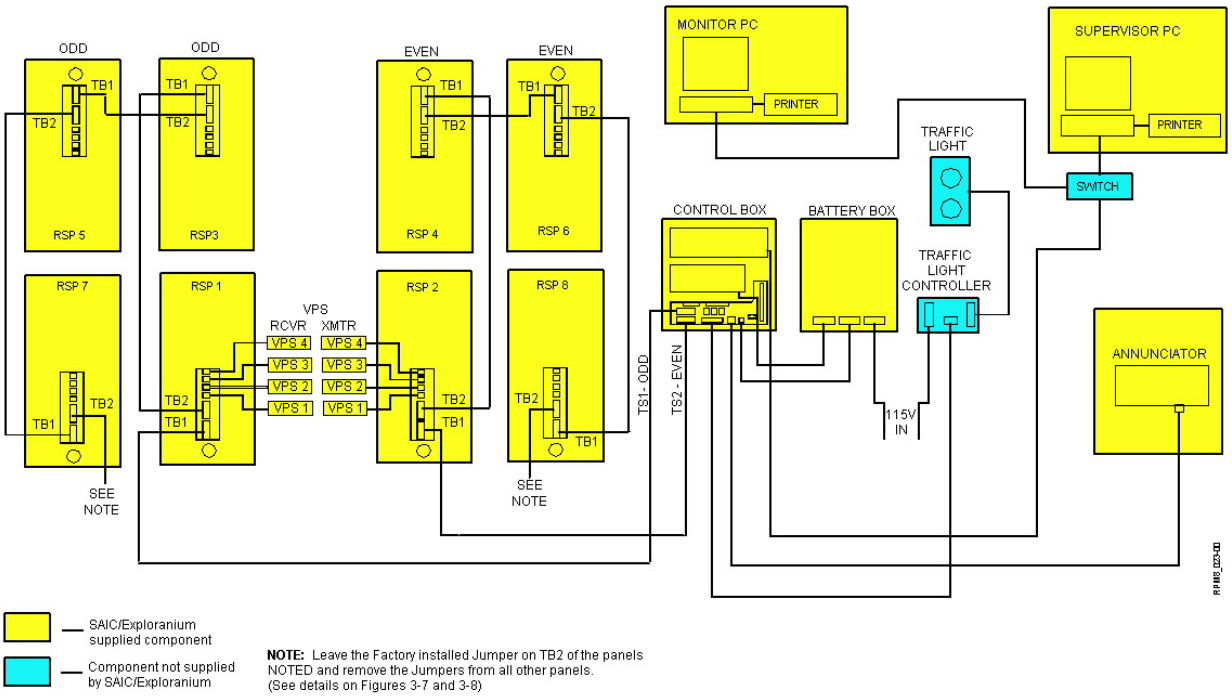

Figure 3-3 RPM8 System Interconnection Diagram (Eight RSP System)

Table 3-1 – Cable List (Major System Component Connections)

FROM	TO	SPECIFICATION	MAX LENGTH	MAX ALLOWABLE VOLTAGE DROP	MAX CURRENT DRAW
AWG 22/ 4 PAIR CABLE, Resistance; 0.0529 Ω/m					
CB	RSP1	EIGHT CONDUCTOR, 4 TWISTED PAIR, 22AWG, SHIELDED (SHIELD CONNECTED BOTH ENDS), *** See RSP NOTES for cable specs and jacket type**	460ft (140m)	2V	0.25 A
CB	RSP1 THRU 3 (RSP2 THRU 4)	EIGHT CONDUCTOR, 4 TWISTED PAIR, 22AWG, SHIELDED (SHIELD CONNECTED BOTH ENDS), *** See RSP NOTES for cable specs and jacket type**	230 ft (70m)	2V AT LAST RSP	0.25 A/RSP 0.5A at CB
CB	RSP1THRU 5 (RSP2 THRU 6)	EIGHT CONDUCTOR, 4 TWISTED PAIR, 22AWG, SHIELDED (SHIELD CONNECTED BOTH ENDS), *** See RSP NOTES for cable specs and jacket type**	150 ft (46m)	2V AT LAST RSP	0.25 A/RSP 0.75A at CB
CB	RSP1 THRU 7 (RSP2 THRU 8)	EIGHT CONDUCTOR, 4 TWISTED PAIR, 22AWG, SHIELDED (SHIELD CONNECTED BOTH ENDS), *** See RSP NOTES for cable specs and jacket type**	115 ft (35m)	2V AT LAST RSP	0.25 A/RSP 1.0A at CB
CB	RSP1 THRU 9 (RSP2 THRU 10)	EIGHT CONDUCTOR, 4 TWISTED PAIR, 22AWG, SHIELDED (SHIELD CONNECTED BOTH ENDS), *** See RSP NOTES for cable specs and jacket type**	92 ft (28m)	2V AT LAST RSP	0.25 A/RSP 1.25A at CB
CB	RSP1 THRU 11 (RSP2 THRU 12)	EIGHT CONDUCTOR, 4 TWISTED PAIR, 22AWG, SHIELDED (SHIELD CONNECTED BOTH ENDS), *** See RSP NOTES for cable specs and jacket type**	75 ft (23m)	2V AT LAST RSP	0.25 A/RSP 1.5A at CB
CB	RSP1 THRU 13 (RSP2 THRU 14)	EIGHT CONDUCTOR, 4 TWISTED PAIR, 22AWG, SHIELDED (SHIELD CONNECTED BOTH ENDS), *** See RSP NOTES for cable specs and jacket type**	66 ft (20m)	2V AT LAST RSP	0.25 A/RSP 1.75A at CB
CB	RSP1 THRU 15 (RSP2 THRU 16)	EIGHT CONDUCTOR, 4 TWISTED PAIR, 22AWG, SHIELDED (SHIELD CONNECTED BOTH ENDS), *** See RSP NOTES for cable specs and jacket type**	59 ft (18m)	2V AT LAST RSP	0.25 A/RSP 2.0A at CB

FROM	TO	SPECIFICATION	MAX LENGTH	MAX ALLOWABLE VOLTAGE DROP	MAX CURRENT DRAW
AWG 20/ 4 PAIR CABLE, Resistance; 0.0333 Ω/m					
CB	RSP1	EIGHT CONDUCTOR, 4 TWISTED PAIR, 20AWG, SHIELDED (SHIELD CONNECTED BOTH ENDS), *** See RSP NOTES for cable specs and jacket type**	689 ft (210m)	2V	0.25 A
CB	RSP1 THRU 3 (RSP2 THRU 4)	EIGHT CONDUCTOR, 4 TWISTED PAIR, 20AWG, SHIELDED (SHIELD CONNECTED BOTH ENDS), *** See RSP NOTES for cable specs and jacket type**	344 ft (105m)	2V AT LAST RSP	0.25 A/RSP 0.5A at CB
CB	RSP1THRU 5 (RSP2 THRU 6)	EIGHT CONDUCTOR, 4 TWISTED PAIR, 20AWG, SHIELDED (SHIELD CONNECTED BOTH ENDS), *** See RSP NOTES for cable specs and jacket type**	226 ft (69m)	2V AT LAST RSP	0.25 A/RSP 0.75A at CB
CB	RSP1 THRU 7 (RSP2 THRU 8)	EIGHT CONDUCTOR, 4 TWISTED PAIR, 20AWG, SHIELDED (SHIELD CONNECTED BOTH ENDS), *** See RSP NOTES for cable specs and jacket type**	174 ft (53m)	2V AT LAST RSP	0.25 A/RSP 1.0A at CB
CB	RSP1 THRU 9 (RSP2 THRU 10)	EIGHT CONDUCTOR, 4 TWISTED PAIR, 20AWG, SHIELDED (SHIELD CONNECTED BOTH ENDS), *** See RSP NOTES for cable specs and jacket type**	138 ft (42m)	2V AT LAST RSP	0.25 A/RSP 1.25A at CB
CB	RSP1 THRU 11 (RSP2 THRU 12)	EIGHT CONDUCTOR, 4 TWISTED PAIR, 20AWG, SHIELDED (SHIELD CONNECTED BOTH ENDS), *** See RSP NOTES for cable specs and jacket type**	115 ft (35m)	2V AT LAST RSP	0.25 A/RSP 1.5A at CB
CB	RSP1 THRU 13 (RSP2 THRU 14)	EIGHT CONDUCTOR, 4 TWISTED PAIR, 20AWG, SHIELDED (SHIELD CONNECTED BOTH ENDS), *** See RSP NOTES for cable specs and jacket type**	98 ft (30m)	2V AT LAST RSP	0.25 A/RSP 1.75A at CB
CB	RSP1 THRU 15 (RSP2 THRU 16)	EIGHT CONDUCTOR, 4 TWISTED PAIR, 20AWG, SHIELDED (SHIELD CONNECTED BOTH ENDS), *** See RSP NOTES for cable specs and jacket type**	89 ft (27m)	2V AT LAST RSP	0.25 A/RSP 2.0A at CB

FROM	TO	SPECIFICATION	MAX LENGTH	MAX ALLOWABLE VOLTAGE DROP	MAX CURRENT DRAW
AWG 18/ 4 PAIR CABLE, Resistance; 0.0209 Ω/m					
CB	RSP1	EIGHT CONDUCTOR, 4 TWISTED PAIR, 18AWG, SHIELDED (SHIELD CONNECTED BOTH ENDS), *** See RSP NOTES for cable specs and jacket type**	1093 ft (333m)	2V	0.25 A
CB	RSP1 THRU 3 (RSP2 THRU 4)	EIGHT CONDUCTOR, 4 TWISTED PAIR, 18AWG, SHIELDED (SHIELD CONNECTED BOTH ENDS), *** See RSP NOTES for cable specs and jacket type**	548 ft (167m)	2V AT LAST RSP	0.25 A/RSP 0.5A at CB
CB	RSP1THRU 5 (RSP2 THRU 6)	EIGHT CONDUCTOR, 4 TWISTED PAIR, 18AWG, SHIELDED (SHIELD CONNECTED BOTH ENDS), *** See RSP NOTES for cable specs and jacket type**	358 ft (109m)	2V AT LAST RSP	0.25 A/RSP 0.75A at CB
CB	RSP1 THRU 7 (RSP2 THRU 8)	EIGHT CONDUCTOR, 4 TWISTED PAIR, 18AWG, SHIELDED (SHIELD CONNECTED BOTH ENDS), *** See RSP NOTES for cable specs and jacket type**	272 ft (83m)	2V AT LAST RSP	0.25 A/RSP 1.0A at CB
CB	RSP1 THRU 9 (RSP2 THRU 10)	EIGHT CONDUCTOR, 4 TWISTED PAIR, 18AWG, SHIELDED (SHIELD CONNECTED BOTH ENDS), *** See RSP NOTES for cable specs and jacket type**	220 ft (67m)	2V AT LAST RSP	0.25 A/RSP 1.25A at CB
CB	RSP1 THRU 11 (RSP2 THRU 12)	EIGHT CONDUCTOR, 4 TWISTED PAIR, 18AWG, SHIELDED (SHIELD CONNECTED BOTH ENDS), *** See RSP NOTES for cable specs and jacket type**	180 ft (55m)	2V AT LAST RSP	0.25 A/RSP 1.5A at CB
CB	RSP1 THRU 13 (RSP2 THRU 14)	EIGHT CONDUCTOR, 4 TWISTED PAIR, 18AWG, SHIELDED (SHIELD CONNECTED BOTH ENDS), *** See RSP NOTES for cable specs and jacket type**	157 ft (48m)	2V AT LAST RSP	0.25 A/RSP 1.75A at CB
CB	RSP1 THRU 15 (RSP2 THRU 16)	EIGHT CONDUCTOR, 4 TWISTED PAIR, 18AWG, SHIELDED (SHIELD CONNECTED BOTH ENDS), *** See RSP NOTES for cable specs and jacket type**	141 ft (43m)	2V AT LAST RSP	0.25 A/RSP 2.0A at CB

FROM	TO	SPECIFICATION	MAX LENGTH	MAX ALLOWABLE VOLTAGE DROP	MAX CURRENT DRAW
***RSP NOTES:** 1. "MAX LENGTH" represents the total cable length from the CB to the last RSP in series, (ie. ODD – CB to RSP1 to RSP3 to RSP5 etc., and EVEN – CB to RSP2 to RSP4 to RSP6, etc.). The CB is connected to the first RSP on the ODD (RSP1) and EVEN (RSP2) series. 2. We recommend using Outdoor Rated cables with Direct Burial Jackets for routing through underground conduit. (Cable with Plenum Rated jackets are not recommended for routing through underground conduit). 3. In situations where cables are routed through above ground conduit, you may consider the use of cable with Plenum Rated jackets. 4. Suggested cable options for RSPs are as follows: • Alpha 35484 (direct burial) or equivalent • Belden YR44768 (direct burial) or equivalent. • Alpha 2214C (Plenum Jacket) or equivalent. 5. Contact the cable manufacturer for recommended cable parameters applicable to the specific site requirements and compliant with the local code.					
AWG 22/ 4 PAIR CABLE, Resistance; 0.0529 Ω/m **(For Interior Annunciator (ANI))**					
CB	ANI1	EIGHT CONDUCTOR, 4 TWISTED PAIR, 22AWG, SHIELDED (SHIELD CONNECTED BOTH ENDS), *** See ANI NOTES for cable specs and jacket type**	985 ft (300m)	4V	0.25 A
CB	ANI1 THRU 2	EIGHT CONDUCTOR, 4 TWISTED PAIR, 22AWG, SHIELDED (SHIELD CONNECTED BOTH ENDS), *** See ANI NOTES for cable specs and jacket type**	492 ft (150m)	4V AT LAST ANI	0.25 A/ANI 0.5A at CB
CB	ANI1THRU 3	EIGHT CONDUCTOR, 4 TWISTED PAIR, 22AWG, SHIELDED (SHIELD CONNECTED BOTH ENDS), *** See ANI NOTES for cable specs and jacket type**	328 ft (100m)	4V AT LAST ANI	0.25 A/ANI 0.75A at CB
CB	ANI1 THRU 4	EIGHT CONDUCTOR, 4 TWISTED PAIR, 22AWG, SHIELDED (SHIELD CONNECTED BOTH ENDS), *** See ANI NOTES for cable specs and jacket type**	247 ft (75m)	4V AT LAST ANI	0.25 A/ANI 1.0A at CB
CB	ANI1 THRU 5	EIGHT CONDUCTOR, 4 TWISTED PAIR, 22AWG, SHIELDED (SHIELD CONNECTED BOTH ENDS), *** See ANI NOTES for cable specs and jacket type**	198 ft (60m)	4V AT LAST ANI	0.25 A/ANI 1.25A at CB

FROM	TO	SPECIFICATION	MAX LENGTH	MAX ALLOWABLE VOLTAGE DROP	MAX CURRENT DRAW
CB	ANI1 THRU 6	EIGHT CONDUCTOR, 4 TWISTED PAIR, 22AWG, SHIELDED (SHIELD CONNECTED BOTH ENDS), *** See ANI NOTES for cable specs and jacket type**	165 ft (50m)	4V AT LAST ANI	0.25 A/ANI 1.5A at CB

***ANI NOTES:**

1. "MAX LENGTH" represents the total cable length from the CB to the last ANI in series, (ie. CB to ANI1 to ANI2 to ANI3 etc.). The CB is connected to the first Annunciator.
2. We recommend using Outdoor Rated cables with Direct Burial Jackets for routing through underground conduit. (Cable with Plenum Rated jackets are not recommended for routing through underground conduit).
3. Suggested cable options for ANIs using underground conduit are as follows:
   - Alpha 35484 (direct burial) or equivalent.

   Note: When considering cable specs for the Annunciator, the maximum diameter of the cable cannot exceed the ID of the ANI grommet (max dia. = 7mm).
4. In situations where cables are routed through above ground conduit, you may consider the use of cable with Plenum Rated jackets ie. Alpha 2214C or equivalent.
5. In situations where the Interior Annunciator is located inside a building, please refer to code requirements for the transition of direct-buried cable to plenum-rated cable, and make necessary cable splices and proper conduit routing.

AWG 22/ 4 PAIR CABLE, Resistance; 0.0529 Ω/m (For Exterior Annunciator (Option))					
CB	ANE1	EIGHT CONDUCTOR, 4 TWISTED PAIR, 22AWG, SHIELDED (SHIELD CONNECTED BOTH ENDS), *** See ANE NOTES for cable specs and jacket type**	354 ft (108m)	4V	0.7 A
CB	ANE1 THRU 2	EIGHT CONDUCTOR, 4 TWISTED PAIR, 22AWG, SHIELDED (SHIELD CONNECTED BOTH ENDS), *** See ANE NOTES for cable specs and jacket type**	177 ft (54m)	4V AT LAST ANE	0.7 A/ANE 1.4A at CB
AWG 20/ 4 PAIR CABLE, Resistance; 0.0333 Ω/m (For Exterior Annunciator (Option))					
CB	ANE1	EIGHT CONDUCTOR, 4 TWISTED PAIR, 20AWG, SHIELDED (SHIELD CONNECTED BOTH ENDS), *** See ANE NOTES for cable specs and jacket type**	560 ft (170m)	4V	0.7 A
CB	ANE1 THRU 2	EIGHT CONDUCTOR, 4 TWISTED PAIR, 20AWG, SHIELDED (SHIELD CONNECTED BOTH ENDS), *** See ANE NOTES for cable specs and jacket type**	280 ft (85m)	4V AT LAST ANE	0.7 A/ANE 1.4A at CB

FROM	TO	SPECIFICATION	MAX LENGTH	MAX ALLOWABLE VOLTAGE DROP	MAX CURRENT DRAW

*** ANE NOTES - OPTIONAL:**

1. "MAX LENGTH" represents the total cable length from the CB to the last ANE in series, (ie. CB to ANE1 to ANE2). The CB is connected to the first Annunciator.
2. We recommend using Outdoor Rated cables with Direct Burial Jackets for routing through underground conduit. (Cable with Plenum Rated jackets are not recommended for routing through underground conduit).
3. In situations where cables are routed through above ground conduit, you may consider the use of cable with Plenum Rated jackets.
4. Suggested cable options for RSPs are as follows:
   - Alpha 35484 (direct burial) or equivalent
   - Belden YR44768 (direct burial) or equivalent.
   - Alpha 2214C (Plenum Jacket) or equivalent.
5. Contact the cable manufacturer for recommended cable parameters applicable to the specific site requirements and compliant with the local code.

COMMUNICATION (SUPERVISORY COMPUTER (SC), MONITOR COMUTER (MC)					
CB	Ethernet Switch	CAT 5E, EIGHT CONDUCTOR, 24AWG, TWISTED PAIR, SHIELDED, DIRECT BURIAL JACKET	328 ft (100m)	NA	NA
SC	Ethernet Switch	CAT 5E, EIGHT CONDUCTOR, 24AWG, TWISTED PAIR, SHIELDED, DIRECT BURIAL JACKET	328 ft (100m)	NA	NA
MC	Ethernet Switch	CAT 5E, EIGHT CONDUCTOR, 24AWG, TWISTED PAIR, SHIELDED, DIRECT BURIAL JACKET	328 ft (100m)	NA	NA

Note: For greater lengths of cable required over 328 ft (100m) convert to Multi-Mode Fiber Optic Cable.

BATTERY BOX (BB), POWER SUPPLY (PS) – 120V ac POWER, State of Health (SOH)					
CB	BB	COPPER, TWO CONDUCTOR, 12AWG, STRANDED CABLE, UNSHIELDED	6.5 ft (2m)	*** See Note:**	8 A
CB	BB	COPPER, SINGLE CONDUCTOR, 18AWG, GND BONDING WIRE	6.5 ft (2m)	NA	NA
CB	BB – (SOH)	SIX CONDUCTOR FLAT CABLE, 26AWG, UNSHIELDED, PLENUM JACKET	100 ft (30m)	NA	10 mA
PS	BB	COPPER, THREE CONDUCTOR, 14AWG, STRANDED CABLE, UNSHIELDED	NA	Operating Range: 103 – 132 VAC	3 A

Note: While the Control Box is operational within the DC Voltage range of 20V to 35V, it is recommended that the Control Box is supplied with nominal 24V power. Any voltage drop between the Control Box and Battery Box will reduce the battery backup capacity and change the maximum cable lengths (listed in this table) between the Control Box and other system components.

Note: *Use Table F-1 and F-2 (refer to Appendix F) to label and reference wire colors to connector pin outs for a chosen cable (see Table 3-1 for cable choices) prior to the cable installation.*

3.1.1 Equations for Determining Maximum Cabling Runs For RPMs

Note: For simple/basic installations when only a few components are to be used refer directly to Table 3-1 for cable lengths, wire gauge and specifications. Use the formulas below in conjunction with Table 3-1 when more complex systems are to be designed to determine cable lengths, wire gauge and specifications.

3.1.1.1 Single device

The maximum allowed cable length from the Control Box to the device can be calculated as:

$$X = V / (I*R_{meter})$$

Where:

X = the maximum cable length in meters

V = the maximum voltage drop allowed from Control Box to the last device in the chain

- RSP = 2 volts
- Annunciators = 4 volts

I = the maximum current in amperes of device:

- RSP & Internal Annunciator = 0.25 amp
- External Annunciator = 0.75 amp

R_{meter} = the resistance of the cable in ohms per meter from manufacturer's datasheet

3.1.1.2 Multiple Devices

For multiple devices the total voltage drop from the Control Box to the last device must be calculated. The total voltage drop must be less than the maximum allowable voltage drop. Use the formula below to calculate the total voltage drop.

V is the maximum voltage drop condition for cable runs with:

$$V = I_1*X_1R_1 + I_2*X_2R_2 + I_3*X_3R_3 \ldots\ldots + I_j*X_jR_j$$

Where:

V = the total voltage drop for cable runs.

I_i = the total current draw of the devices downstream of device (i-1). (I_1 is the current draw of all devices downstream of the control box)

X_i = the cable distance from device (i-1) to (i). (X_1 is the distance from the control box to first device)

R_i = the cable resistance from device (i-1) to (i). (R_1 is the control box to first device cable ohms per meter) Note that the cable for each run does not have to be the same. Lower impedance cable can be used on the runs closer to the control box to reduce the voltage drop caused by the higher combined loading.

Example #1:

RSP WIRING STRING

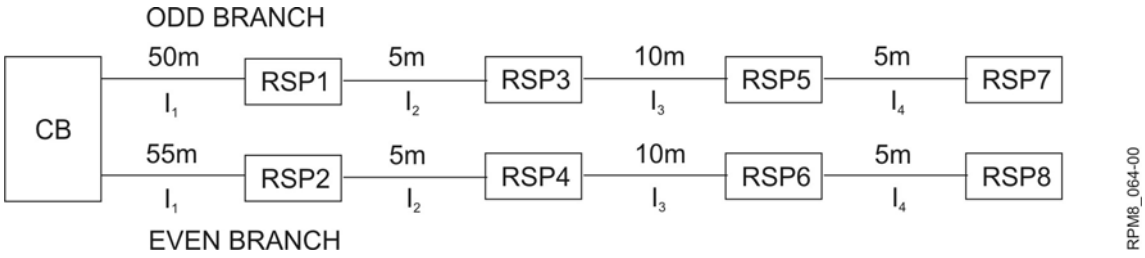

Note: Distance to RSP2 is greater by 5m compared to RSP1, since the distance across the traffic lane must be added.

RSP maximum current draw = 0.25A

RSP maximum allowable voltage drop = 2V

I_1 = 0.25A + I_2 = 1.00A

I_2 = 0.25A + I_3 = 0.75A

I_3 = 0.25A + I_4 = 0. 50A

I_4 = 0. 25A

X_1 = 55m	**R_1 = 0.0209 Ω/m (18AWG cable)**
X_2 = 5m	**R_2 = 0.0529 Ω/m (22AWG cable)**
X_3 = 10m	**R_3 = 0.0529 Ω/m (22AWG cable)**
X_4 = 5m	**R_4 = 0.0529 Ω/m (22AWG cable)**

$I_1 * X_1 R_1 + I_2 * X_2 R_2 + I_3 * X_3 R_3 + I_4 * X_4 R_4 \leq 2V$

1.0 x 55 x 0.0209 + 0.75 x 5 x 0.0529 + 0.50 x 10 x 0.0529 + 0.25 x 5 x 0.0529 ≤ 2V

1.15V + 0.20V + 0.26V + 0.06V = 1.67V

The total voltage drop of **1.67V** is less than the Maximum Allowable Voltage drop of **2V**.

Therefore the planned wire gauge is acceptable for the required cable length.

Example #2:

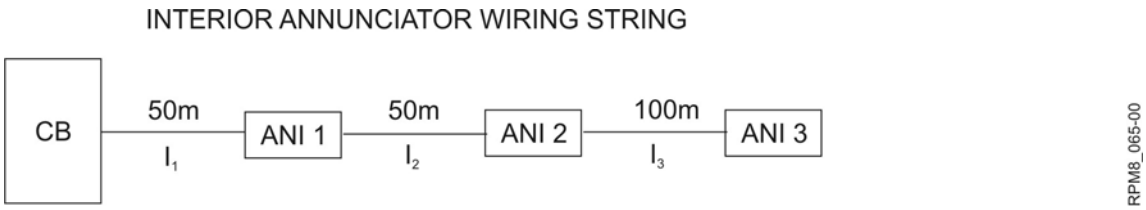

ANI maximum current draw = 0.25A

ANI maximum allowable voltage drop = 4V

I_1 = 0.25A + I_2 = 0.75A

I_2 = 0.25A + I_3 = 0. 50A

I_3 = 0. 25A

X_1 = 50m **R_1 = 0.0333 Ω/m (20AWG cable)**

X_2 = 50m **R_2 = 0.0529 Ω/m (22AWG cable)**

X_3 = 100m **R_3 = 0.0529 Ω/m (22AWG cable)**

$I_1 * X_1 R_1 + I_2 * X_2 R_2 + I_3 * X_3 R_3 \leq 4V$

0.75 x 50 x 0.0333 + 0.50 x 50 x 0.0529 + 0.25 x 100 x 0.0529 ≤ 4V

+ 1.25V + 1.32V + 1.32V = 3.89V

The total voltage drop of **3.89V** is less than the Maximum Allowable Voltage drop of **4V**.

Therefore the planned wire gauge(s) is acceptable for the required cable length.

3.1.1.3 Wiring Strings

It is also important to note that these calculations should be performed for each wiring string. The wiring strings are (Refer to Table 3-1 when calculating cable length for the following strings).

- Odd RSPs branch
- Even RSPs branch
- Interior Annunciator (ANI)
- Exterior Annunciators (ANE)

3.1.2 Cabling

3.1.2.1 Communication (Supervisory Computer (SC), Monitor Computer (MC) - Ethernet Conduit (CAT 5e)

Typically communication cabling is routed underground (Exterior locations) in conduit between the Control Box and the building, once in the building (Interior location) the cable can be routed through plenums to the location of the Ethernet switch (see below).

- For **interior** locations, use CAT 5e cable meeting ANSI/TIA/EIA-568-B.2, shielded, plenum-rated, flame – retardant jacket. Use Berk-Tek P/N 10023832 CAT 5e or equivalent cable.
- For **exterior** locations, use CAT 5e cable meeting ANSI/TIA/EIA-568-B.2, shielded, outdoor-rated, direct bury. Unshielded, outdoor rated CAT 5e cable may also be used, provided that it is routed above grade in RMC. The unshielded cable may be routed in PVC in sections below grade. Ethernet cable shall be segregated from power cables when installed in cable vaults. Use Superior Essex P/N 04-601-58 CAT 5e or equivalent cable.

Note: Shielding is required for routed cable outside of conduit. For greater lengths of cable required over 328 ft (100m) convert to Multi-Mode Fiber Optic Cable. Cable specifications for different components are identified in Table 3-1.

3.1.2.2 Communication Cable (RS-485) - RSP

All cabling is typically routed underground in conduit between RSPs.

Table 3-1 recommends safe distances to use for the RSP cabling between the Control Box and the LAST RSP (Shield is required to achieve the 20V/m RF immunity level (EMC)). Allow at least 2 feet of slack cable for each connection before termination (excess cable is to be removed at termination).

If other cable lengths or wire gauges are required due to site-specific reasons, calculate the cable dimensions for the individual cable sections using the maximum allowable voltage drop and maximum current draw for each specific cable section (see Section 3.1.1 Equations for Determining Maximum Cabling Runs For RPMs).

Varying the gauge wire segments will maximize the cable length limits.

3.1.2.3 Communication Cable (RS-485) – Interior Annunciator (ANN8 and/or ANI)

Typically communication cabling is routed underground in conduit between the Control Box and the building, once in the building the cable can be routed through plenums to the location of the Annunciator.

Note: Once in the building, aluminum foil shielded cable is adequate for a low RF field environment, while braided copper shielded cable or armored cable may be required for a high RF field environment.

We recommend 8 conductor, 22AWG (4 twisted pair) shielded, outdoor rated communication cable with direct burial jacket (see Table 3-1 for specifications and lengths) for routing through underground conduit. (Cable with Plenum Rated jackets are not recommended for routing through underground conduit). ***The cable routed inside the building to the location of the future ANI shall be no greater than 7mm in diameter to facilitate threading the cable through the cable grip grommet assembly of the ANI.***

If other cable lengths or wire gauges are required due to site-specific reasons, calculate the cable dimensions for the individual cable sections using the maximum allowable voltage drop and maximum current draw for each specific cable section (see Section 3.1.1 Equations for Determining Maximum Cabling Runs For RPMs – Example #2).

Note: This is a temporary measure when anticipating an upgrade to new components. Varying the gauge wire segments will maximize the cable length limits.

3.1.2.4 Communication Cable (RS-485) – Exterior Annunciator (ANE)

Typically communication cabling with aluminum foil shielding is routed in conduit between the Control Box and the Exterior Annunciator.

We recommend 8 conductor, 22AWG (4 twisted pair) shielded, outdoor rated communication cable with direct burial jacket (see Table 3-1 for specifications and lengths) for routing through underground conduit. (Cable with Plenum Rated jackets are not recommended for routing through underground conduit).

Table 3-1 recommends safe distances to use for the RSP cabling between the Control Box and the LAST ANE (Shield is required to achieve the 20V/m RF immunity level (EMC)). Allow at least 2 feet of slack cable for each connection before termination (excess cable is to be removed at termination).

Varying the gauge wire segments will maximize the cable length limits.

3.2 Connecting the RSPs and Setting DIP Switches

Figure 3-3 shows the layout of the RSP components.

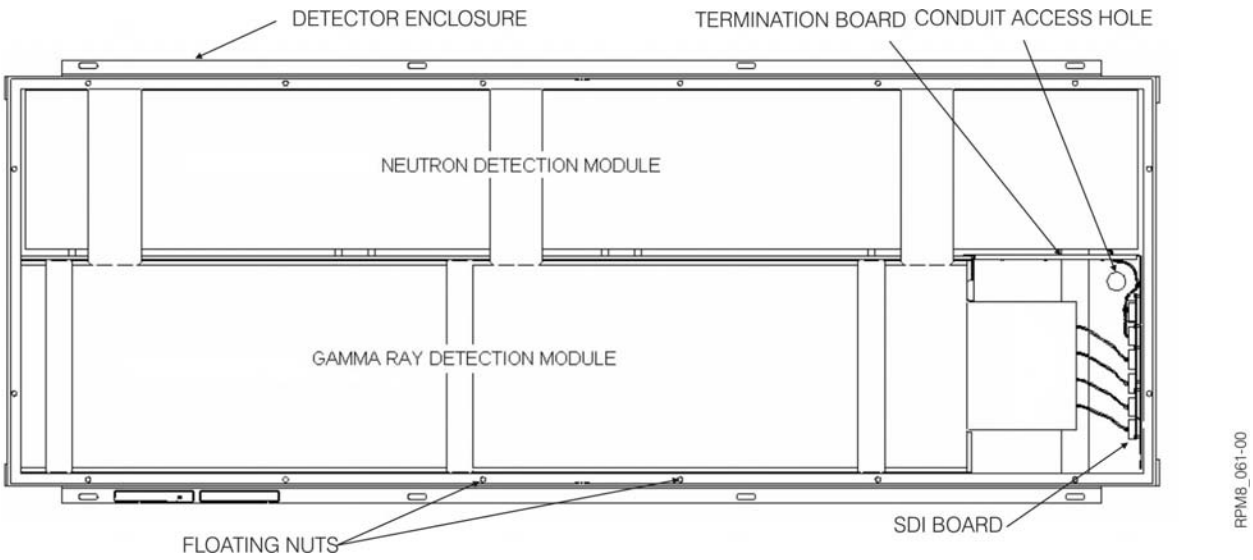

Figure 3-4 RSP Component Layout

To connect any number of RSPs, you connect EVEN-numbered RSPs and ODD-numbered RSPs separately. The VPSs and Control Box (CB) are connected to RSPs 1 and 2.

To connect the RSPs:

1. Loosen the captive hardware (typical 16 places) that attach the Detector Lid to the Detector Enclosure:
2. Remove the RSP Lid and locate the Kit containing the RFI Filter Assembly. The RFI Filter Assembly is packaged in a styrofoam container inserted into the hollow corner of the Detector Enclosure.

   Note: See Figure 3-4 that shows the contents of the RFI Filter Kit, which contains:

   - PN 21686-1 - Data CBL Noise Suppression Cover
   - PN 21685-1 - Data CBL Noise Suppression Bracket with nuts (Qty 4, Nylock #6)
   - PN 16-600-201 – Broadband Clamp-on Ferrites (Qty 2)
   - 9.7” long nylon cable tie
3. Remove the RFI Filter Assembly from the styrofoam enclosure and discard the packaging.
4. Remove the nylon nuts (Qty 4) holding the cover to the bracket.

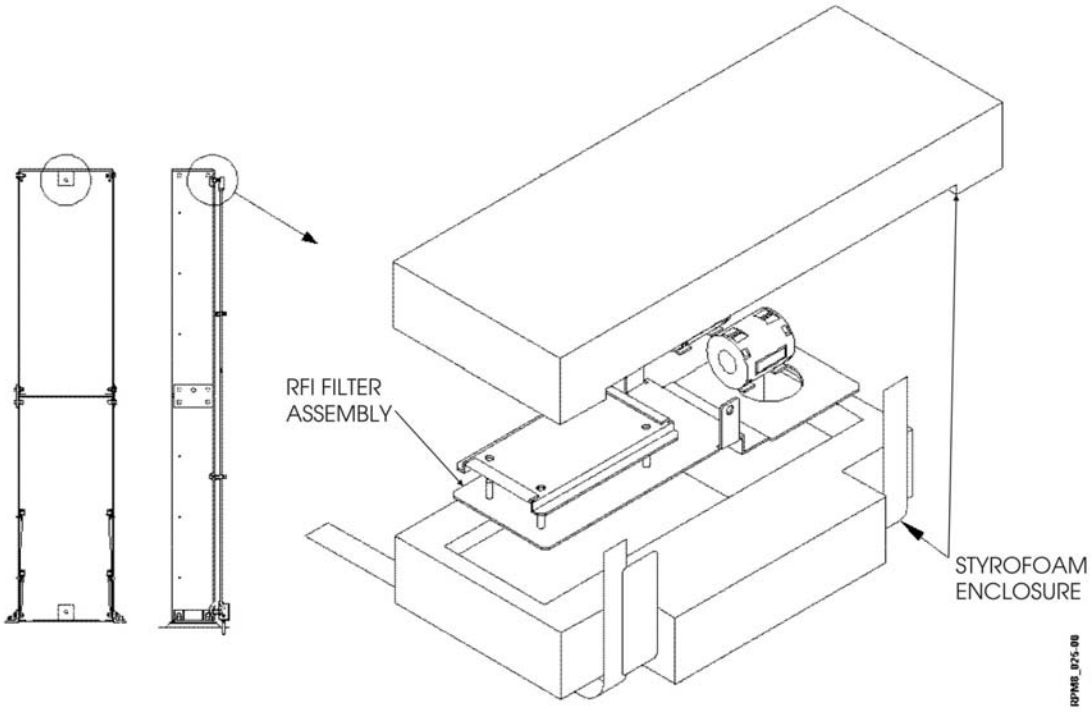

Figure 3-5 RFI Filter Assembly Kit

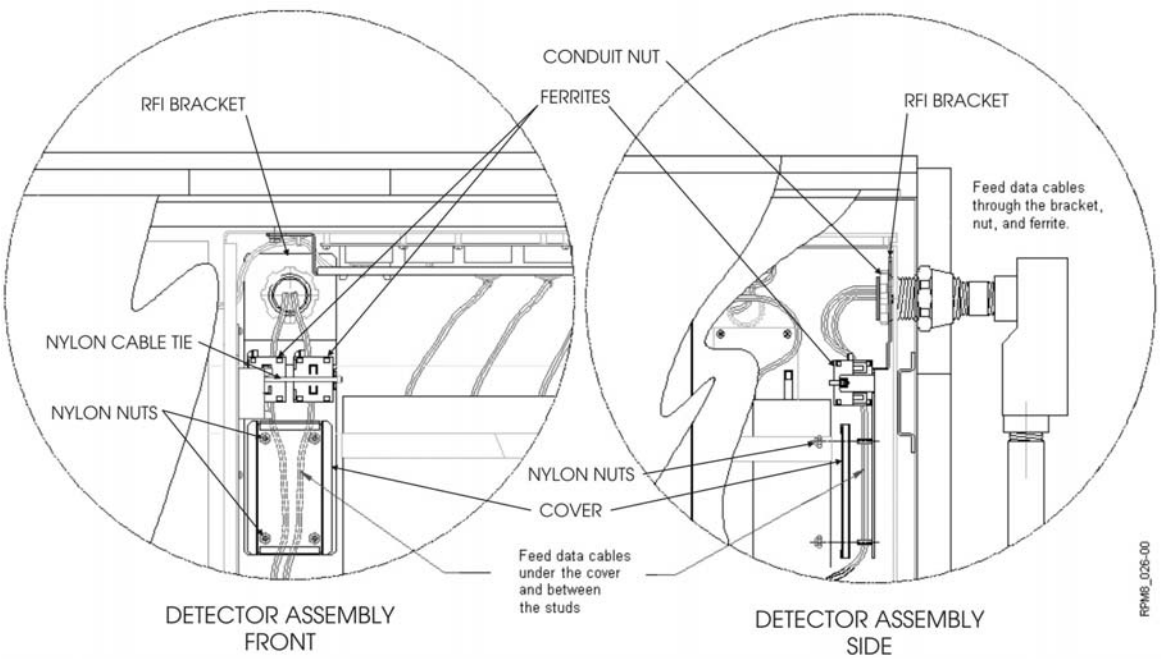

Figure 3-6 RFI Filter Assembly Installation Diagram

Note: All RSP connecting cables must pass through the RFI Filter Assembly before they are connected to the RSP TRM CCA. Refer to Figure 3-6 for the RFI Installation steps.

5. Route RSP cables through the 1-1/8" diameter conduit access hole into the RSP housing and feed the cables through the bracket, conduit nut, and ferrites.
6. Attach the bracket to the enclosure wall with the conduit nut, and ensure nut is tight.
7. Feed the RSP cables under the cover and between the studs.
8. Fasten the cover in position with the four nylon nuts.
9. Fasten the ferrites in place with the nylon cable tie.
10. Figure 3-7 and 3-8 show the wiring connections for an eight RSP system. Connect a four RSP system in the same manner, but terminate RSP4 as the last RSP.

⚠ ***CAUTION*:** Care must be taken when connecting the +24V DC power lines (wires – White, Black, Green and Black), ensure correct pin connection by tagging these wires (see Figures 3-7, 3-8 and 3-15). Incorrect pin connections will damage the equipment.

Note: To facilitate wiring the cables properly use the Wire Table(s) available in Appendix F (refer to Table F-1) to label colored wires to pin-outs for both ends of the cable.

- EVEN RSPs are connected as shown (see Figure 3-7), with the last RSP (RSP 8) being terminated and the first RSP (RSP 2) connecting from RSP 2 TRM Board (TB1) to the Control Box CB TRM Board - TS2 connector (RSP/EVEN) (as shown on Figure 3-11).
- ODD RSPs are connected as shown (see Figure 3-8), with the last RSP (RSP 7) being terminated and the first RSP (RSP1) connecting from RSP 1 TRM Board (TB1) to the Control Box CB TRM Board – TS1 connector (RSP/ODD) (as shown on Figure 3-11).

Note: For more information refer to Figure 3-1 AT-980 System Interconnect Diagram (Two RSP System) which shows the cable connections for a POV configuration. Refer to Figure 3-2 AT-980 System Interconnect Diagram (Four RSP System) showing the cable connections for a Truck/Cargo configuration. Figure 3-3 AT-980 System Interconnect Diagram (Eight RSP System) which shows the cable connections for a Truck/Cargo configuration.

11. Make ODD or EVEN RSP cable connections to the RSP TRM Board and Terminal Blocks (TB1 or TB2) as per the following steps:
    a) Connect the EVEN-numbered RSPs (i.e. RSP 2 to RSP 4 to RSP 6 to RSP 8) by connecting the terminal blocks RSP 2 (TB2) to RSP 4 (TB1) in series RSP 4 (TB2) to RSP 6 (TB1), RSP 6 (TB2) to RSP 8 (TB1) and terminate the last RSP in the line (TB2) by ensuring the jumper is installed **(remove jumpers from all other RSP TRM Boards)**.
    b) Connect the ODD-numbered RSPs (i.e. RSP 1 to RSP 3 to RSP 5 to RSP 7) by connecting the terminal blocks RSP 1 (TB2) to RSP 3 (TB1) in series RSP 3 (TB2) to RSP 5 (TB1), RSP 5 (TB2) to RSP 7 (TB1) and terminate the last RSP in the line (TB2) by ensuring the jumper is installed **(remove jumpers from all other RSP TRM Boards)**.
12. Make VPS connections as follows:
    a) Connect cables from the optical sensors (Receiver) VPS1, 2, 3 and 4 to RSP 1 Termination Board (TRM) OS1 to OS4 respectively. The Banner Q45 sensor provides four wires, three wires (brown, white and blue) will be recognized on the Receiver cable (do not terminate the black wire).
    b) Connect cables from the optical sensors (Transmitter) VPS1, 2, 3 and 4 to RSP 2 Termination Board (TRM) OS1 to OS4 respectively. The Banner Q45 sensor provides four wires, two wires (brown and blue) will be recognized on the Transmitter (Emitter) cable although the white wire will be ignored connect it as shown to provide a uniform connection between the EVEN and ODD RSPs (do not terminate the black wire).

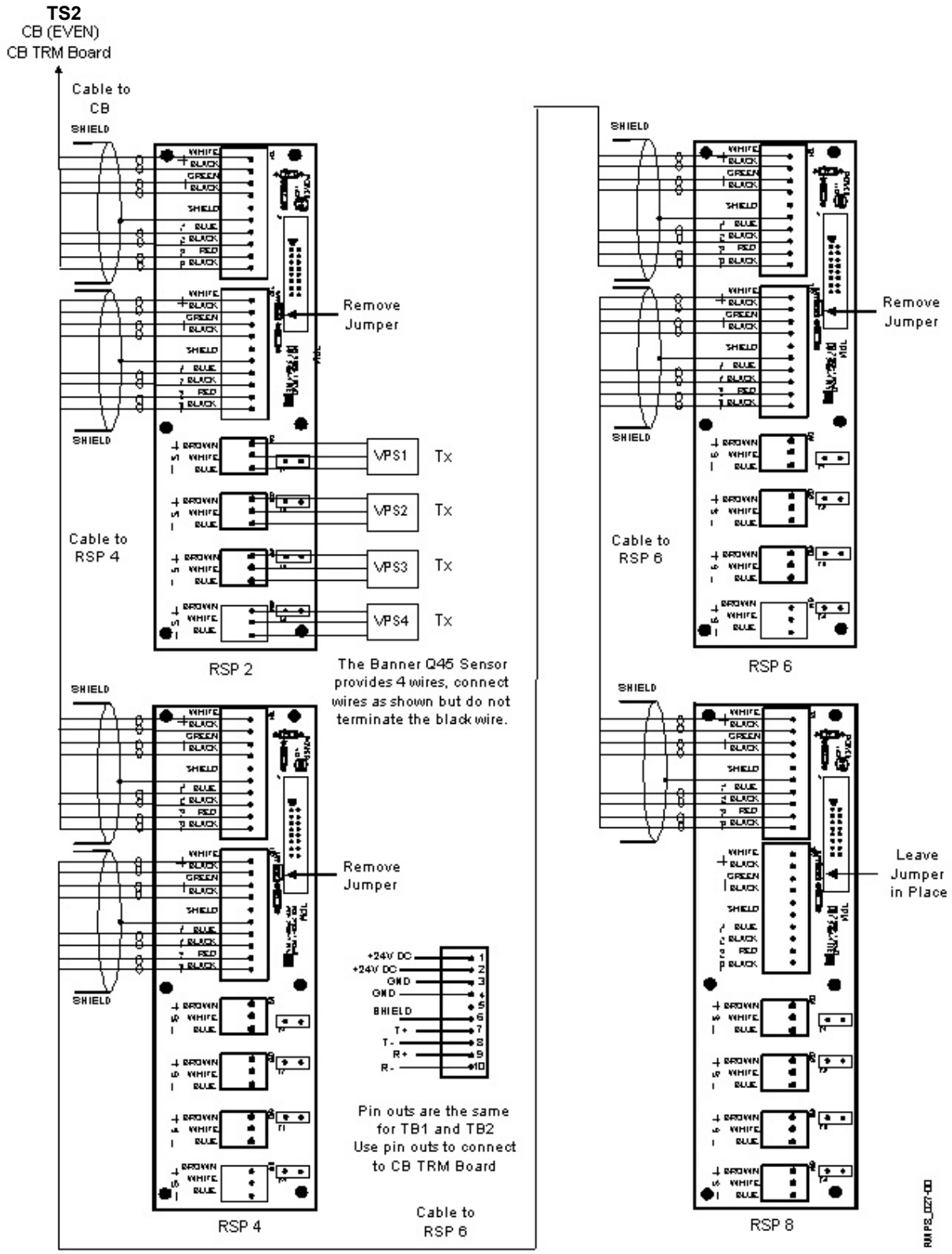

Figure 3-7 EVEN RSP Connection Diagram

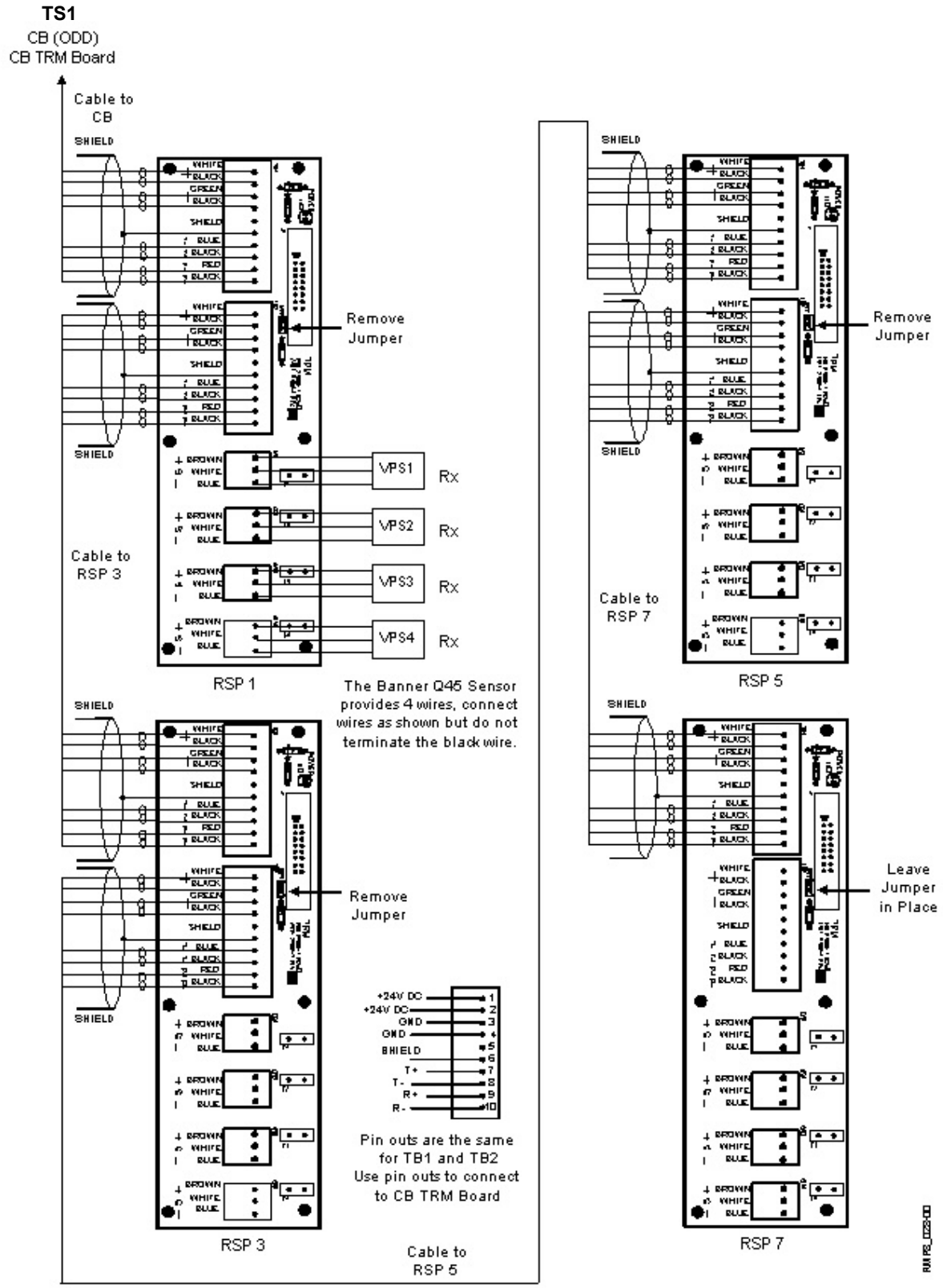

Figure 3-8 ODD RSP Connection Diagram

13. Set the address of each RSP with the DIP-switches (located on each RSP SDI CCA) as shown in Figure 3-9.

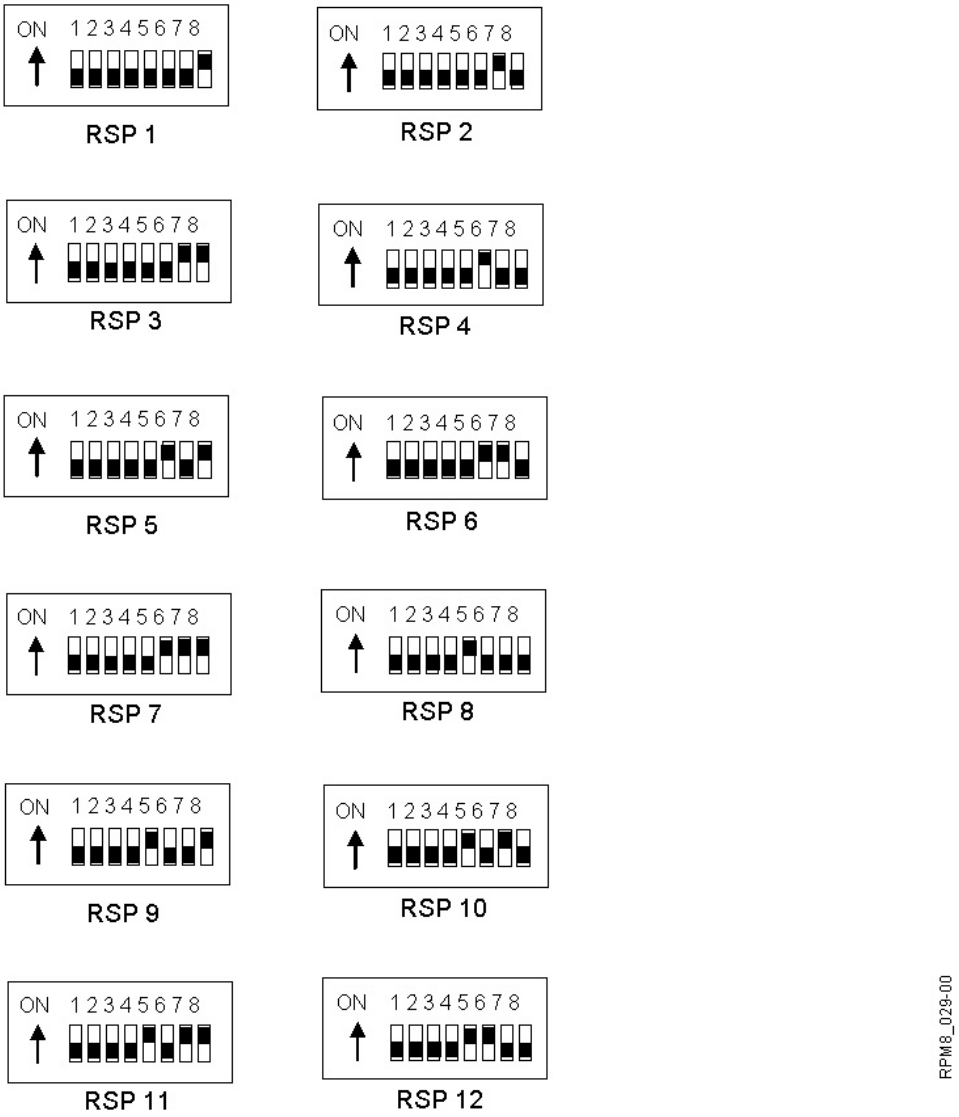

Figure 3-9 RSP DIP Switch Addresses

14. Replace the lid onto the RSP Enclosure and tighten the captive hardware.
15. Torque all bolts to 30 ±5 in-lbs (Typical 16 places).

⚠ ***CAUTION*:** Always torque the captive detector lid bolts to the specified torque value:

- Under-torquing the bolts will cause leaks
- Over-torquing the bolts will deform the lid and/or damage the floating nuts
- To avoid damaging the floating nuts start bolts by finger tightening.

3.3 Connecting the Control Box (CB)

The Control Box (CB) consists of the CBI TRM CCA, Control Box Interface (CBI) CCA, CPU CCA, and the Control Panel as shown in Figure 3-10.

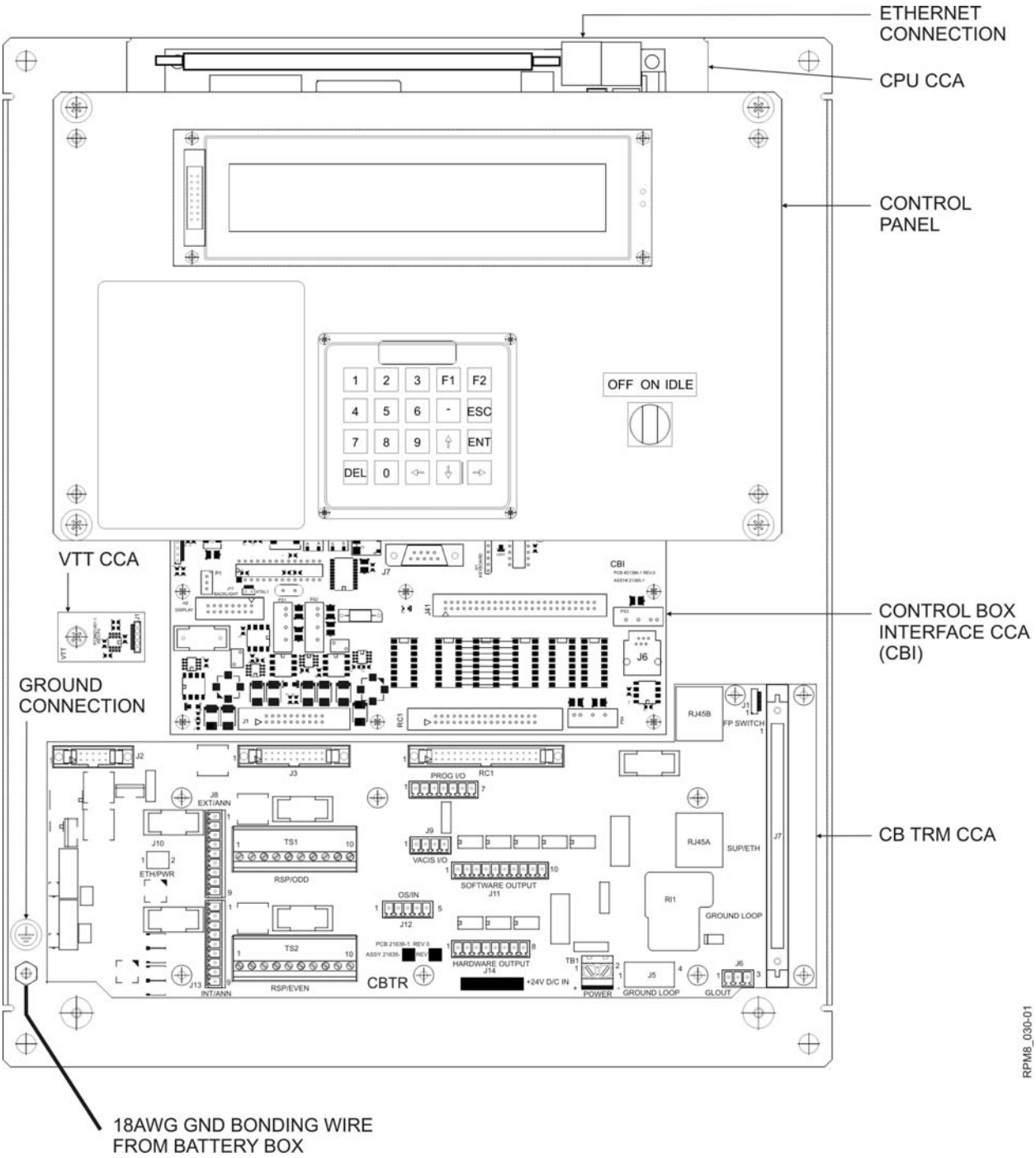

Figure 3-10 Control Box Component Diagram

Ensure that the following cable connections are mated properly in the Control Box (Refer to Figures 3-11, 3-12, and 3-13):

1. CBI TRM CCA (PN 21635-1) to CBI CCA (PN 21385-1):
   a) Cable PN 21481-1 is connected from CBI TRM CCA J3 to CBI CCA J1.
   b) Cable PN 21482-1 is connected from CBI TRM CCA RC1 to CBI CCA RC1.
   c) Cable PN 36068-1 is connected from CBI TRM CCA J2 to CBI CCA J7.
   d) Wire from CBI TRM CCA J1 to the Front Panel Rotary Switch (PN 21474-1).
   e) Cable PN 21883-1 from CBI TRM CCA RJ45B to CPU CCA T1 (RJ45) socket.
2. CBI CCA (PN 21385-1) to Keyboard (PN 21976-1):
   a) Cable PN 21478-1 from CBI CCA H1 to Keyboard J1.
3. CBI CCA (PN 21385-1) to Display (PN 21466-1):
   a) Cable PN 21479-1 from CBI CCA H2 to Display J2.
   b) Wire (Backlight) from CBI CCA J11 to Display connector (pins K and A hardwired).
4. CBI CCA (PN 21385-1) to CPU CCA (PN 21955-1):
   a) Cable PN 21483-1 from CBI CCA J40 to CPU CCA J40.
   b) Cable PN 21484-1 from CBI CCA J41 to CPU CCA J41.
   c) Cable PN 21485-1 from CBI CCA J43 to CPU CCA J43.
   d) Wire (DC Power) from CBI CCA TB2 (hardwired) to CPU CCA J7.
5. CBI CCA (PN 21385-1) to VTT CCA (PN 21450-1):
   a) Cable PN 21473-1 from CBI CCA J10 to VTT CCA J1.

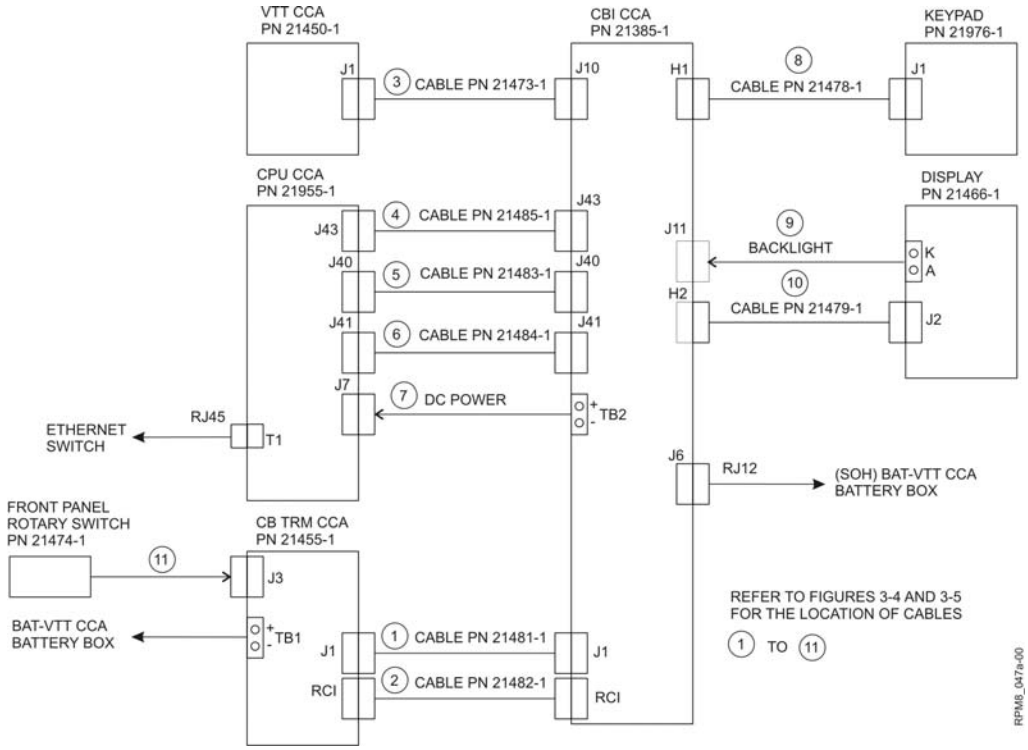

Figure 3-11 Control Box Interconnect Diagram

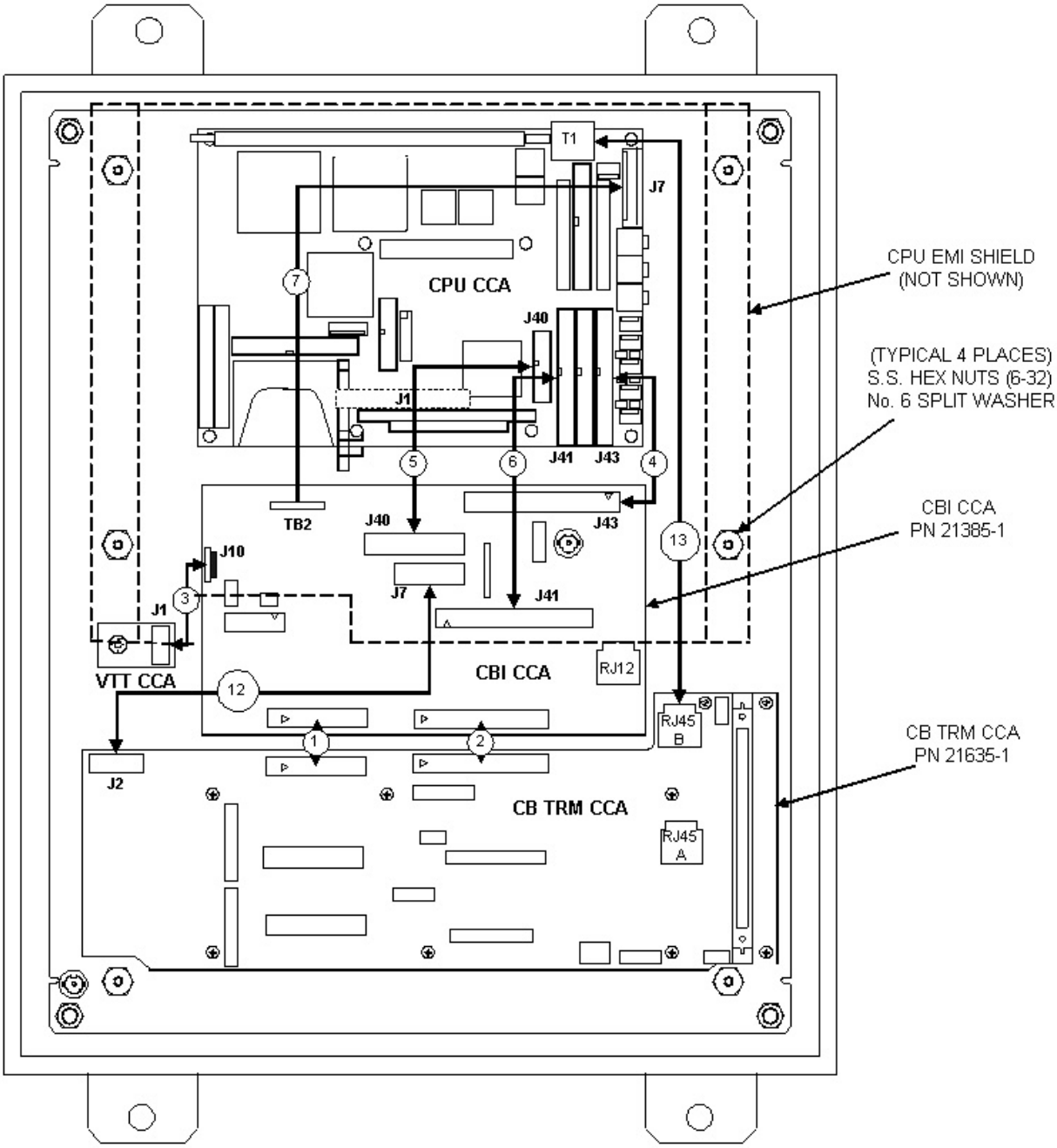

For Cables (1) to (7) and (12), (13) refer to the Interconnect Diagram for Part Identification

REFER TO FIGURE 3-11

Figure 3-12 CB Internal Cable Connections

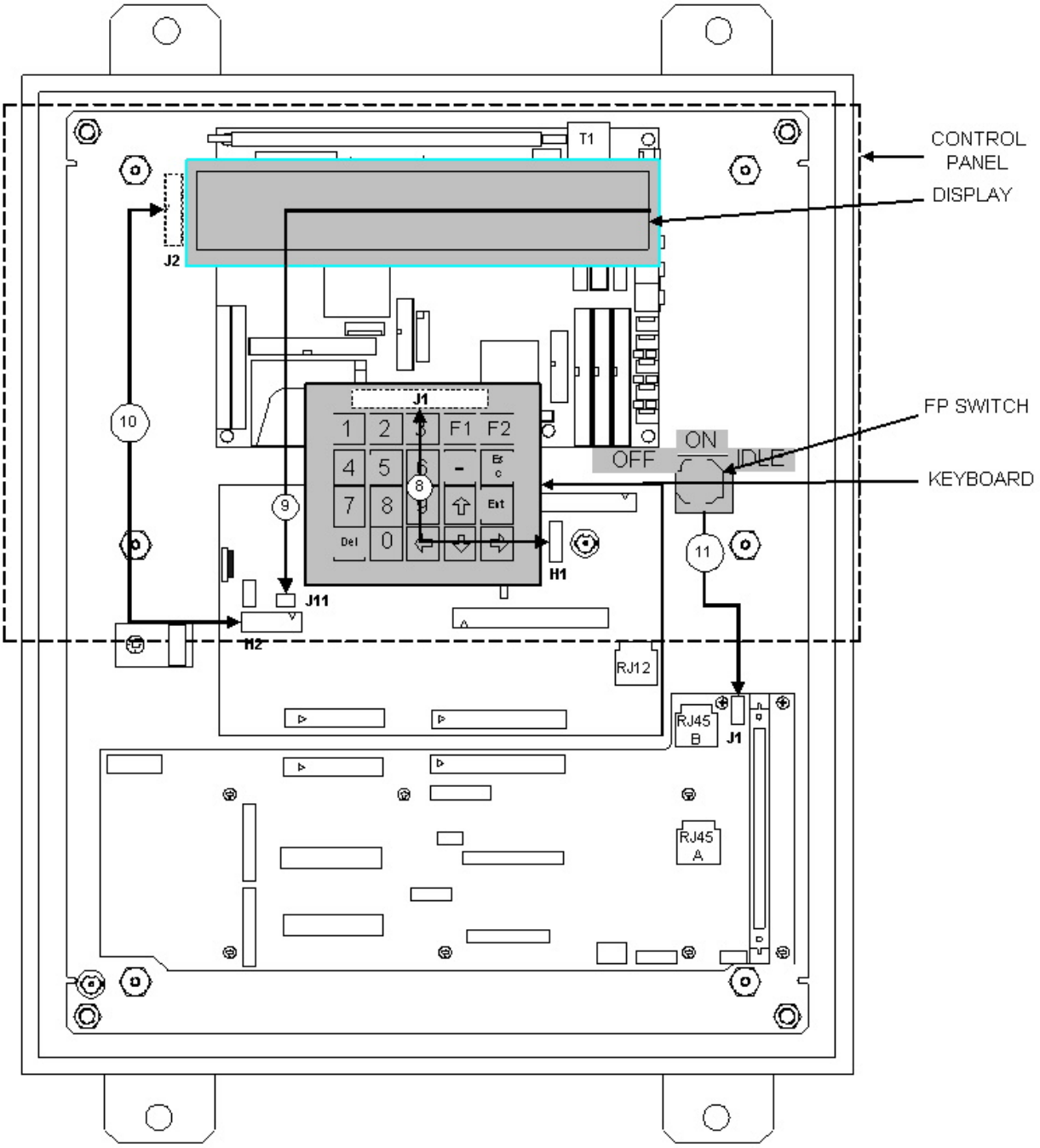

For Cables 8 to 11 refer to the Interconnect Diagram for Part Identification

REFER TO FIGURE 3-11

Figure 3-13 CB Display Panel Connections

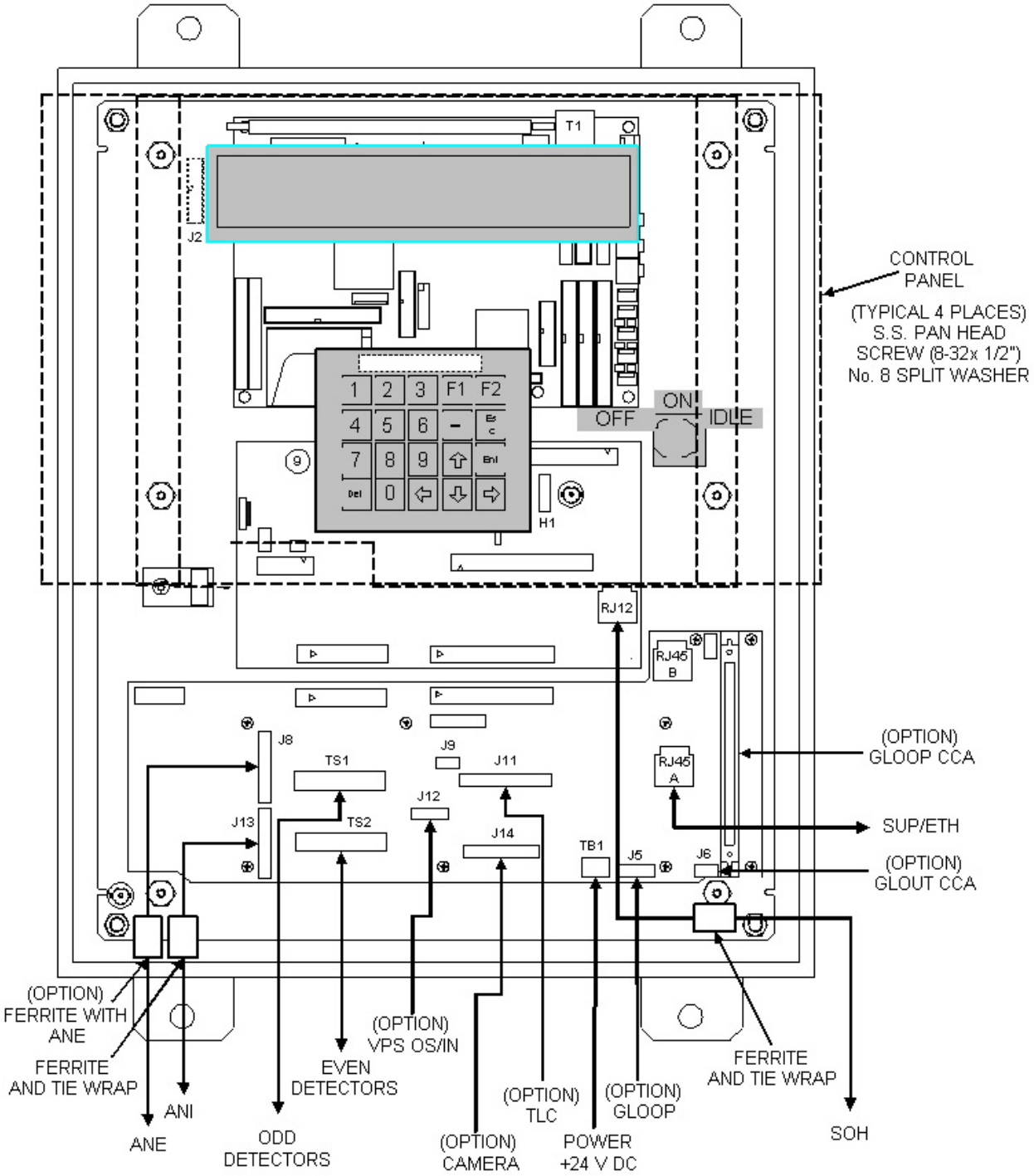

Figure 3-14 CB External Cable Connections

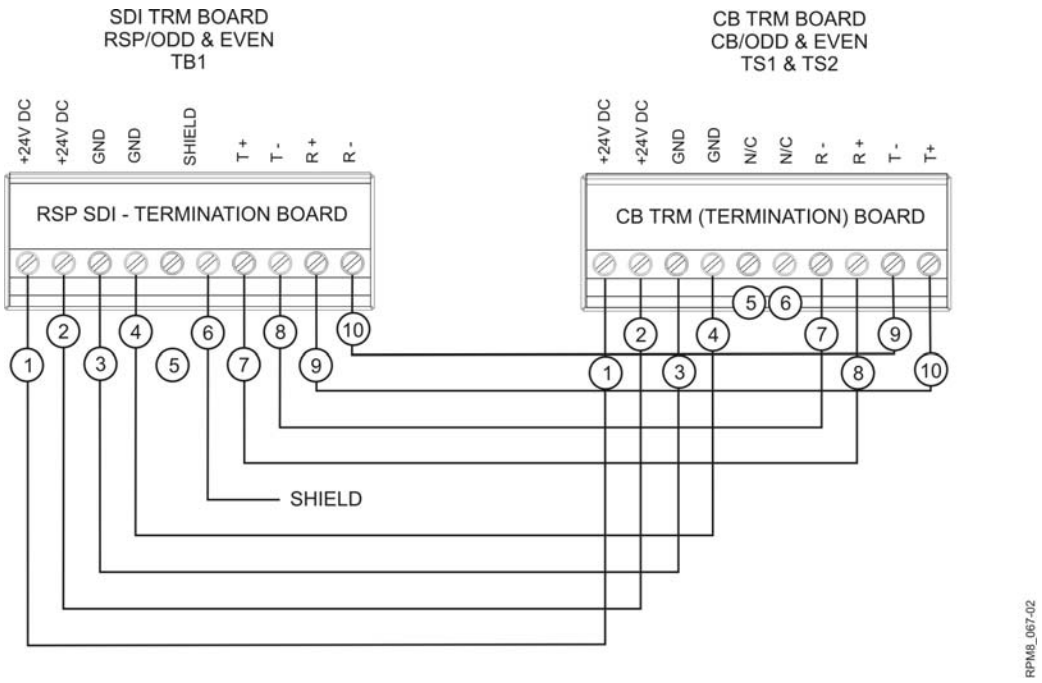

Figure 3-15 RSP to CB Connections

Note: The above diagram will not agree with the silkscreen for any SDI TRM PWB prior to Rev D. Pin outs 7 and 8 on the SDI Termination (TRM) Board were reversed (corrected) to suit the signal names for pins 7 and 8 on the CB TRM Board.

The CB must be connected to the following equipment:

- EVEN and ODD numbered RSPs (connect RSP ODD and EVEN TB1 to CB TRM TS1 (RSP/ODD) and TS2 (RSP/EVEN) in accordance with Figure 3-15).
- Annunciators (make connections as per Figures 3-17 and 3-20).
- Battery Box (make connections as per Figures 3-14, 3-18 and 3-19)
- Supervisory and Monitor computers (see sections 3.9 and 3.10 for more information).
- Traffic Light Controller (optional) (see Figure 3-16).

Table 3-2 – Control Box Cable List

From (connector name)	On CCA	To (equipment)	Cable Type
RSP TRM - ODD (TB1)	CB TRM	Odd numbered RSPs (i.e. RSP 1)	(See Table 3-1)
RSP TRM - EVEN (TB2)	CB TRM	Even numbered RSPs (i.e. RSP 2)	(See Table 3-1)
EXT/ANN (TS1)	CB TRM (J8)	Exterior Annunciators	(See Table 3-1)
INT/ANN (TS1)	CB TRM (J13)	Interior Annunciators	(See Table 3-1)
BAT-VTT - POWER	CB TRM	Battery Box	2 x 12AWG
TLC (optional)	CB TRM	Traffic Light Controller (optional)	Alpha 2214 four -pair
RJ45A (Ethernet switch)	CB TRM	Supervisor computer (via switch)	CAT 5e, shielded
RJ45B (CB TRM)	CPU (RJ45)	Network Connection Jumper Cable	CAT 5e, shielded
BAT-VTT - RJ12	CBI – RJ12	State-of-Health (SOH) diagnostics	six conductor flat cable
Battery Box Ground Terminal	GND Stud	Control Box GND stud	18AWG

Table3-2 lists the connector names on the PCBs in the CB and the equipment to which each connector must be wired.

Make the following connections:

1. Connect the Network Jumper cable between the RJ45 socket on the CPU CCA T1 and the RJ45 socket on the CB TRM CCA RJ45B (refer to Figures 3-11 and 3-12).
2. Connect the Supervisory computer via an Ethernet switch to the RJ45 connector on the CB TRM CCA RJ45A socket (refer to Figures 3-11 and 3-14).
3. Connect the SOH cable from the BAT-VTT CCA in the Battery Box to the RJ12 connector on the CBI CCA J6 (refer to Figures 3-11 and 3-14). Install STEWART Ferrite (PN 16-600-220) onto the cable and secure with tie wrap (PN 28XPLT2S-M). Refer to Figure 3-14.

Connect the remaining cables to the CB TRM CCA as shown in Figure 3-16.

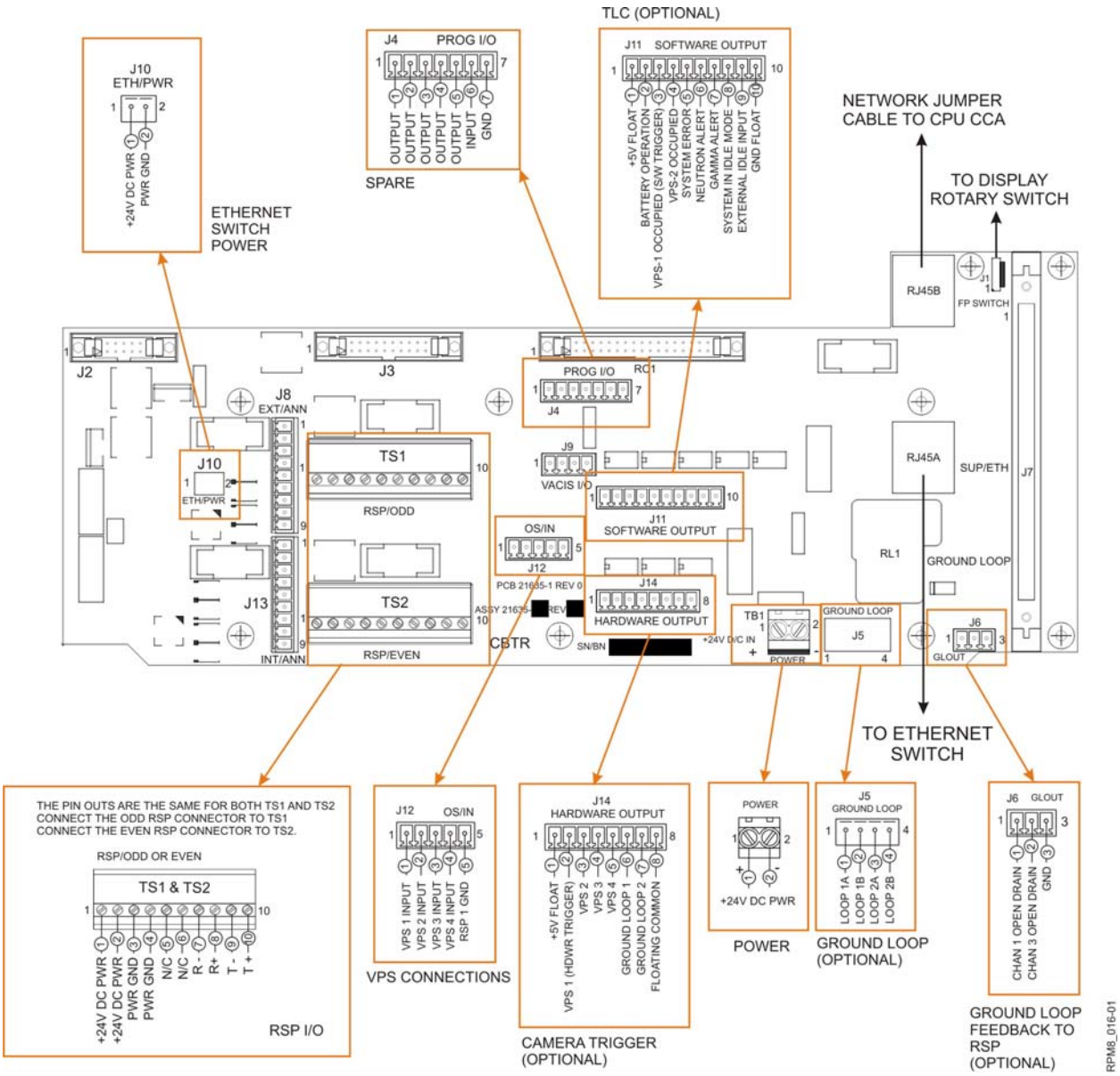

Figure 3-16 CBI TRM CCA Connections

Grounding

WARNING! Serious shock hazard.

The Battery Box requires 120 Volts AC 60Hz, 320VA input power. The 18 AWG green bonding cable is connected from the Battery Box ground terminal to the incoming ground stud in the CB.

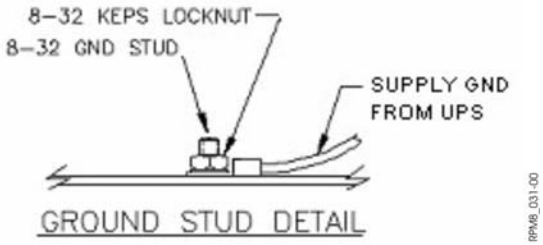

CAUTION: In order to ensure proper operation and safety of the equipment, the correct grounding is required. Make sure the CB incoming ground is attached to the terminal marked with the ground symbol. The correct order of grounding is: incoming ground, star washer/nut combo, ground to CB and star washer/nut combo.

3.4 Connecting the Interior and Exterior Annunciators (ANI/ANE)

Connect the ANI cable connector to the CB TRM CCA - J13 INT/ANN connector and/or connect the optional ANE cable connector to the CB TRM CCA - J8 EXT/ANN connector in accordance with the pin outs shown on Figure 3-17 ANI/ANE to CB Cable Connections (also refer to Figure 3-20). Install a STEWART Ferrite (PN 16-600-220) onto the cable at the CB and secure with tie wrap (PN 28XPLT2S-M), see Figure 3-22:

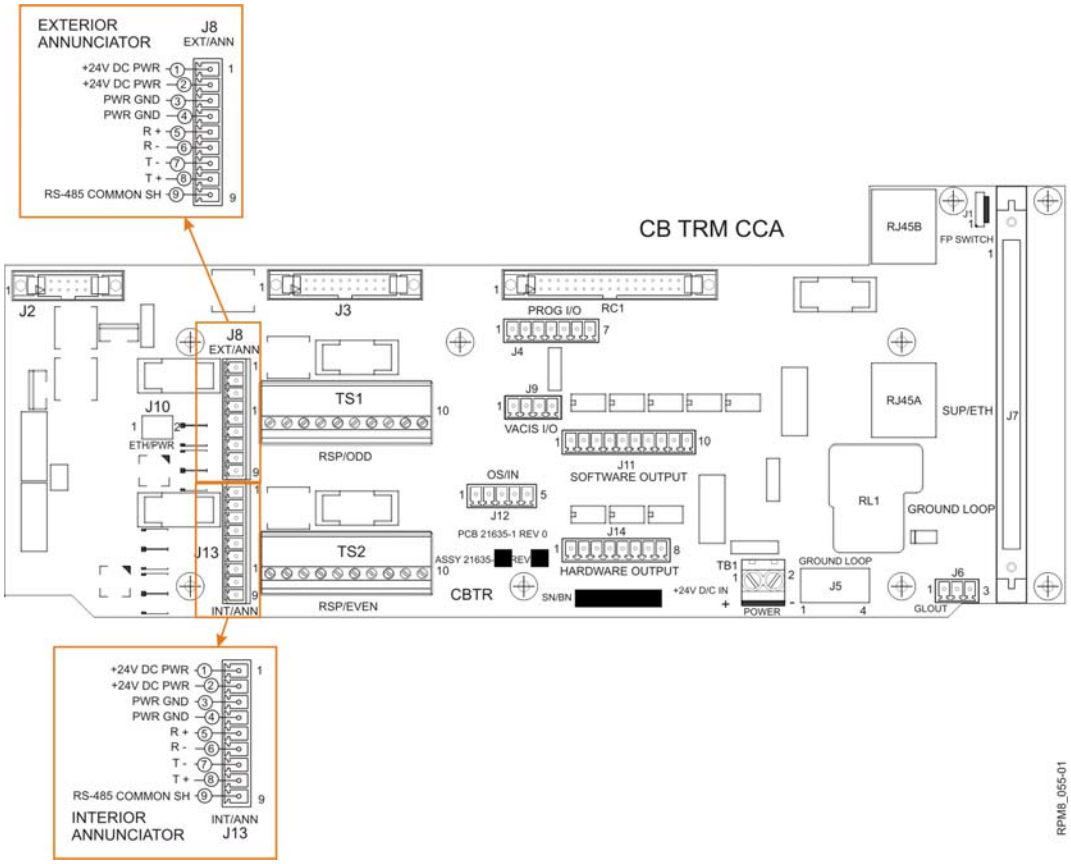

Figure 3-17 ANI/ANE to CB Cable Connections

3.5 Connecting the Battery Box

To connect the Battery Box wires (Refer to Figure 3-18):

1. Push the tab forward on the upper latch of the Battery Box case.
2. Open the upper and lower latches and open the case door.
3. Extend the charger tray as far forward as possible to gain sufficient access to the RFI Filter assembly.

   Note: If access is insufficient, the charger tray may be removed but must be supported to prevent damage to the cables or accidental disconnect.
4. Remove and retain four screws attaching the cover to the RFI Filter assembly.
5. Remove and retain the cover from the RFI filter assembly.
6. Route the incoming AC Power cable through the conduit access hole.
7. Connect the BROWN wire to (L) LINE, the BLUE wire to (N) NEUTRAL and the GRN/YELLOW wire to the GND stud as shown in Figure 3-18.

   Note: Make sure that the GND stud connections are made in the same order as shown in the GROUND STUD DETAIL of Figure 3-18.
8. Connect the 18AWG Green GND Bonding wire from the CB to the GND Bonding terminal in the Battery Box (see Eng. dwg No. 21690 for location and more information).
9. Replace the cover onto the RFI Filter assembly with four screws.
10. Replace the Charger tray and Charger to its' original position.

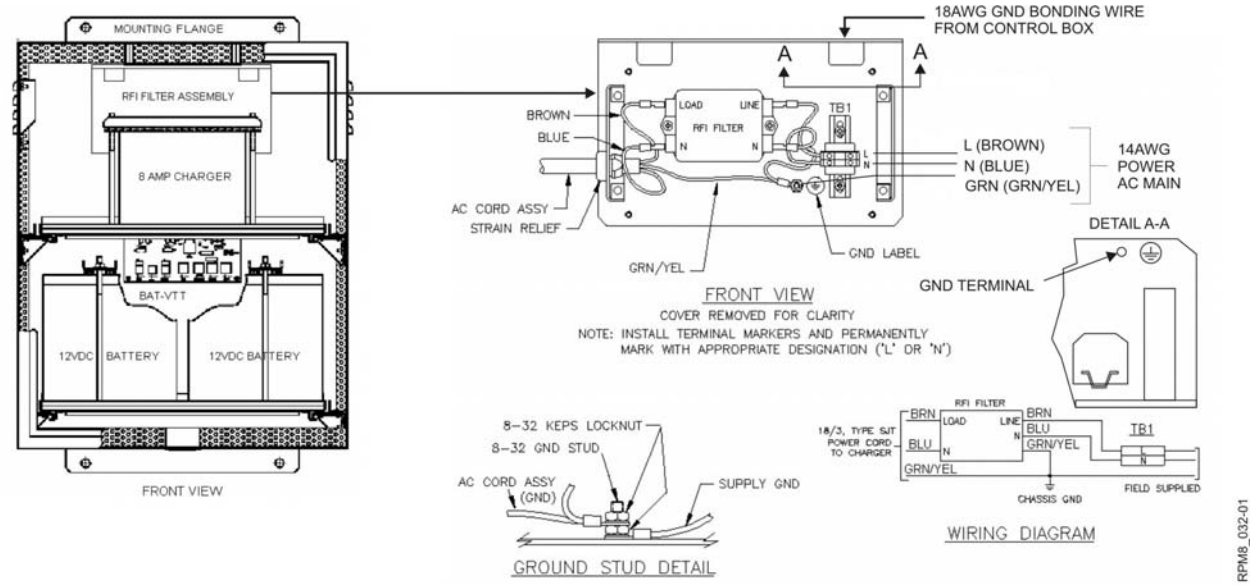

Figure 3-18 Battery Box Component Connections

11. Extend the battery tray as far forward as possible to gain sufficient access to the BAT-VTT CCA.

12. Check the RJ12 connection on the BAT-VTT circuit CCA (as shown in Figure 3-19) and the six conductor flat State-of-Health (SOH) diagnostics cable is connected to the CBI CCA J6 with the RJ12 connector (refer to Tables 3-2 and 3-3 and Figure 3-14).

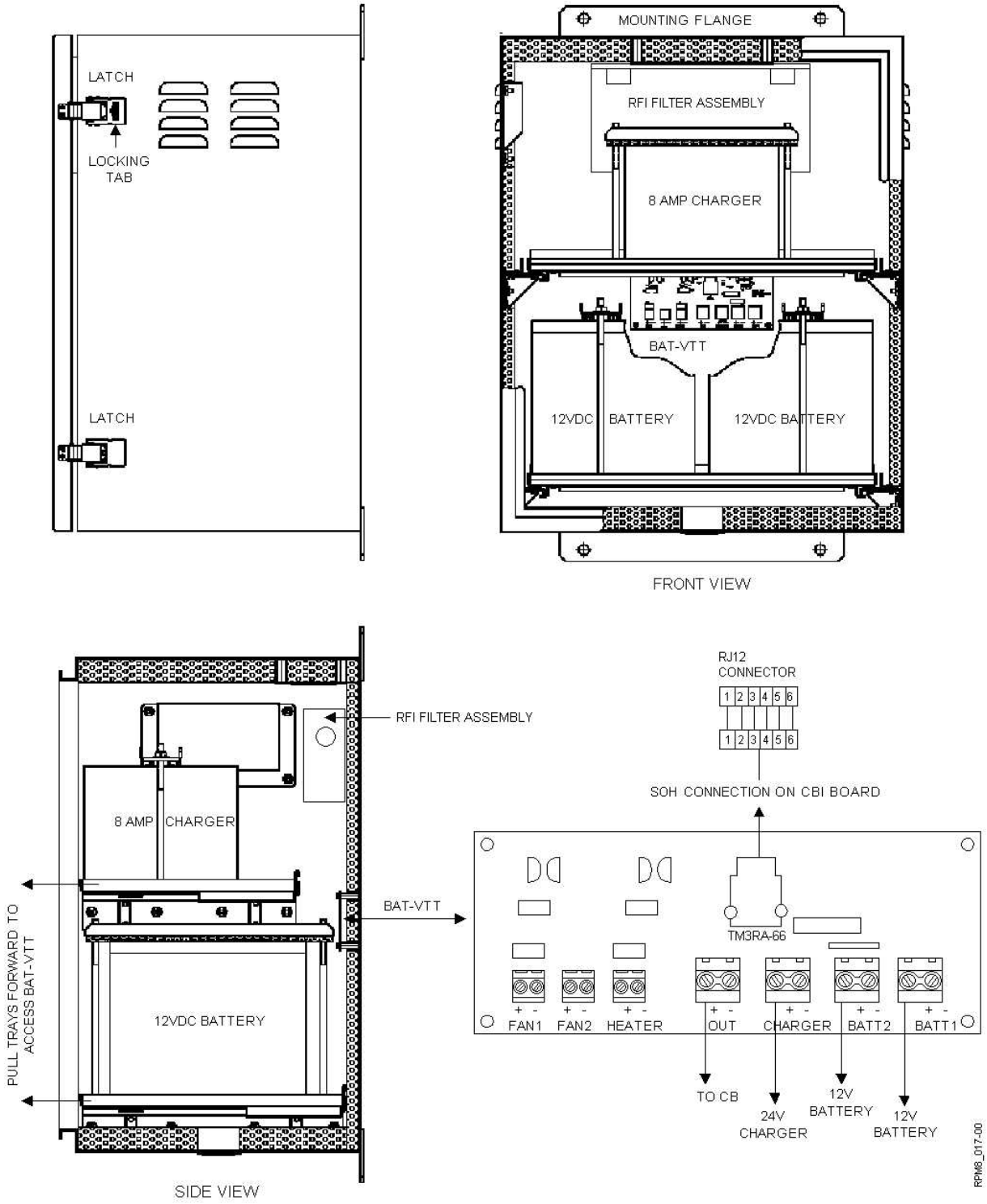

Figure 3-19 BAT-VTT Connections

CAUTION: Before connecting the Battery Box to the CB, the battery must be disconnected or the F1 fuse on the BAT-VTT CCA must be removed.

13. Connect each connector onto the BAT-VTT CCA according to Table 3-3.

    Note: Reconnect the battery or replace the F1 fuse on the BAT-VTT CCA before proceeding.

14. Replace the battery tray to its' original position.
15. Close and latch the case door.

Table 3-3 – Battery Box Cable List

From (connector name)	To (equipment)	Cable Type
OUT (+ / -)	Control Box – CB TRM	2 x 12 AWG
CHARGER	24V battery charger	2 x 12 AWG
BATT1	12V battery	2 x 12 AWG
BATT2	12V battery	2 x 12 AWG
RJ12	Control Box – CBI - RJ12 State-of-Health (SOH) diagnostics on CBI CCA	six conductor flat cable
GND Bonding Wire	Control Box – GND stud	1 x 18 AWG

WARNING: *Replace with Battery Type A512/40G6.* To prevent explosions and possible serious injury, the battery must be replaced by the same model and type. The recommended manufacturer and type is Sonnenschein dryfit A500 series type A512/40G6. Contact SAIC Exploranium for battery replacement.

Note: Both maintenance and cleaning, need to be performed on a regular basis to ensure the proper operation and safety of this equipment.

3.6 Connecting the Ground Loop (Supplied by Others)

The Ground Loop is wired to the CB TRM CCA as shown in Section 3.3 Connecting the Control Box (CB). The Ground Loop itself is not part of the RPM8 hardware (refer to Figures 3-14 and 3-16).

Note: Please consult the documentation that comes with the Ground Loop components for more detail.

3.7 Connecting the Traffic Light Controller (TLC) (Supplied by Others)

The Traffic Light Controller (TLC) is wired to the CB TRM CCA as shown in Section 3.3 Connecting the Control Box (CB) (refer to Figures 3-14 and 3-16). The TLC is not supplied with the RPM8 hardware. Please consult the documentation that comes with the TLC for more detail on that product.

3.8 Installing the Annunciator Assembly

3.8.1 Wiring the Terminal Blocks

Prepare the Annunciator cable and connectors as follows:

- Use an eight conductor (four twisted pair) shielded, Outdoor Rated communications cable with Direct Burial jacket for underground conduit (ie. Alpha 35484 (direct burial) or equivalent as described in Table 3-1).

The eight conductor shielded communications cable is constructed with four pairs of twisted wires. The communication cable will be connected through two interchangeable (loop through) 9 pin RS-485 port connectors with the following pin outs (see Figure 3-20):

Note: Make connections to the Control Box in accordance with Section 3.4 Connecting the Interior and Exterior Annunciators (ANI/ANE) (also refer to Figure 3-20).

⚠ **Caution!** Ensure that all connections are made as shown below (both ends), improperly wiring the power connection(s) (+24VDC) will damage the equipment.

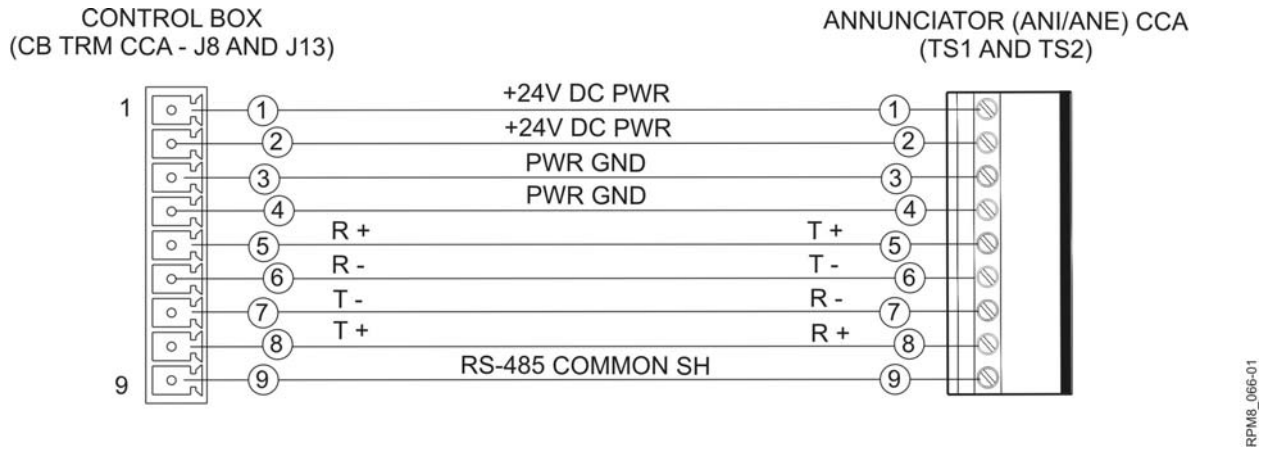

Figure 3-20 ANI/ANE RS-485 Cable Diagram

3.8.2 Annunciator Interior/Exterior Installation

Install the Annunciator Interior/Exterior as follows:

1. If not already installed, replace the Annunciator cable for the Interior Annunciator (ANI) with 8 conductor, 22AWG (4 twisted pair) shielded, outdoor rated communication cable with direct burial jacket (see Table 3-1 for specifications and lengths).

   ⚠ **Caution!** If using the original cable (CAT5E or 8 conductor flat cable) label all wires to the pin outs in accordance with Figure 3-16. **Since there is no shielding it will NOT meet the requirements of the RF and EMI standards.**

2. If optional Exterior Annunciator (ANE) is used run 8 conductor (4 twisted pair) shielded, outdoor rated communication cable (see Table 3-1 for specifications and lengths) to ANE box(es) (if multiple boxes are used refer to Figure 3-22).

3. Wire connector to a (loop through) 9 pin connector(s) J13 – ANI and/or J8 - ANE (CB) and terminal block(s) TS1 and/or TS2 (Annunciator) according to Figures 3-20 and 3-21:

Note: To facilitate wiring the cables properly use the Wire Table(s) available in Appendix F (refer to Table F-2) to label colored wires to pin-outs for both ends of the cable.

Interior Annunciator (ANI)

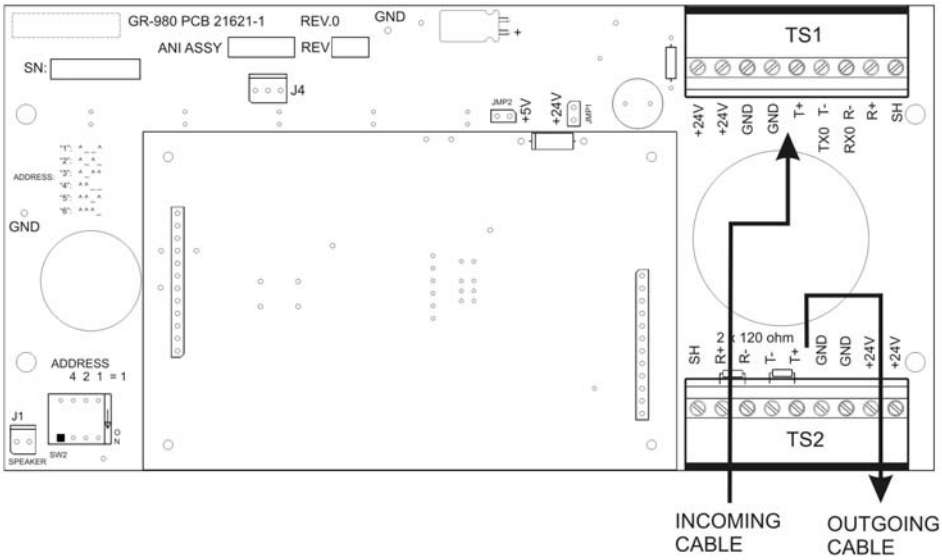

Exterior Annunciator (ANE) - Optional

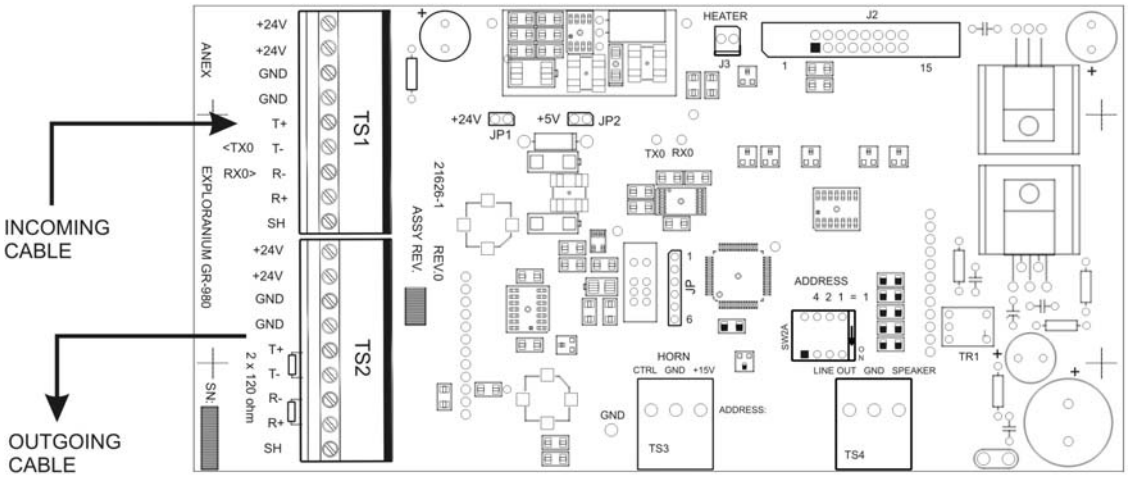

PIN OUTS TS1
INCOMING CABLE

PIN 1 - +24V ANN PWR
PIN 2 - +24V ANN PWR
PIN 3 - ANN GND
PIN 4 - ANN GND
PIN 5 - Transmit +
PIN 6 - Transmit -
PIN 7 - Receive -
PIN 8 - Receive +
PIN 9 - RS-485 COMMON SHIELD

Termination Resistors
2 x 120 ohm

PIN OUTS TS2
OUTGOING CABLE

PIN 1 - +24V ANN PWR
PIN 2 - +24V ANN PWR
PIN 3 - ANN GND
PIN 4 - ANN GND
PIN 5 - Transmit +
PIN 6 - Transmit -
PIN 7 - Receive -
PIN 8 - Receive +
PIN 9 - RS-485 COMMON SHIELD

NOTE: PIN OUTS ARE THE SAME FOR BOTH THE INTERIOR AND EXTERIOR ANNUNCIATORS EXCEPT WHERE OTHERWISE NOTED.

RPM8_048-00

Figure 3-21 ANI/ANE CCA Diagram

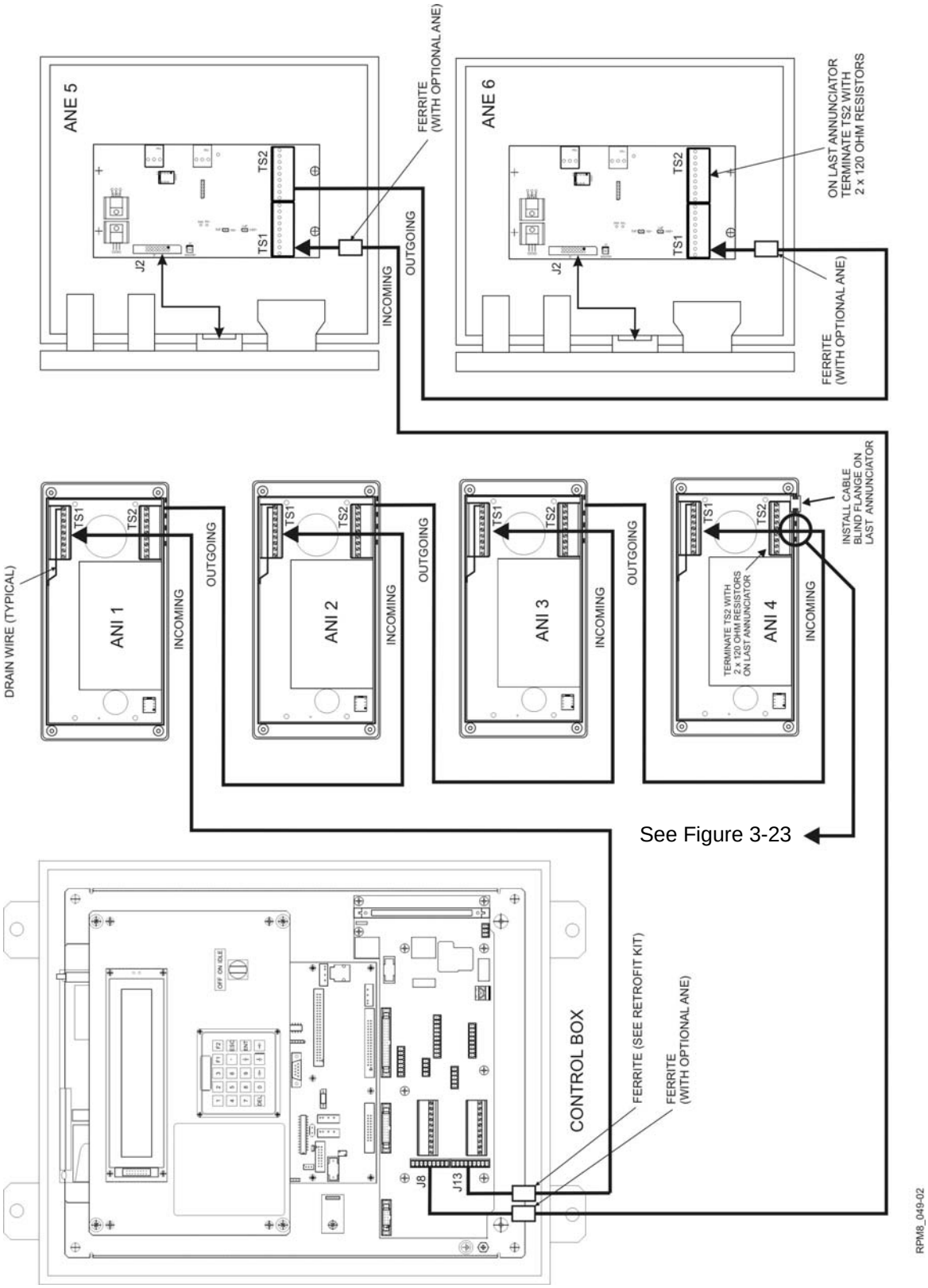

Figure 3-22 ANI/ANE Multiple Annunciator Diagram

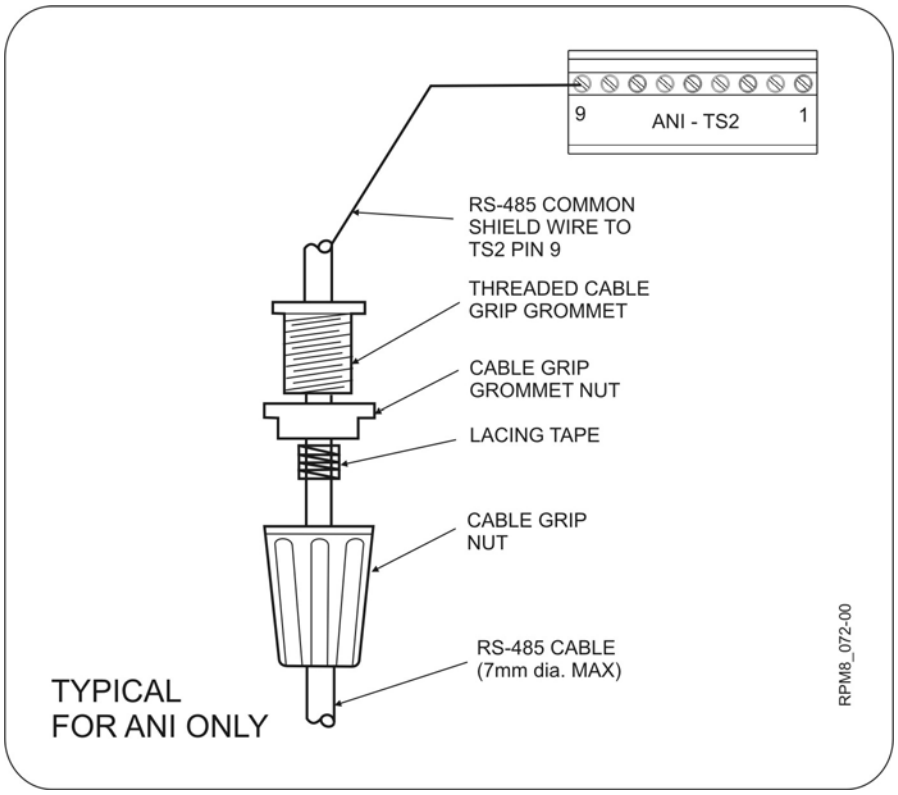

Figure 3-23 ANI Grommet Assembly

4. One CB will support up to six Annunciators in a wire string together in the following configurations:
   - Maximum of six Interior Annunciators (ANI) connected to CB - J13 INT/ANN connector.

   Or

   - Maximum of four ANIs connected to CB - J13 INT/ANN connector and two exterior Annunciators (ANE) connected to CB - J8 EXT/ANN connector.

   Note: The last Annunciator in either Interior or Exterior Wire String must terminate TS2 with two 120ohm resistors as shown in the diagram (even if only one Annunciator is used).
5. Make the Annunciator connections to suit the configuration used, and connect the Annunciators in accordance with the ANI/ANE Multiple Annunciator Diagram.

Install the cable (refer to Table 3-1 for length and specifications) to either the ANI or the optional ANE according to the following procedure:

3.8.2.1 ANI Installation

Install ANI as follows (Refer to Figure 3-21):

1. Remove and retain four machine screws from the ANI case assembly cover.
2. Remove the ANI cover assembly and shielding box cover to gain access to the ANI Annunciator Module CCA.

3. Ensure that the drain (shield) wire is properly soldered to the shielding box and connected to Pin 9 of the Terminal Block (TS1) (Refer to Figure 3-22).
4. Get the cable grip grommet assembly (Refer to Figure 3-23).
5. Route the cable through the cable grip grommet assembly.
6. Strip the cable to the required length.
7. Since the grommet assembly is designed to be used with a variety of cables (to a maximum diameter of 7mm) it is recommended to secure the cable to the grommet assembly with lacing tape, see Figure 3-23 (from any commercially available source; LC 136 Black nylon and dacron flat braided tape MIL-T-43435). Wrap the lacing tape in the same direction that the cable grip nut tightens. Wrap enough tape to allow the cable grip nut to pass over the tape and tighten. Too much tape will interfere with the cable grip nut and too little tape will still allow the cable to slide within the grommet.
8. Snap the grommet into position on the shielding box making sure that the connector is on the incoming side of the ANI. Ensure the fork on the inner shield box is between the flange of the threaded cable grip grommet and the cable grip grommet nut.

   Note: This is required to establish an electrical connection between the grommet and the shielding box.
9. Finger-tighten the cable grip grommet nut to secure the threaded cable grip grommet to the case.
10. Finger-tighten the cable grip nut until the cable is firmly secured and does not slide within the grommet assembly.
11. Connect the cable to the Incoming Terminal Block (TS1) as per the pin outs shown in Figure 3-21.
12. When connecting ANI Annunciators in a wiring string (Refer to Figure 3-22), the incoming cable will attach to TS1 and the cable will be assembled as per steps 3 - 8. The outgoing cable (routed between Annunciators) is connected to TS2 in a similar manner (repeat steps 3 – 8 but insert cable on the outgoing side of the ANI).

    Note: The incoming and outgoing shield drain wires should be twisted together and attached to pin 9 of the Terminal Block TS2 since the shield wire is connected to pin 9 of TS1.
13. Press the 9 pin Terminal Blocks into the terminal block sockets (TS1 and/or TS2) on the ANI CCA.
14. Terminate the TS2 connector for the last ANI in a multiple Annunciator Layout (Refer to Figure 3-22).
15. Get the rubber cable blind flange and install it in the empty outgoing slot for the last ANI (Refer to Figure 3-22).
16. Set the address of each ANI with the DIP switch settings as shown in Figure 3-24:

    Note: Each Annunciator must be set to a unique address. If the optional Exterior Annunciators (ANE) are to be used they will be added to the wiring string of Annunciators and given a unique address amongst them. Figure 3-24 shows the dip switch addresses for either a maximum of six Interior Annunciators (ANI) or up to four Interior Annunciators (ANI) with up to two Exterior Annunciators (ANE) and their associated DIP switch addresses. ***In order to facilitate the instructions, the Annunciators are labeled from ANI or ANE 1 to 6 in the procedures and diagrams, it is not necessary to set the DIP switches in this order. The Annunciators may be setup in any combination, just as long as each Annunciator is set to a unique address.***

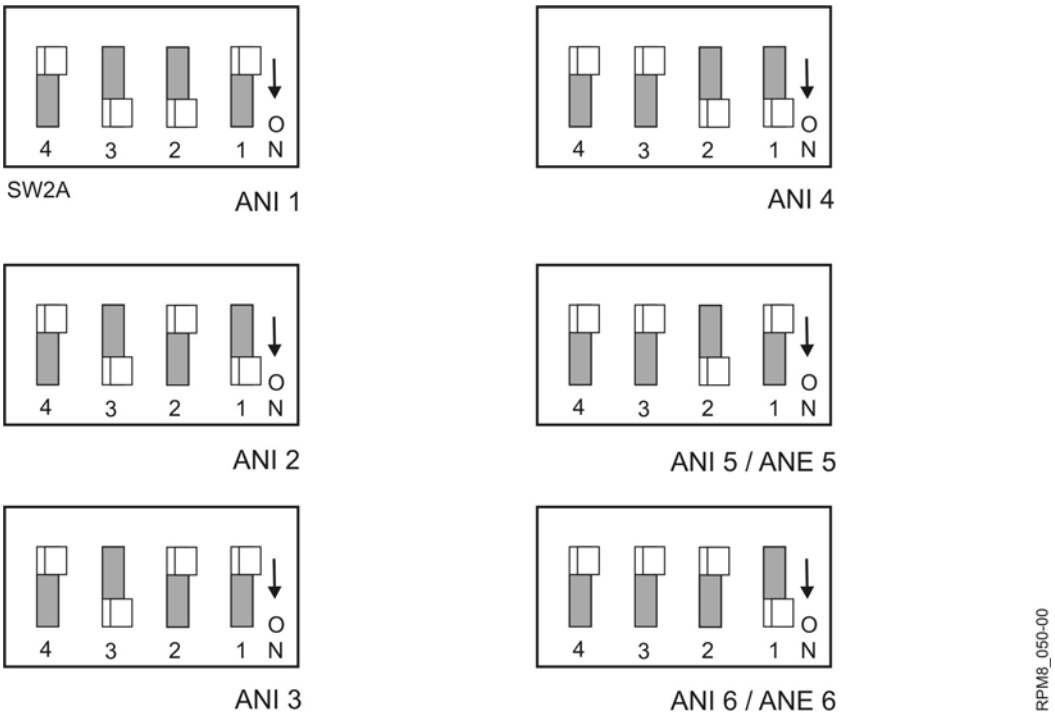

Figure 3-24 Annunciator (ANI/ANE) DIP Switch Settings

17. Replace the shielding box cover and attach the ANI cover assembly with four machine screws.
18. Firmly tighten the cable grip grommet nut with a wrench.
19. Mount the ANI back on the wall.

3.8.2.2 ANE (Optional) Installation

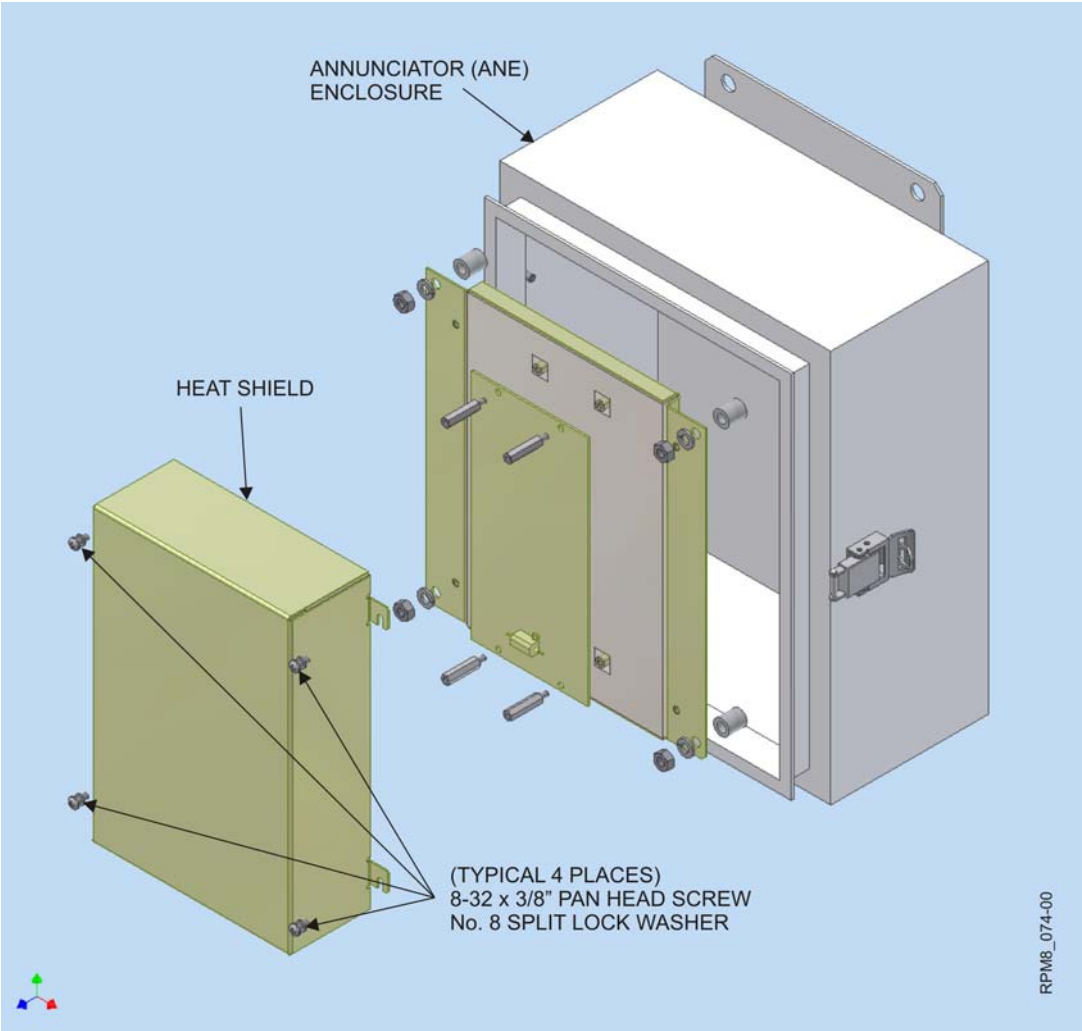

Figure 3-25 Exterior Annunciator (ANE) Assembly

Install ANE as follows (Refer to Figure 3-21):

1. Locate and mount the Exterior Annunciator (ANE) and feed the communication cable (refer to Table 3-1 for lengths and specification) into the ANE enclosure(s).
2. Unlatch and open the cover to gain access to the ANE module CCA.
3. Remove four S.S. 8-32 x 3/8 pan head screws, and four No. 8 split lock washers holding the heat shield in place (refer to Figure 3-25).
4. Remove the heat shield.
5. Connect the incoming cable to the 9 pin Terminal Block for (TS1) according to the pin outs shown on Figure 3-21. Push the Terminal Block onto the socket of TS1 on the ANE CCA.
6. Attach the STEWART Ferrite (PN 16-600-220) to the incoming cable just below the CCA.

7. Terminate the connector (TS2) with 2 x 120 ohm resistors if this is the last ANE, otherwise when connecting the ANE Annunciator in a wiring string, the outgoing cable for ANE 5 will become the incoming cable for ANE 6. Repeat steps 1 to 4 for the incoming cable to connector TS1 of ANE 6 (see Figure 3-22).
8. Connect the outgoing cable for ANE 5 to the 9 pin connector (TS2) according to pin outs shown on Figure 3-21 in a similar manner as step 3 but for TS2.
9. ANE 6 is the last Exterior Annunciator in the chain and the TS2 connector shall be terminated with 2 x 120 ohm resistors (see Figure 3-21 for details).
10. The Exterior Annunciator (ANE) is speaker ready for audio (voice) alerts for all alarms. An external speaker (not provided) can be attached to the speaker terminal block (SPEAKER TS4) as shown below. The Exterior Annunciator (ANE) also supports an alert horn (not provided) which may be attached to the horn terminal block (HORN TS3) as shown below.

    Note: The strip heater is shipped pre-wired to J3 of the ANE CCA.

    Note: When using non-amplified speaker(s) connect speaker wire to pins 2 and 3 of TS4 (ensure the non-amplified speaker impedance is 4 Ohms). If using amplified speaker(s) connect wire from the amplifier to pins 1 and 2 (TS4).

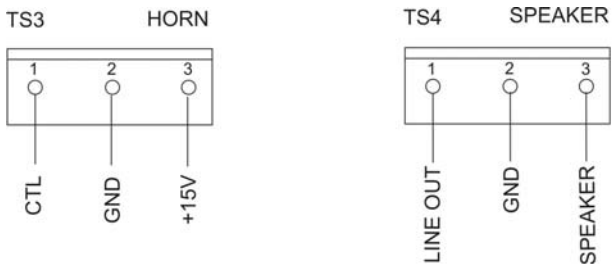

11. Set the address of each ANE with the DIP switches as shown in Figure 3-24.

    Note: Each Annunciator (ANI/ANE) must be set to a unique address using the DIP switch settings.
12. Position the heat shield making certain not to pinch the cables and that the cables clear the cable openings on the heat shield (refer to Figure 3-25).
13. Fasten the heat shield with four No. 8 split lock washers and four S.S. 8-32 x 3/8 pan head screws.

    Note: If (optional) Acknowledge Key Switch is used due to design considerations, replace Acknowledge button with Key Switch and Connect to existing wiring (see Subsection 3.8.2.3 Replace the Acknowledge Button with Key Switch (Optional)).
14. Latch and close the ANE cover.

    Note: Refer to Section 2.3.7 for Annunciator Mounting Instructions.

3.8.2.3 Replace the Acknowledge Button with Key Switch (Optional)

Replace the Acknowledge Button with a momentary key switch as follows:

Note: Replace Button with optional **Momentary Key Switch**

(**IDEC PN HW4K-21BF10 – 2 position, NEMA 4**).

1. Unlatch and open the cover to gain access to the Acknowledge button.
2. Loosen the two screws in the switch assembly that hold the wires in place and remove the wires.
3. Remove the yellow cap (with a flat bladed screwdriver) from the latch that fastens the switch assembly to the button assembly.

4. Turn the latch to the left (counterclockwise) to unlock the switch assembly from the button assembly.
5. Remove the switch assembly.
6. Remove the button assembly with the lock nut and rubber washer from the ANE front cover.
7. Replace the button assembly with the key assembly using the rubber washer and the lock nut to fasten it to the ANE front cover.
8. Position the switch assembly over the key assembly and push into place.
9. Turn the latch to the right (clockwise) to fasten the switch assembly to the key assembly.
10. Replace the yellow cap onto the latch and push down (the clip will snap into place).

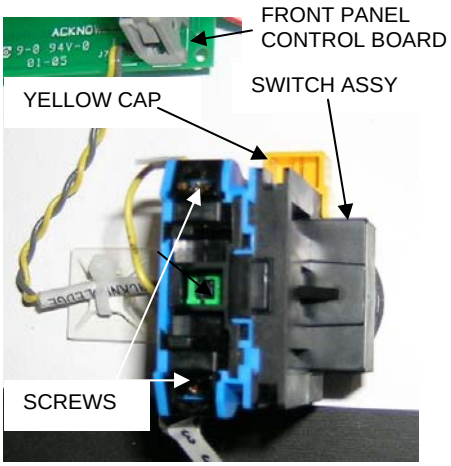

11. Loosen the screws on the switch assembly and position the wires from the Front Panel Control Board (ACKNOWLEDGE) beneath the screws on the switch assembly (grey wire to bottom of switch).
12. Tighten screws on the switch assembly
13. Latch and close the ANE cover.

3.9 Connecting the Supervisory Computer

The Supervisory Computer should consist of the following components, some of which may need to be connected (see Figure 3-26):

- PC-compatible computer, Dual Processor (two CPUs), each CPU at 2.0GHz
- 1GB of RAM
- Two 250GB Hard Drives
- 10/100 Ethernet Network capability
- CD or DVD burner (write-able drive)
- Microsoft® Windows® 2000 Professional Version 5.0, Build 2195, Service Pack 4; or Microsoft® Windows® XP Professional Version 5.1, Service Pack 2 operating system
- Mouse and keyboard
- LCD monitor
- Printer capable of printing a color test sheet in less than 15 seconds
- Uninterruptible Power Supply (UPS).

The Supervisory Computer is connected, via an Ethernet switch (not provided), to the RJ45 connector on the CPU CCA in the CB (as shown in Section 3.3 Connecting the Control Box (CB)). The communications network should operate at a speed of at least 100 Mbps and use the TCP/IP protocol. The network is organized as a private network with fixed IP addresses. Interconnecting network hardware (switches, routers, gateways, hubs, repeaters, etc.) is not supplied. 100Base-F/100Base-T networking equipment is recommended.

There can be up to 32 Control Boxes on the network, with one Supervisory Computer

3.10 Connecting the Monitor Computers

The Monitor Computers should consist of the following components, some of which may need to be connected (see Figure 3-26):

- PC-compatible computer, Dual Processor (two CPUs), each CPU at 2.0GHz
- 1GB of RAM
- Two 250GB Hard Drives
- 10/100 Ethernet Network capability
- CD or DVD burner (write-able drive)
- Microsoft® Windows® 2000 Professional Version 5.0, Build 2195, Service Pack 4; or Microsoft® Windows® XP Professional Version 5.1, Service Pack 2 operating system
- Mouse and keyboard
- LCD monitor
- Printer capable of printing a color test sheet in less than 15 seconds
- Uninterruptible Power Supply (UPS).

The Monitor Computer is connected to the network via the same Ethernet switch (not provided) that connects the Supervisory Computer to the CB. Use shielded CAT 5e cables as specified in Table 3-1 for all connections.

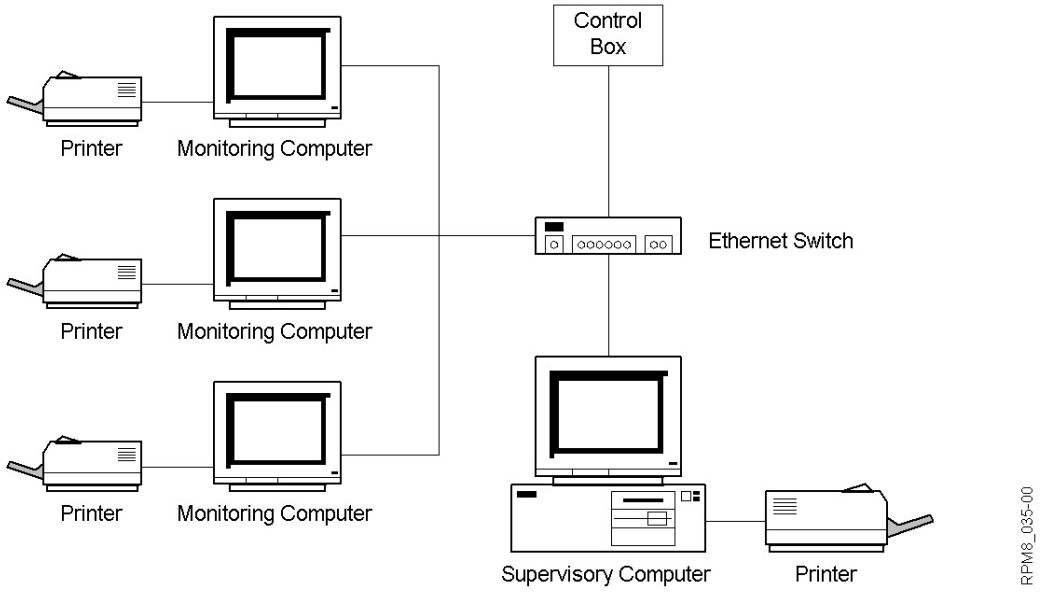

Figure 3-26 Network Interconnect Diagram

There can be up to four Monitor Computers on a network of up to 32 Control Boxes. Interconnecting network hardware (switches, routers, gateways, hubs, repeaters, etc.) is not supplied.

Note: Configure the Control Box (CB), according to RPM8 - Radiation Portal Monitor System, User's Manual –Chapter 2 – System Configuration.

Appendix A System Specifications

A.1 Electrical Specifications

- Battery Box input: 117 VAC, 60 Hz, 3.0 A, Range: 102V – 132V
- Battery Box output: 24 VDC, 5 A Nominal (for 16 panel system) Range: 20V – 36V
- Battery Box Electrical Ratings: 117V, 15 Amps AC
- Battery: Sonnenschein Dryfit A500 series, Model No. A512/40G6

  - Nominal voltage: 12 VDC
  - Capacity: 40 Ah at 2A discharge current
  - Maximum load: 400A

- Control Box input: 24 VDC, 1.0A Nominal, Range: 20V – 36V
- RSP input: 24 VDC, 0.25A Nominal, Range: 18V – 36V
- Interior Annunciator (ANI): 24 VDC, 0.25A Nominal, Range: 16V – 36V
- Exterior Annunciator (ANE) – (Optional): 24 VDC, 0.75A Nominal, Range: 16V – 36V
  - Ext. Speaker – Amplified output: 6W, 4 Ohm
  - Ext. Speaker – Non-amplified output: 300mV, 600 Ohm
  - Ext. Alert Horn output: 15VDC, 200mA

Notes:

- The maximum allowable voltage drop between the CB and the last RSP shall be 2 volts.
- The maximum allowable voltage drop between the CB and the last Annunciator (ANI/ANE) shall be 4 volts.
- The total power consumption of all components shall be a maximum of 320VA at 117VAC.

A.2 Operating Conditions

- AC operating range: 117V Nominal, Range 102V – 132V
- EM Emission: This device complies with FCC Part 15, Subpart B, Class B requirements
- Weather/Corrosion: RSP and Control Box NEMA Type 4X, Battery Box is NEMA Type 3R
- Operating temperature range: -40°C to +55°C
- Humidity: Operation in relative humidity up to 100% meets ANSI N42.35 standard requirements
- EMC: Meets ANSI N42.35 standard requirements

A.3 Fuse Types

Component	Manufacturer	Electrical Ratings	Conformity
F1 – Battery Box, VTT CCA	Littelfuse	15 A, Fast Acting	UL, CSA
F1 to F3 – CB, CBI TRM CCA	Busmann	4 A, 250 VAC	UL
F1 – CB, CBI CCA	Busmann	4 A, 250 VAC	UL

A.4 RPM Support Stand Dimensions

Type I Support Stand

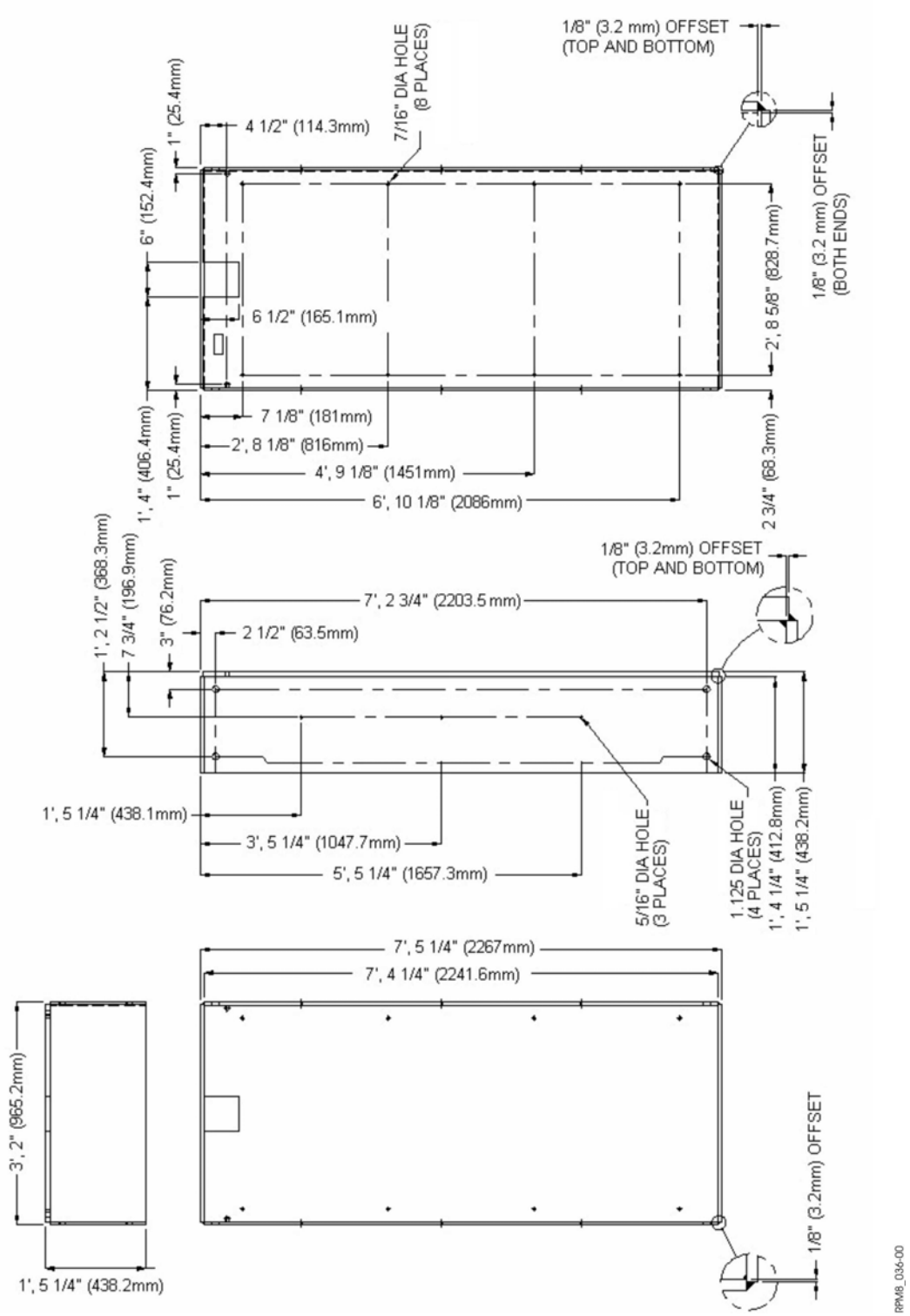

Type II Support Stand

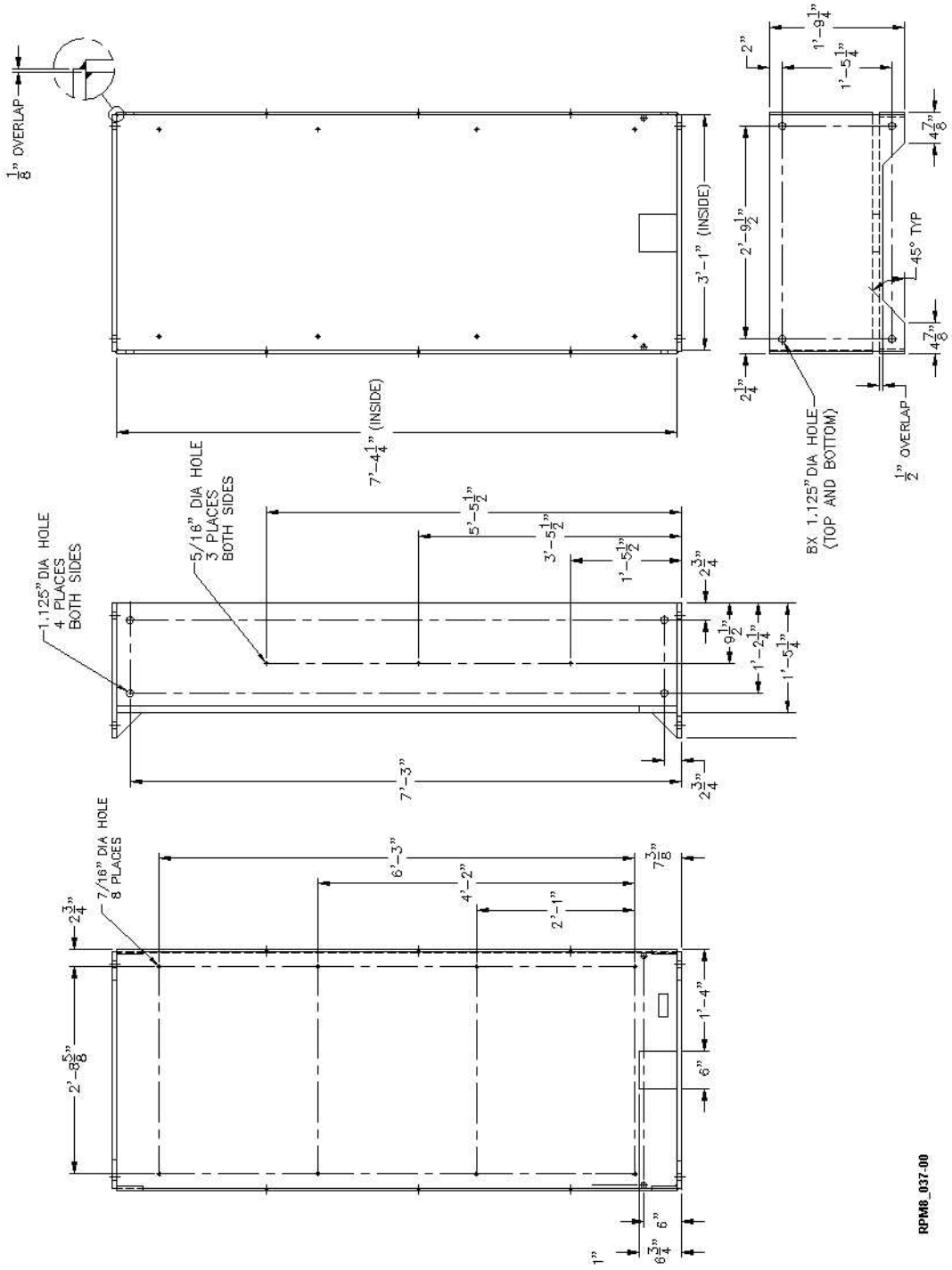

A-5 Engineering Drawings

The following is a list of Engineering drawings pertaining to the build of Type 1 and Type 2/3 Stands:

Note: When Type of Stand is not indicated the drawing is common.

Type 1 Stand fabrication drawing, 21362, Rev E (3 Sheets)

Type 1 Support Foot for Stand fabrication drawing, 21363, Rev A

Type 1 Splice Plate for Stand fabrication drawing, 21364, Rev A

Type 1 Galvanized Hardware Kit for Stand Foot drawing, 21437, Rev A

Type 1 Galvanized Hardware Kit for Stand Splice Plate drawing, 21438, Rev 0

Galvanized Hardware Kit drawing, 21439, Rev 0

Type 2/3 Stand Fabrication drawing, 21353, Rev G (3 Sheets)

Detector Enclosure drawing, 21954 Rev G
- Sheet 3 of 7
- Sheet 4 of 7

Type 1 Stand installation drawing, 21350, Rev F (5 Sheets)

Type 2/3 Stand installation drawing, 21352, Rev F (5 Sheets)

Type 1 Stand Footing Template drawing, 21555, Rev 0

Type 2/3 Stand Footing Template drawing, 21556, Rev 0

RSP Installation Kit for Support Stands, 21935, Rev A (2 Sheets)

Annunciator Mounting Bracket, 36067-1, Rev 0

Optical Sensor Mounting Rail (Unistrut P7000 SS), 36077-1, Rev 0

RFI Filter Circuit Installation Diagram, 21690, Rev B

PNNL O/S Installation, 36259, Rev 0 (2 Sheets)

Appendix B Site Preparation for Support Stand Installation

The instructions provided here describe the typical installation concept that complies with the system design requirements in accordance with the *U.S. Department of Transportation – Federal Highway Administration – Guidelines for the Installation, Inspection, Maintenance and Repair of Structural Supports for Highway Signs, Luminaries, and Traffic Signals* (this manual is available for download at http://www.fhwa.dot.gov/bridge/signinspection.pdf).

The design, specification, handling and the inspection of bolted joints in steel support structures shall be in accordance with the *Specification for Structural Joints Using ASTM A325 or A490 Bolts* dated June, 2000 by the Research Council on Structural Connections (RCSC).

1. The Site Plan showing the location of the Foundation Footings shall be the responsibility of the local Civil Engineer and is subject to local codes, regulations and building code requirements.
2. The concrete forms, positioning and leveling the forms, pouring the concrete and the curing time shall be the responsibility of the Foundation Contractor.
3. Prior to placing the anchor rods into the concrete, an anchor rod rotation test should be run with at least one anchor rod from every lot. Refer to Section 6.8 – Installation of Anchor Rods, *U.S. Department of Transportation – Federal Highway Administration – Guidelines for the Installation, Inspection, Maintenance and Repair of Structural Supports for Highway Signs, Luminaries, and Traffic Signals* for test procedure.
4. Prepare the 1" anchor rods by lubricating the last three inches with beeswax and bolting them to the template (for Type 1 stand see Figure 2-3, for Type 2/3 stand see Figure 2-8) with a leveling nut, two washers and top nut for each (typical four places).

   Note: Use the Footing Template (for Type 1 stand see Figure 2-3, for Type 2/3 stand see Figure 2-8) to accurately position anchor rods in the concrete foundation.
5. Pouring the concrete into the form, vibrating and tamping shall be the responsibility of the Foundation Contractor.
6. Embed the anchor rods into the concrete, and place spacers under the template so the anchor rods protrude a minimum of 4-1/2" above the surface of the concrete footing (a minimum of 5-1/2" if optional jam nuts are used).

   Note: Anchor rods should be installed as a group and should be secured against relative movement and misalignment, according to the bolts hole provided in the template (for Type 1 stand see Figure 2-3, for Type 2/3 stand see Figure 2-8).
7. After 24hrs remove the footing template with the leveling, top nuts and washers.
8. The exposed part of the anchor rods should be cleaned with a wire brush or equivalent and lubricated with beeswax. The anchor rods should be inspected at this time for any visible damage and that the position, elevation and projected length is within tolerances.

   Note: Misalignment from vertical should be no more than 1:40.
9. Allow the anchor rods to set and once the concrete has reached sufficient strength, the anchor rods are ready to be subjected to erection loads.
10. Install the support stand (see Section 2.3.1 for Type 1 Support Stand Installation or Section 2.3.2 for Type 2/3 Support Stand Installation).

Appendix C Touching Up Painted Surfaces

Use the following paint to prevent corrosion:

a) Type 1 and Type 2 Support Stands use OSHA safety yellow touch-up paint:
   - For all states except for New York (NY) and California (CA) use ICI# 349B-9400
   - For NY and CA use ICI# 379H-9400 (Low VOC Formula).

b) Type 3 Support Stands use Carbothane Product 134HG yellow touch-up paint:

   Note: The Type 3 stand is identified by the markings – 'LC-#-###'
   - For all states use # 650198.

c) Spot Prime with Bar-Rust 235H.

Complete this procedure to touchup or repair any paint surface:

1. Remove surface contaminants, such as: oil, grease, mold, and mildew with a solvent cleanser.
2. Remove all surface contaminants, such as loose paint, dirt, foreign matter, and rust with a wire brush.
3. Dull the area surrounding the damaged paint with 80-grit sandpaper.
4. Wipe the surface area with lint free clean cloth to remove dust.
5. Spot prime the area with the recommended primer before applying touchup paint.

   Note: Prime only if bare metal is showing through painted surface.
6. Apply touch up paint (as recommended) to the repair area, in accordance with the paint instructions found on the container.

   CAUTION: Apply paint in accordance with application conditions/equipment, curing schedule, and safety requirements found on the container.

Appendix D Pre-Start - Installation Checklist

These TASKS must be completed before Component Installation begins:

Check that all nuts fastening the Support Stand to the anchor rods and foundation are tightened and the support stand is level and plumb.	☐ Done
If the Cargo/Truck (Type 1 Support Stand) configuration is used, check that all bolts fastening the upper RSP to the lower RSP with the splice plate are tightened and the assembly is secure and inspect the DTI (See Figure 2-6).	☐ Done
If the Cargo/Truck (Type 2/3 Support Stand) configuration is used, check that all bolts fastening the upper RSP to the lower RSP are tightened and inspect the DTI (See Figure 2-10).	☐ Done
Check that all bolts fastening the Control Box to the Unistrut on the RSP 1 support stand are tightened.	☐ Done
Check that all bolts fastening the Battery Box to the Unistrut on the RSP 1 support stand are tightened.	☐ Done
Check that all bolts fastening the Exterior Annunciator (ANE) to the Annunciator bracket, which in turn, is mounted to the Unistrut on the RSP 1 support stand are tightened.	☐ Done
If the Exterior Annunciator (ANE) is mounted in a different location (customer's choice) ensure that all bolts fastening the ANE are tightened.	☐ Done
Ensure that ground rods are installed correctly and that ground wires run from the ground rod to the stand.	☐ Done
If Cargo/Truck systems are used ensure that lightening rods are mounted to the tops and the cable runs to the ground rod and is clamped to the side of the stand.	☐ Done
Ensure that all conduit is routed correctly to the components and that there is sufficient slack to the cable.	☐ Done
Ensure that Interior Annunciators (ANI) are mounted in place and that the cable is routed properly with sufficient slack for connection to either end.	☐ Done
Conduit shall be routed for the Ethernet cable and connected to the Ethernet switchbox with an RJ45 connector.	☐ Done
Cables for other systems such as Ground Loop, Traffic Light Control, Camera Triggers and Vehicle Presence Systems (VPS) shall be routed to the Control Box. (Please refer to documentation provided with the equipment for more information).	☐ Done
The AC power cable is to be routed through conduit and connected by a Certified Electrician from the Battery Box to where the AC power is located to the Battery Box.	☐ Done
All wires are to be routed neatly and clamped securely in place.	☐ Done
Check that all enclosure conduit penetrations are properly sealing.	☐ Done

Appendix E Installation Checklist

For RSPs:

All terminations secure?	☐ Yes	☐ No
VPS positions 1 to 4 verified?	☐ Yes	☐ No
Jumper installed on the final RSP in each series?	☐ Yes	☐ No
Address of each RSP set with the DIP-switches (on SDI CCA)?	☐ Yes	☐ No
All signal leads secure?	☐ Yes	☐ No
UL modifications complete?	☐ Yes	☐ No
Penetration Seal	☐ Yes	☐ No
All paint surfaces are free of damage?	☐ Yes	☐ No

For Control Boxes:

All terminations secure?	☐ Yes	☐ No
Control Box power connections secure and have correct polarity?	☐ Yes	☐ No
State of Health (SOH) connection terminated and plugged in?	☐ Yes	☐ No
Network cable terminated and plugged in?	☐ Yes	☐ No
Annunciator cable terminated and plugged in?	☐ Yes	☐ No
TLC cable terminated and plugged in? (If applicable)	☐ Yes	☐ No
Compact Flash (CF) updated to current software revision?	☐ Yes	☐ No
Control Box configured - RSP/lane assignments set?	☐ Yes	☐ No
CB ID set?	☐ Yes	☐ No
RSPs/detectors activated?	☐ Yes	☐ No
UL modifications complete?	☐ Yes	☐ No
Penetration Seal	☐ Yes	☐ No

For Battery Box:

All terminations secure?	☐ Yes	☐ No
State of Health (SOH) connection terminated and plugged in?	☐ Yes	☐ No
Charger connections secure and have correct polarity?	☐ Yes	☐ No
Battery connections secure and have correct polarity?	☐ Yes	☐ No
Control Box power connections secure and have correct polarity?	☐ Yes	☐ No

For the Annunciator:

Cable terminated and securely connected?	☐ Yes	☐ No

For Vehicle Presence Sensors (VPS):

Correct alignment?	☐ Yes	☐ No
Correct positions?	☐ Yes	☐ No

For the Supervisory Computer:

Supervisory Computer software installed?	☐ Yes	☐ No
Supervisory printer connected?	☐ Yes	☐ No
SQL server installed?	☐ Yes	☐ No
Latest SQL service pack installed?	☐ Yes	☐ No
Latest MS Windows service pack installed?	☐ Yes	☐ No
Monitor adjusted for correct screen resolution (1280 x 1024)?	☐ Yes	☐ No
Correct time zone and regional settings?	☐ Yes	☐ No
Network IP addresses set?	☐ Yes	☐ No
RPMs activated?	☐ Yes	☐ No
Communication between Supervisory Computer and Control Box verified?	☐ Yes	☐ No

For Monitoring Computers:

Monitoring Computer software installed?	☐ Yes	☐ No
Monitoring printer connected?	☐ Yes	☐ No
Latest service pack installed?	☐ Yes	☐ No
Monitor adjusted for correct screen resolution (1280 x 1024)?	☐ Yes	☐ No
Correct time zone and regional settings?	☐ Yes	☐ No
Network IP Addresses set?	☐ Yes	☐ No
Communication between Monitoring Computer and Supervisory Computer verified?	☐ Yes	☐ No

Appendix F Wire Tables

Site Name: _____

CB No.: _____ **Serial No.:** _____

Due to the wide variety of cable choices it becomes increasingly difficult to indicate wire colors in context with the wiring diagrams as shown in this manual. We have provided the following tables to facilitate wiring cables properly. The tables indicate the correct pin to pin connections on both ends of the cable, and a column is provided for the installer to label the pin outs with wire colors of the cable chosen for the particular installation.

Table F-1 – Cable Wiring for RSPs (See Figure 3-15)

SDI TRM CCA (TB1) PIN OUTS	CABLE TYPE: WIRE COLOR	CB TRM CCA ODD/EVEN (TS1/TS2) PIN OUTS
1		1
2		2
3		3
4		4
5		5
6		6
7		8
8		7
9		10
10		9

Table F-2 – Cable Wiring for Annunciators (See Figure 3-20)

CB TRM CCA (J8/J13) PIN OUTS	CABLE TYPE: WIRE COLOR	ANI/ANE (TS1/TS2) PIN OUTS
1		1
2		2
3		3
4		4
5		5
6		6
7		7
8		8
9		9

Pacific Northwest
NATIONAL LABORATORY

Proudly Operated by **Battelle** *Since 1965*

REPRESENTATIONS AND CERTIFICATIONS
Commercial Items

For the Pacific Northwest National Laboratory
Operated by Battelle Memorial Institute

Battelle Memorial Institute has executed and is engaged in the performance of Prime Contract DE-AC05-76RL01830 with the United States Department of Energy (DOE), for the management, operation, and maintenance of the Pacific Northwest National Laboratory (PNNL) in Richland, Washington. The following representations and certifications must be completed, and this form must be signed and returned with the Offeror's proposal.

Name and DUNS Number

Individual/Company Name

"Doing Business As" (DBA) _____

DUNS Number _____

Taxpayer Identification *(cl. 405 - Oct 1998)*

A. Definitions

"Common Parent," as used in this solicitation provision, means that corporation entity owns or controls an affiliated group of corporation that files its Federal income tax returns on a consolidated basis, and of which the offeror is a member.

"Taxpayer Identification Number (TIN)," as used in this provision, means the number required by the Internal Revenue Service (IRS) to be used by the offeror in reporting income tax and other returns. The TIN may be either a Social Security Number or an Employee Identification Number.

B. All offerors must submit the information required in Paragraphs D through F of this provision to comply with debt collection requirements of 31 U.S.C. 7701(c) and 3325(d), reporting requirements of 26 U.S.C. 6041, 6041A, and 6050M and implementing regulations issued by the IRS. If the resulting contract is subject to the reporting requirements described in Federal Acquisition Regulation (FAR) 4.904, the failure or refusal by the offeror to furnish the information may result in a 31 percent reduction of payments otherwise due under the contract.

C. The TIN may be used by the Government to collect and report on any delinquent amounts arising out of the offeror's relationship with the government (31 U.S.C. 7701(c)(3)). If the resulting contract is subject to the payment reporting requirements described in FAR 4.904, the TIN provided hereunder may be matched with IRS records to verify the accuracy of the offeror's TIN.

D. *Taxpayer Identification Number (TIN)*

TIN:

TIN has been applied for.

TIN is not required because _____

Offeror is a nonresident alien, foreign corporation, or foreign partnership that does not have income effectively connected with the conduct of trade or business in the United States and does not have an office or place of business or a fiscal paying agent in the United States.

Offeror is an agency or instrumentality of a foreign government

Offeror is an agency or instrumentality of a Federal Government

Other. State basis. _____

E. *Type of Organization*

Sole proprietorship

Partnership

Corporate entity (not tax-exempt)

Corporate entity (tax-exempt)

Government entity (Federal, State, or local)

Foreign government

International organization per 26 CFR 1.6049-4

Other

F. *Common Parent*

Offeror is not owned or controlled by a common parent as defined in paragraph (a) of this provision.

Name and TIN of common parent: Name _____ TIN _____

Offeror, its parent company, or subsidiaries, is/has been owned or controlled by a foreign entity. If so, provide the following information:

Name of Parent Company _____

Main Office Address _____

G. *Other*

Foreign organization is headquarter in _____ (country)

Company ◯ is, ◯ is not publicly traded

Small Business Program Representations *(cl. 407 - Oct 2011)*

(Applicable if any performance will be inside the United States or its outlying areas.)

A. 1. The North American Industry Classification System (NAICS) code for this acquisition is 236220.

2. The small business size standard is 36.5M.

3. The small business size standard for a concern which submits an offer in its own name, other than on a construction or service contract, but which proposes to furnish a product which it did not itself manufacture, is 500 employees.

B. *Representations.*

1. The offeror represents as part of its offer that it ◯ is, ◯ is not a small business concern.

(Complete 2-8 below, as applicable, only if the offeror represented itself as a small business concern in paragraph B.1. of this provision.)

2. The offeror represents, for general statistical purposes, that it ◯ is, ◯ is not, a small disadvantaged business concern as defined in 13 CFR 124.1002. *(If so, also complete the Small Disadvantaged Business Status representation, below.)*

3. The offeror represents as part of its offer that it ◯ is, ◯ is not a women-owned small business concern.

4. [*Complete only if the offeror represented itself as a women-owned small business concern in Paragraph B.3. of this provision.*] Women-owned small business (WOSB) concern eligible under the WOSB Program.

The offeror represents as part of its offer that—

a. It ◯ is, ◯ is not a WOSB concern eligible under the WOSB Program, has provided all the required documents to the WOSB Repository, and no change in circumstances or adverse decisions have been issued that affects its eligibility; and

b. It ◯ is, ◯ is not a joint venture that complies with the requirements of 13 CFR part 127, and the representation in Paragraph B.4.a. of this provision is accurate in reference to the WOSB concern or concerns that are participating in the joint venture. [*The offeror shall enter the name or names of the WOSB concern or concerns that are participating in the joint venture:*

_____. *Each WOSB concern participating in the joint venture shall submit a separate signed copy of the WOSB representation.*

5. [*Complete only if the offeror represented itself as a women-owned small business concern eligible under the WOSB Program in Paragraph B.4. of this provision.*] Economically disadvantaged women-owned small business (EDWOSB) concern. The offeror represents as part of its offer that—

a. It ◯ is, ◯ is not an EDWOSB concern eligible under the WOSB Program, has provided all the required documents to the WOSB Repository, and no change in circumstances or adverse decisions have been issued that affects its eligibility; and

b. It ◯ is, ◯ is not a joint venture that complies with the requirements of 13 CFR part 127, and the representation in Paragraph B.5.a. of this provision is accurate in reference to the EDWOSB concern or concerns that are participating in the joint venture. [*The offeror shall enter the name or names of the EDWOSB concern or concerns that are participating in the joint venture:*

_____. *Each EDWOSB concern participating in the joint venture shall submit a separate signed copy of the EDWOSB representation.*

6. The offeror represents as part of its offer that it ◯ is, ◯ is not a veteran-owned small business concern.

7. The offeror represents as part of its offer that it ◯ is, ◯ is not a service-disabled veteran-owned small business concern.

8. The offeror represents, as part of its offer, that—

a. It ◯ is, ◯ is not a HUBZone small business concern listed, on the date of this representation, on the List of Qualified HUBZone Small Business Concerns maintained by the Small Business

Administration, and no material change in ownership and control, principal office, or HUBZone employee percentage have occurred since it was in accordance with 13 CFR part 126; and

b. It ◯ is, ◯ is not a HUBZone joint venture that complies with the requirements of 13 CFR part 126, and the representation in paragraph B.6.a. of this provision is accurate for the HUBZone small business concern that are participating in the HUBZone joint venture.

[*The offeror shall enter the name or names of the HUBZone small business concern or concerns that are participating in the joint venture*:]

Each HUBZone small business concern participating in the joint venture shall submit a separate signed copy of the HUBZone representation.

C. *Definitions*. As used in this provision ...

"Economically disadvantaged women-owned small business (EDWOSB) concern" means a small business concern that is at least 51 percent directly and unconditionally owned by, and the management and daily business operations of which are controlled by, one or more women who are citizens of the United States and who are economically disadvantaged in accordance with 13 CFR part 127. It automatically qualifies as a women-owned small business concern eligible under the WOSB Program.

"Service-disabled veteran-owned small business concern"—

1. Means a small business concern (a) Not less than 51 percent of which is owned by one or more service-disabled veterans or, in the case of any publicly owned business, not less than 51 percent of the stock of which is owned by one or more service-disabled veterans; and (b) The management and daily business operations of which are controlled by one or more service-disabled veterans or, in the case of a service-disabled veteran with permanent and severe disability, the spouse or permanent caregiver of such veteran.
2. Service-disabled veteran means a veteran, as defined in 38 U.S.C. 101(2), with a disability that is service-connected, as defined in 38 U.S.C. 101(16).

"Small business concern" means a concern, including its affiliates, that is independently owned and operated, not dominant in the field of operation in which it is bidding on Government contracts, and qualified as a small business under the criteria in 13 CFR part 121 and the size standard in Paragraph A of this provision.

"Veteran-owned small business concern" means a small business concern—

1. Not less than 51 percent of which is owned by one or more veterans (as defined at 38 U.S.C. 101(2)) or, in the case of any publicly owned business, not less than 51 percent of the stock of which is owned by one or more veterans; and
2. The management and daily business operations of which are controlled by one or more veterans.

"Women-owned small business concern" means a small business concern—

1. That is at least 51 percent owned by one or more women; or, in the case of any publicly owned business, at least 51 percent of the stock of which is owned by one or more women; and
2. Whose management and daily business operations are controlled by one or more women.

D. *Notice*.

1. If this solicitation is for supplies and has been set aside, in whole or in part, for small business concerns, then the clause in this solicitation providing notice of the set-aside contains restrictions on the source of the end items to be furnished.
2. Under 15 U.S.C. 645(d), any person who misrepresents a firm's status as a small, HUBZone small, small disadvantaged, or women-owned small business concern in order to obtain a contract to be awarded under the preference programs established pursuant to section 8(a), 8(d), 9, or 15 of the Small Business Act or any other provision of Federal law that specifically references section 8(d) for a definition of program eligibility, shall— (i) Be punished by imposition of fine, imprisonment, or both; (ii) Be subject to administrative remedies, including suspension and debarment; and (iii) Be ineligible for participation in programs conducted under the authority of the Act.

Alaska Native Corporation or Indian Tribe Representation *(cl. 407A - Feb 2011)*

In accordance with FAR 52.219-9(d)(1)(i), subcontracts awarded to an Alaska Native Corporation (ANC) or Indian tribe may be counted towards subcontracting goals for small business and small disadvantaged business concerns regardless of the size or Small Business Administration certification of the ANC or Indian tribe. As defined by FAR 52.219-9(b), the offeror represents that it –

◯ is ◯ is not an Alaska Native Corporation

◯ is ◯ is not an Indian tribe

Employment Eligibility Verification *(cl. 421 - Oct 2011)*

(Applicable to proposals exceeding $3,000)

Offeror represents that—

E-Verify is not applicable based on paragraph (e) of FAR 52.222-54 Employment Eligibility Verification.

◯ it is ◯ it is not currently enrolled in E-Verify.

if not currently enrolled, it will enroll in E-Verify within 30 calendar days of subcontract award.

it will include FAR 52.222-54 in applicable lower-tier subcontracts.

Affirmative Action Compliance *(cl. 409 - Apr 1984)*

The offeror represents that it –

◯ has developed and has on file,

◯ has not developed and does not have on file, at each establishment, affirmative action programs required by the rules and regulations of the Secretary of Labor (41 CFR 60-1 and 60-2); or

◯ has not previously had contracts subject to the written affirmative action programs requirement of the rules and regulations of the Secretary of Labor.

Previous Contracts and Compliance Reports *(cl. 408 - Feb 1999)*

Offeror represents that it—

◯ has ◯ has not participated in a previous contract or subcontract subject the Equal Opportunity clause of this solicitation;

◯ Has ◯ has not filed all required compliance reports; and

Representations indicating submission of required compliance reports, signed by proposed subcontractors, will be obtained before subcontract awards.

Royalty Payment Certification *(cl. 414 - Jan 1986)*

In order that the U.S. Department of Energy may be informed regarding royalty payments to be made by a contractor in connection with any acquisition, construction, or operation where the amount of the royalty payment is reflected in the contract price, or is to be reimbursed by Battelle, check one of the following:

The Contract price includes no amount representing the payment of royalty by the Offeror directly to others in connection with the performance of the contract.

The Contract price includes an amount for royalty payment expected to be made in connection with the proposed award set forth below:

1. the amount of each payment,
2. the names of the licensor, and
3. either the patent numbers involved or such other information as will permit identification of the patents and patent applications and the basis on which royalties will be paid.

Buy American Act Certificate *(cl. 410 - Feb 2009)*

A. The offeror certifies that each end product, except those listed in Paragraph B of this provision, is a domestic end product and that for other than COTS items, the offeror has considered components of unknown origin to have been mined, produced, or manufactured outside the United States. The offeror shall list as foreign end products those end products manufactured in the United States that do not qualify as domestic end products, *i.e.*, an end product that is not a COTS item and does not meet the component test in Paragraph 2 of the definition of "domestic end product." The terms "commercially available off-the-shelf (COTS) item," "component," "domestic end product," "end product," "foreign end product," and "United States" are defined in the clause of this solicitation entitled "Buy American Act—Supplies."

B. Foreign End Products:

Line Item No.	Country of Origin

C. Offers will be evaluated in accordance with the policies and procedures of Part 25 of the Federal Acquisition Regulation.

Export Control *(cl. 422 - July 2012)*

(Required for all proposals of Equipment, Tools, Software or Technology)

The Offeror represents that the property has an Export Control requirement that is described in either of the following regulations:

A. An International Traffic in Arms Regulations (ITAR) United States Munitions List (USML) Category

Manufacturer Name _____
Model Number _____
Description _____
USML Category # _____

B. An Export Administrations Regulations (EAR) Export Control Classification Number (ECCN);

Manufacturer Name _____
Model Number _____
Description _____
ECCN # _____ (e.g. 1A001...NOT the Harmonizing Code)

Note: Prior to the delivery of equipment, tools, software or technology, the successful contractor must provide the ECCN for each item to the PNNL Property Office at pnnl.property@pnnl.gov.

Certification Regarding Responsibility Matters *(cl. 419 - April 2010)*

A. The Offeror certifies, to the best of its knowledge and belief, that—

1. The Offeror and/or any of its Principals—

○ are ○ are not presently debarred, suspended, proposed for debarment, or declared ineligible for the award of contracts by any Federal agency;

○ have ○ have not within a three-year period preceding this offer, been convicted of or had a civil judgment rendered against them for: commission of fraud or a criminal offense in connection with obtaining, attempting to obtain, or performing a public (Federal, state, or local) contract or subcontract; violation of Federal or state antitrust statutes relating to the submission of offers; or commission of embezzlement, theft, forgery, bribery, falsification or destruction of records, making false statements, tax evasion, violating Federal criminal tax laws, or receiving stolen property;

○ are ○ are not presently indicted for, or otherwise criminally or civilly charged by a governmental entity with, commission of any of the offenses enumerated in Paragraph A.1.a.ii. of this provision;

○ have ○ have not within a three-year period preceding this offer, been notified of any delinquent Federal taxes in an amount that exceeds $3,000 for which the liability remains unsatisfied.

a. Federal taxes are considered delinquent if both of the following criteria apply:

i. *The tax liability is finally determined*. The liability is finally determined if it has been assessed. A liability is not finally determined if there is a pending administrative or judicial challenge. In the case of a judicial challenge to the liability, the liability is not finally determined until all judicial appeal rights have been exhausted.

ii. *The taxpayer is delinquent in making payment*. A taxpayer is delinquent if the taxpayer has failed to pay the tax liability when full payment was due and required. A taxpayer is not delinquent in cases where enforced collection action is precluded.

b. *Examples*.

- The taxpayer has received a statutory notice of deficiency, under I.R.C. § 6212, which entitles the taxpayer to seek Tax Court review of a proposed tax deficiency. This is not a delinquent tax because it is not a final tax liability. Should the taxpayer seek Tax Court review, this will not be a final tax liability until the taxpayer has exercised all judicial appeal rights.
- The IRS has filed a notice of Federal tax lien with respect to an assessed tax liability, and the taxpayer has been issued a notice under I.R.C. § 6320 entitling the taxpayer to request a hearing with the IRS Office of Appeals contesting the lien filing, and to further appeal to the Tax Court if the IRS determines to sustain the lien filing. In the course of the hearing, the taxpayer is entitled to contest the underlying tax liability because the taxpayer has had no prior opportunity to contest the liability. This is not a delinquent tax because it is not a final tax liability. Should the taxpayer seek tax court review, this will not be a final tax liability until the taxpayer has exercised all judicial appeal rights.
- The taxpayer has entered into an installment agreement pursuant to I.R.C. § 6159. The taxpayer is making

timely payments and is in full compliance with the agreement terms. The taxpayer is not delinquent because the taxpayer is not currently required to make full payment.

- The taxpayer has filed for bankruptcy protection. The taxpayer is not delinquent because enforced collection action is stayed under 11 U.S.C. 362 (the Bankruptcy Code).

c. The Offeror ◯ has, ◯ has not, within a three-year period preceding this offer, had one or more contracts terminated for default by any Federal agency.

2. "Principal," for the purposes of this certification, means an officer, director, owner, partner, or a person having primary management or supervisory responsibilities within a business entity (*e.g.*, general manager; plant manager; head of a subsidiary, division, or business segment; and similar positions).

This Certification Concerns a Matter Within the Jurisdiction of an Agency of the United States and the Making of a False, Fictitious, or Fraudulent Certification May Render the Maker Subject to Prosecution Under Section 1001, Title 18, United States Code.

B. The Offeror shall provide immediate written notice to the Battelle Contracts Representative if, at any time prior to contract award, the Offeror learns that its certification was erroneous when submitted or has become erroneous by reason of changed circumstances.

C. A certification that any of the items in Paragraph A of this provision exists will not necessarily result in withholding of an award under this solicitation. However, the certification will be considered in connection with a determination of the Offeror's responsibility. Failure of the Offeror to furnish a certification or provide such additional information as requested by the Battelle Contracts Representative may render the Offeror nonresponsible.

D. Nothing contained in the foregoing shall be construed to require establishment of a system of records in order to render, in good faith, the certification required by Paragraph A of this provision. The knowledge and information of an Offeror is not required to exceed that which is normally possessed by a prudent person in the ordinary course of business dealings.

E. The certification in Paragraph A of this provision is a material representation of fact upon which reliance was placed when making award. If it is later determined that the Offeror knowingly rendered an erroneous certification, in addition to other remedies available to Battelle, the Battelle Contracts Representative may terminate the contract resulting from this solicitation for default.

Certification and Disclosure Regarding Payments to Influence Certain Federal Transactions *(cl. 404 - Oct 2010)*

(Applicable to proposals exceeding $150,000)

A. *Definitions.* As used in this provision—"Lobbying contact" has the meaning provided at 2 U.S.C. 1602(8). The terms "agency," "influencing or attempting to influence," "officer or employee of an agency," "person," "reasonable compensation," and "regularly employed" are defined in the FAR clause of this solicitation entitled "Limitation on Payments to Influence Certain Federal Transactions" (52.203-12).

B. *Prohibition.* The prohibition and exceptions contained in the FAR clause of this solicitation entitled "Limitation on Payments to Influence Certain Federal Transactions" (52.203-12) are hereby incorporated by reference in this provision.

C. *Certification.* The offeror, by signing its offer, hereby certifies to the best of its knowledge and belief that no Federal appropriated funds have been paid or will be paid to any person for influencing or attempting to influence an officer or employee of any agency, a Member of Congress, an officer or employee of Congress, or an employee of a Member of Congress on its behalf in connection with the awarding of this contract.

D. *Disclosure.* If any registrants under the Lobbying Disclosure Act of 1995 have made a lobbying contact on behalf of the offeror with respect to this contract, the offeror shall complete and submit, with its offer, OMB Standard Form LLL, Disclosure of Lobbying Activities, to provide the name of the registrants. The offeror need not report regularly employed officers or employees of the offeror to whom payments of reasonable compensation were made.

E. *Penalty.* Submission of this certification and disclosure is a prerequisite for making or entering into this contract imposed by 31 U.S.C. 1352. Any person who makes an expenditure prohibited under this provision or who fails to file or amend the disclosure required to be filed or amended by this provision, shall be subject to a civil penalty of not less than $10,000, and not more than $100,000, for each such failure.

Code of Business Ethics and Conduct *(cl. 406 - Oct 2011)*

By submission of this offer, the offeror certifies that it conducts its business fairly, impartially, and in an ethical and proper manner. The offeror also certifies that it maintains a Code of Business Ethics and Conduct and adheres to its terms. The offeror agrees, in consideration of the opportunity to propose on this requirement, that the offeror shall immediately report all unethical or improper conduct by the offeror or Buyer's agents in connection with this solicitation or the resulting contract to the U.S. Department of Energy, Office of Inspector General, and the Battelle Contracts Representative.

Combating Trafficking in Persons *(cl. 423 -Mar 2015)*

(Applicable to proposals exceeding $500,000 for supplies, other than commercially available off-the-shelf items, acquired outside the United States, or services to be performed outside the United States)

1. The Offeror certifies, to the best of their knowledge and belief, that it-

◯ has ◯ has not implemented a compliance plan to prevent any prohibited activities identified in FAR 52.222-50, paragraph (b), and to monitor, detect and terminate any agent, subcontract, or subcontractor employee engaging in prohibited activities.

2. The Offeror certifies, to the best of their knowledge and belief, that -

neither the offeror nor any of its agents, subcontractors, or their agents is engaged in such activities; OR

if abuses relating to any of the prohibited activities identified in FAR 52.222-50, paragraph (b) have been found, the offeror has taken the appropriate remedial and referral actions.

SIGNATURE

Note: A person authorized to make legally binding commitments on behalf of the offeror must sign below. Signature constitutes a representation that reasonable and prudent inquiry has been made to ascertain the true and accurate basis of all statements. Statements which a person knows or has reason to know are false, fictitious, or fraudulent may result in criminal or civil penalties, as prescribed in 18 USC 1001 and 31 USC 3802(a)(2). These Representations and Certifications shall remain in effect for a period of one (1) year from the date signed and shall satisfy any subsequent proposal requirements during that one-year period. The Offeror shall notify Battelle of any changes that occur in any of the representation or certifications during that period.

Authorized Signature _____

Signer's Name (Printed) _____

Title _____

Date _____

General Decision Number: WA160038 09/02/2016 WA38

Superseded General Decision Number: WA20150038

State: Washington

Construction Type: Building

County: Pierce County in Washington.

BUILDING CONSTRUCTION PROJECTS (does not include single family homes or apartments up to and including 4 stories).

Note: Under Executive Order (EO) 13658, an hourly minimum wage of $10.15 for calendar year 2016 applies to all contracts subject to the Davis-Bacon Act for which the solicitation was issued on or after January 1, 2015. If this contract is covered by the EO, the contractor must pay all workers in any classification listed on this wage determination at least $10.15 (or the applicable wage rate listed on this wage determination, if it is higher) for all hours spent performing on the contract in calendar year 2016. The EO minimum wage rate will be adjusted annually. Additional information on contractor requirements and worker protections under the EO is available at www.dol.gov/whd/govcontracts.

Modification Number	Publication Date
0	01/08/2016
1	03/25/2016
2	04/22/2016
3	05/13/2016
4	06/24/2016
5	07/08/2016
6	07/15/2016
7	07/29/2016
8	09/02/2016

ASBE0007-002 06/01/2016

	Rates	Fringes
ASBESTOS WORKER/HEAT & FROST INSULATOR	$ 48.46	14.97

BRWA0001-011 06/01/2015

	Rates	Fringes
Bricklayers, Caulkers	$ 37.54	14.77

CARP0770-020 06/01/2015

	Rates	Fringes
CARPENTER (Acoustical Installation)	$ 40.36	13.66
CARPENTER (Including Formwork, Drywall Hanging, Cabinet Installation; Insulator-Batt and Metal Stud Installation)	$ 40.36	13.66
MILLWRIGHT	$ 41.86	13.66
PILEDRIVERMAN	$ 40.61	13.66

(HOURLY ZONE PAY: WESTERN AND CENTRAL WASHINGTON - ALL CLASSIFICATIONS EXCEPT MILLWRIGHTS AND PILEDRIVERS

Hourly Zone Pay shall be paid on jobs located outside of the free zone computed from the city center of the following listed cities:

Seattle	Olympia	Bellingham
Auburn	Bremerton	Anacortes
Renton	Shelton	Yakima
Aberdeen-Hoquiam	Tacoma	Wenatchee
Ellensburg	Everett	Port Angeles
Centralia	Mount Vernon	Sunnyside
Chelan	Pt. Townsend	

Zone Pay:

0 -25 radius miles	Free
26-35 radius miles	$1.00/hour
36-45 radius miles	$1.15/hour
46-55 radius miles	$1.35/hour
Over 55 radius miles	$1.55/hour

(HOURLY ZONE PAY: WESTERN AND CENTRAL WASHINGTON - MILLWRIGHT AND PILEDRIVER ONLY)

Hourly Zone Pay shall be computed from Seattle Union Hall, Tacoma City center, and Everett City center

Zone Pay:

0 -25 radius miles	Free
26-45 radius miles	$ .70/hour
Over 45 radius miles	$1.50/hour

ELEC0076-005 09/01/2015

	Rates	Fringes
ELECTRICIAN	$ 35.42	23.92

ELEC0076-006 06/01/2015

Rates Fringes

ELECTRICIAN (Alarm
Installation Only).....$ 25.90 12.55
ELECTRICIAN (Low Voltage
Wiring Only).....$ 25.90 12.55

ELEV0019-005 01/01/2014

Rates Fringes

ELEVATOR MECHANIC.....$ 47.76 27.085+a+b

FOOTNOTE:
a. Employer contributes 8% of the basic hourly rate for over 5 year's service and 6% of the basic hourly rate for 6 months to 5 years' of service as vacation paid credit.
b. Eight paid holidays: New Year's Day; Memorial Day; Independence Day; Labor Day; Veteran's Day; Thanksgiving Day; Friday after Thanksgiving and Christmas Day

---
ENGI0612-015 06/01/2014

Rates Fringes

POWER EQUIPMENT OPERATOR
GROUP 1A.....$ 38.39 17.40
GROUP 1AA.....$ 38.96 17.40
GROUP 1AAA.....$ 39.52 17.40
GROUP 1.....$ 37.84 17.40
GROUP 2.....$ 37.35 17.40
GROUP 3.....$ 36.93 17.40
GROUP 4.....$ 34.57 17.40

Zone Differential (Add to Zone 1 rates):
Zone 2 (26-45 radius miles) = $1.00
Zone 3 (Over 45 radius miles) - $1.30

BASEPOINTS: CENTRALIA, OLYMPIA, TACOMA

POWER EQUIPMENT OPERATORS CLASSIFICATIONS

GROUP 1AAA - Cranes-over 300 tons, or 300 ft of boom (including jib with attachments)

GROUP 1AA - Cranes 200 to 300 tons, or 250 ft of boom (including jib with attachments); Excavator/Trackhoe: Over 90 metric tons

GROUP 1A - Cranes, 100 tons thru 199 tons, or 150 ft of boom (including jib with attachments); Excavator/Trackhoe: over 50 metric tons to 90 metric tons

GROUP 1 - Cranes 45 tons thru 99 tons, under 150 ft of boom (including jib with attachments); Excavator/Trackhoe: over 30 metric tons to 50 metric tons; Screedman; Scrapers: 45 yards and over; Grader/Blade

GROUP 2 - Cranes, 20 tons thru 44 tons with attachments; Drilling machine; Excavator/Trackhoe: 15 to 30 metric tons; Horizontal/directional drill operator; Compactor; Scraper: under 45 tons

GROUP 3 - Cranes-thru 19 tons with attachments; Motor patrol grader-nonfinishing; Roller-Plant Mix; Excavator/Trackhoe: under 15 metric tons; Forklift: 3000 lbs and over with attachments; Service Oiler; Concrete Pump; Outside Hoist (Elevators and Manlifts); Pump Grout

GROUP 4 - Roller-other than plant mix; Forklift: under 3000 lbs with attachments; Bobcat/Skid Loader

HANDLING OF HAZARDOUS WASTE MATERIALS: Personnel in all craft classifications subject to working inside a federally designated hazardous perimeter shall be elgible for compensation in accordance with the following group schedule relative to the level of hazardous waste as outlined in the specific hazardous waste project site safety plan.

H-1 Base wage rate when on a hazardous waste site when not outfitted with protective clothing, Class "D" Suit - Base wage rate plus $ .50 per hour.

H-2 Class "C" Suit - Base wage rate plus $1.00 per hour.

H-3 Class "B" Suit - Base wage rate plus $1.50 per hour.

H-4 Class "A" Suit - Base wage rate plus $2.00 per hour.

IRON0086-010 07/01/2016

	Rates	Fringes
IRONWORKER (Reinforcing, Structural and Ornamental).....	$ 40.52	24.71

LABO0001-016 06/01/2014

ZONE 1:

	Rates	Fringes
Laborers:		
GROUP 2.....	$ 25.79	10.30
GROUP 3.....	$ 32.29	10.30
GROUP 4.....	$ 33.08	10.30

GROUP 5.....$ 33.62 10.30

ZONE DIFFERENTIAL (ADD TO ZONE 1 RATES):
ZONE 2 - $1.00
ZONE 3 - $1.30

BASE POINTS: BELLINGHAM, MT. VERNON, EVERETT, SEATTLE, KENT, TACOMA, OLYMPIA, CENTRALIA, ABERDEEN, SHELTON, PT. TOWNSEND, PT. ANGELES, AND BREMERTON

ZONE 1 - Projects within 25 radius miles of the respective city hall
ZONE 2 - More than 25 but less than 45 radius miles from the respective city hall
ZONE 3 - More than 45 radius miles from the respective city hall

LABORERS CLASSIFICATIONS

GROUP 2: Flagman

GROUP 3: General Laborer; Mason Tender-Cement/Concrete; Chipping Gun (under 30 lbs.); Form Stripping; Roof Tearoff

GROUP 4: Chipping Gun (over 30 lbs.); Concrete Saw Operator; Grade Checker; Gunite; Pipe Layer; Vibrating Plate

GROUP 5: Mason Tender-Brick

---

* PAIN0005-029 07/01/2016

Rates Fringes

DRYWALL FINISHER/TAPER.....$ 38.65 16.61

PAIN0005-030 07/01/2013

Rates Fringes

Painters:
Parking Lot and Highway
Striping Only.....$ 28.00 14.33

PAIN0005-031 07/01/2016

Rates Fringes

PAINTER (Including Brush,
Roller, Spray and Prep Work).....$ 28.99 11.34

PAIN0005-034 01/01/2011

Rates Fringes

Soft Floor Layers (Including
Vinyl and Carpet).....$ 29.04 12.52

PAIN0188-005 07/01/2015

Rates Fringes

GLAZIER.....$ 40.00 16.00

PLAS0528-002 07/01/2016

Rates Fringes

PLASTERER.....$ 37.01 15.84

PLAS0528-004 06/01/2016

Rates Fringes

CEMENT MASON/CONCRETE FINISHER...$ 39.52 16.04

PLUM0026-007 01/01/2016

Rates Fringes

PLUMBER (Excluding HVAC Pipe
Installation).....$ 44.82 20.40
REFRIGERATION MECHANIC.....$ 42.34 24.47

PLUM0026-008 12/01/2015

Rates Fringes

PIPEFITTER (HVAC Pipe
Installation Only).....$ 44.82 20.40
PIPEFITTER.....$ 44.82 20.40

ROOF0153-004 07/01/2015

Rates Fringes

ROOFER (Includes Roof Tear
Off, Waterproofing, and
Installation of Metal Roofs).....$ 32.25 12.62
---
* SFWA0699-006 07/01/2016

Rates Fringes

SPRINKLER FITTER (Fire
Sprinklers).....$ 47.97 24.02

SHEE0066-023 06/01/2012

Rates Fringes

Sheet Metal Worker (Including
HVAC Duct Work and
Installation of HVAC Systems)....$ 44.44 22.49
---
* TEAM0174-005 01/01/2016

Rates Fringes

Truck drivers:
ZONE A:
GROUP 2:.....$ 33.38 17.87

ZONE B (25-45 miles from center of listed cities*): Add $.70
per hour to Zone A rates.
ZONE C (over 45 miles from centr of listed cities*): Add
$1.00 per hour to Zone A rates.

*Zone pay will be calculated from the city center of the
following listed cities:

BELLINGHAM CENTRALIA RAYMOND OLYMPIA
EVERETT SHELTON ANACORTES BELLEVUE
SEATTLE PORT ANGELES MT. VERNON KENT
TACOMA PORT TOWNSEND ABERDEEN BREMERTON

TRUCK DRIVERS CLASSIFICATIONS

GROUP 2 - Semi-Trailer Truck

HAZMAT PROJECTS

Anyone working on a HAZMAT job, where HAZMAT certification is
required, shall be compensated as a premium, in addition to
the classification working in as follows:
LEVEL C: +$.25 per hour - This level uses an air purifying
respirator or additional protective clothing.
LEVEL B: +$.50 per hour - Uses same respirator protection as
Level A. Supplied air line is provided in conjunction with
a chemical "splash suit."
LEVEL A: +$.75 per hour - This level utilizes a fully-
encapsulated suit with a self-contained breathing apparatus
or a supplied air line.

SUWA2009-026 05/22/2009

Rates Fringes

LABORER: Handheld Drill.....$ 17.17 5.36

LABORER: Irrigation.....$ 11.58 0.00

LABORER: Landscape.....$ 9.90 0.00

LABORER: Overhead Door
Installation.....$ 22.31 3.44

OPERATOR: Backhoe.....$ 26.34 8.38

OPERATOR: Bulldozer.....$ 26.63 8.38

OPERATOR: Loader.....$ 30.40 8.38

OPERATOR: Mechanic.....$ 24.33 4.33

TILE SETTER.....$ 18.72 3.35

TRUCK DRIVER: Dump Truck.....$ 27.04 0.00

WELDERS - Receive rate prescribed for craft performing
operation to which welding is incidental.

==========

Unlisted classifications needed for work not included within
the scope of the classifications listed may be added after
award only as provided in the labor standards contract clauses
(29CFR 5.5 (a) (1) (ii)).

The body of each wage determination lists the classification
and wage rates that have been found to be prevailing for the
cited type(s) of construction in the area covered by the wage
determination. The classifications are listed in alphabetical
order of "identifiers" that indicate whether the particular
rate is a union rate (current union negotiated rate for local),
a survey rate (weighted average rate) or a union average rate
(weighted union average rate).

Union Rate Identifiers

A four letter classification abbreviation identifier enclosed
in dotted lines beginning with characters other than "SU" or
"UAVG" denotes that the union classification and rate were
prevailing for that classification in the survey. Example:
PLUM0198-005 07/01/2014. PLUM is an abbreviation identifier of
the union which prevailed in the survey for this
classification, which in this example would be Plumbers. 0198
indicates the local union number or district council number
where applicable, i.e., Plumbers Local 0198. The next number,

005 in the example, is an internal number used in processing the wage determination. 07/01/2014 is the effective date of the most current negotiated rate, which in this example is July 1, 2014.

Union prevailing wage rates are updated to reflect all rate changes in the collective bargaining agreement (CBA) governing this classification and rate.

Survey Rate Identifiers

Classifications listed under the "SU" identifier indicate that no one rate prevailed for this classification in the survey and the published rate is derived by computing a weighted average rate based on all the rates reported in the survey for that classification. As this weighted average rate includes all rates reported in the survey, it may include both union and non-union rates. Example: SULA2012-007 5/13/2014. SU indicates the rates are survey rates based on a weighted average calculation of rates and are not majority rates. LA indicates the State of Louisiana. 2012 is the year of survey on which these classifications and rates are based. The next number, 007 in the example, is an internal number used in producing the wage determination. 5/13/2014 indicates the survey completion date for the classifications and rates under that identifier.

Survey wage rates are not updated and remain in effect until a new survey is conducted.

Union Average Rate Identifiers

Classification(s) listed under the UAVG identifier indicate that no single majority rate prevailed for those classifications; however, 100% of the data reported for the classifications was union data. EXAMPLE: UAVG-OH-0010 08/29/2014. UAVG indicates that the rate is a weighted union average rate. OH indicates the state. The next number, 0010 in the example, is an internal number used in producing the wage determination. 08/29/2014 indicates the survey completion date for the classifications and rates under that identifier.

A UAVG rate will be updated once a year, usually in January of each year, to reflect a weighted average of the current negotiated/CBA rate of the union locals from which the rate is based.

WAGE DETERMINATION APPEALS PROCESS

1.) Has there been an initial decision in the matter? This can be:

* an existing published wage determination
* a survey underlying a wage determination
* a Wage and Hour Division letter setting forth a position on a wage determination matter
* a conformance (additional classification and rate) ruling

On survey related matters, initial contact, including requests for summaries of surveys, should be with the Wage and Hour Regional Office for the area in which the survey was conducted because those Regional Offices have responsibility for the Davis-Bacon survey program. If the response from this initial contact is not satisfactory, then the process described in 2.) and 3.) should be followed.

With regard to any other matter not yet ripe for the formal process described here, initial contact should be with the Branch of Construction Wage Determinations. Write to:

Branch of Construction Wage Determinations
Wage and Hour Division
U.S. Department of Labor
200 Constitution Avenue, N.W.
Washington, DC 20210

2.) If the answer to the question in 1.) is yes, then an interested party (those affected by the action) can request review and reconsideration from the Wage and Hour Administrator (See 29 CFR Part 1.8 and 29 CFR Part 7). Write to:

Wage and Hour Administrator
U.S. Department of Labor
200 Constitution Avenue, N.W.
Washington, DC 20210

The request should be accompanied by a full statement of the interested party's position and by any information (wage payment data, project description, area practice material, etc.) that the requestor considers relevant to the issue.

3.) If the decision of the Administrator is not favorable, an interested party may appeal directly to the Administrative Review Board (formerly the Wage Appeals Board). Write to:

Administrative Review Board
U.S. Department of Labor
200 Constitution Avenue, N.W.
Washington, DC 20210

4.) All decisions by the Administrative Review Board are final.

==========

END OF GENERAL DECISION