Homeland Security

T-020-63804
PNNL-23224

Prepared for the U.S. Department of Homeland Security
Domestic Nuclear Detection Office
under U.S. Department of Energy Contract DE-AC05-76RL01830

PVT IMPROVEMENT PROJECT

RPM Dimensions and Interfaces Relevant to Technology Refresh Assessment

Revision 0

March 17, 2014

Pacific Northwest
NATIONAL LABORATORY

Proudly Operated by Battelle *Since 1965*

DISCLAIMER

This report was prepared as an account of work sponsored by an agency of the United States Government. Neither the United States Government nor any agency thereof, nor Battelle Memorial Institute, nor any of their employees, makes **any warranty, express or implied, or assumes any legal liability or responsibility for the accuracy, completeness, or usefulness of any information, apparatus, product, or process disclosed, or represents that its use would not infringe privately owned rights**. Reference herein to any specific commercial product, process, or service by trade name, trademark, manufacturer, or otherwise does not necessarily constitute or imply its endorsement, recommendation, or favoring by the United States Government or any agency thereof, or Battelle Memorial Institute. The views and opinions of authors expressed herein do not necessarily state or reflect those of the United States Government or any agency thereof.

PACIFIC NORTHWEST NATIONAL LABORATORY
operated by
BATTELLE
for the
UNITED STATES DEPARTMENT OF ENERGY
under Contract DE-AC05-76RL01830

T-020-63804, Rev. 0
PNNL-23224

PVT Improvement Project

RPM Dimensions and Interfaces Relevant to Technology Refresh Assessment

March 17, 2014

Prepared for the U.S. Department of Homeland Security
Domestic Nuclear Detection Office
under U.S. Department of Energy Contract DE-AC05-76RL01830

Pacific Northwest National Laboratory
Richland, Washington 99352

Revision Log and Approvals

RPM Dimensions and Interfaces Relevant to Technology Refresh Assessment

Rev. No.	Date	Describe Changes	Pages Changed
0	1/6/2014	Original document	N/A
0	3/17/2014	This document was previously written erroneously as an RPMP project document. This is a PVT Improvement project document.	N/A

Name and Title	Approvals	Date
Mark Sturges, Responsible Author	Approved via email	03/17/2014
Joel Hoyt, Technology Refresh Task Manager	Approved via email	03/16/2014
Dave Carroll, Deputy Project Manager	Approved via email	03/16/2014
Note: Document approvals that were received via email are retained in the project records. RADS ADC Identifier: aIKKle		

Purpose

This document was prepared to support the evaluation of radiation portal monitor (RPM) technology refresh systems under the Domestic Nuclear Detection Office (DNDO) technology refresh assessment program. This document identifies approximate dimensional and interface constraints for the purpose of supporting the demonstration of commercially available technology refresh alternatives. This document is not intended for RPM system acquisition purposes.

Technology refresh represents the minimal actions required to update radiation portal monitors to extend the service life of currently deployed systems. These minimal actions could range from simply changing software settings to substantial replacement or refurbishment of parts or subsystems.

Some of the interfaces described in this document represent full capabilities of qualified systems currently deployed and operated. The project may or may not require technology refresh solutions to interface with all items noted.

Dimensional Constraints

RPM Stand Footprint

RPM baseplates and foundations minimally define the acceptable footprint for RPM stands and ancillary equipment (e.g., control boxes, battery boxes, and external annunciators). RPM baseplates and foundations range in footprint from 6’ – 8’ wide and 4’ – 5’ deep. Anchor bolt patterns are provided below.

Curb Height

The current RPMs have a maximum curb height of 10” in order to keep the bottom of the polyvinyl toluene (PVT) detector no greater than 24” off the ground. Adaptor plates could be used to mount new shrouds to existing foundations as long as the as-configured system meets this elevation requirement and the ANSI N42.35-2006 performance requirements.

Lane Widths

Existing panel-to-panel lane widths (detector-to-detector lane widths) at each site and lane shall not be exceeded. Typically these range from 12 to 22 feet depending on system configuration (e.g., standard vs. wide loads).

Detector Coverage

RPM configurations and designs are based on systems meeting ANSI N42.35-2006. Technology refresh systems are expected to be configured similarly to meet this standard in the field.

Total Height

Several RPM installations on the southern and northern border are under canopies or inside buildings. At these sites, a total system height limitation may exist. Height limitations will not be more restrictive than the total heights of the current systems.

Reusable Equipment and Infrastructure (at technology refresh supplier option)

The technology refresh solution supplier is solely responsible for intellectual property considerations associated with the technology refresh solutions proposed. General interface descriptions are provided below.

Shrouds

The shroud dimensions for the Science Applications International Corporation (SAIC) RPM8 system are included in Table 1. Note that when the shrouds are stacked for cargo applications, the vertical dimension is doubled.

Table 1. SAIC Shroud Dimensions

Point of Reference	Height (vertical)	Width (parallel with lane)	Depth (perpendicular to lane)
Internal	7’ 4 ¼”	3’ 1”	1’ 4 ¼”
External	7’ 5 ¾”	3’ 2”	1’ 5 ¼”

The shroud dimensions for the Ludlum system are included in Table 2. Note that when the shrouds are stacked for cargo applications, the vertical dimension is doubled.

Table 2. Ludlum Shroud Dimensions

Point of Reference	Height (vertical)	Width (parallel with lane)	Depth (perpendicular to lane)
Internal	7’ 1 ¼”	2’ 6 1/4”	1’ 5”
External	7’ 2”	2’ 6 1/2”	1’ 6”

Helium-3 Tubes

SAIC outside dimensions:

- LND P/N 253109, 2” diameter x 73.35” tall with 1.88” HN connector (75.23” total)

Ludlum outside dimensions:

- GE Reuter Stokes P/N RS-P4-1672-207, dimensions within range of other tubes noted
- LND P/N 253124, 2” diameter x 73.35” tall with 1.88” HN connector (75.23” total)
- Saint Gobain P/N 183-HE3-205-50HS, 2” diameter x 73.3” tall with 1.4” HN connector (74.7” total)
- Saint Gobain P/N 183-HE3-228-50HS, 2” diameter x 73.3” tall with 1.4” HN connector (74.7” total)

Foundations

Structural design basis for deployed RPM foundations are based on the physical dimension of the RPM shrouds provided above and the following nominal weights:

- RPM (per shroud and RSP) – 2200 pounds
- control box – 60 pounds
- battery box – 110 pounds.

Fixed Foundations

High strength concrete foundations with embedded 1” diameter anchor bolts. Foundations sized to meet local environmental conditions (wind load and seismic). Bolt patterns vary to match existing SAIC (Type 1 or Type 2) or Ludlum RPMs. Figure 1 represents a typical excavated foundation found at RPM deployments.

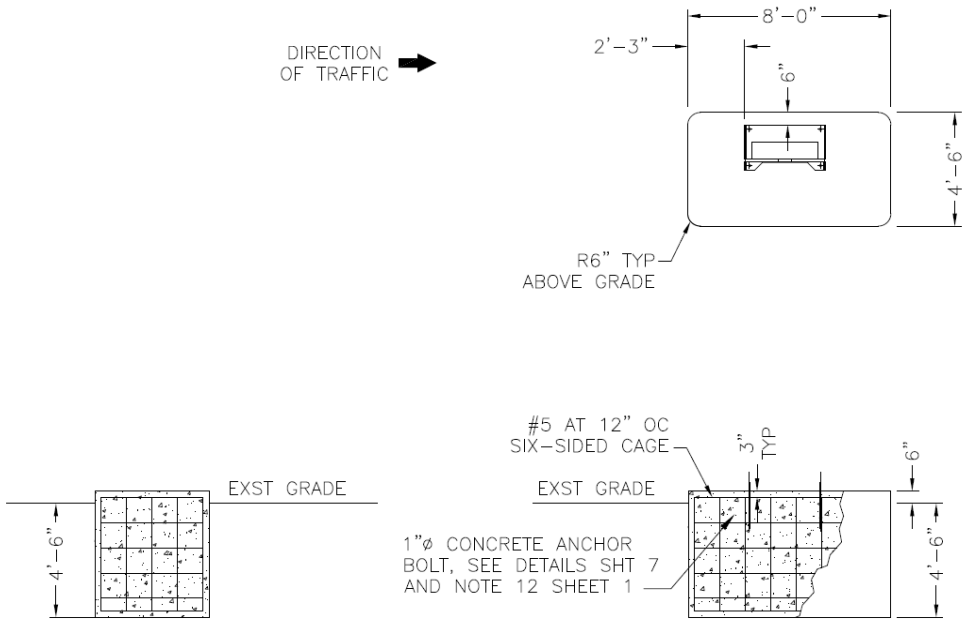

Figure 1. Example of Excavated Cargo RPM Foundation

Relocatable Foundations

Steel base plates with concrete or steel ballast are sometimes used as RPM foundations. These base plates were deployed in two configurations: 6’ 2” x 4’ x 1” and 6’ 2” x 5’ x 1”. Concrete ballast cargo RPM relocatable base plates were designed to meet 150 mph (3-second gust) and a seismic load of 0.4. Steel ballast cargo RPM relocatable base plates were deployed with sufficient steel ballast plates to meet local environmental conditions. Figure 2 includes a description of a steel base plate utilizing concrete blocks as ballast found at RPM deployments. Figure 3 shows an elevation view of a steel base plate utilizing steel plates as ballast found at RPM deployments.

Prefab Foundation:

In some locations, engineered relocatable foundation constructed with steel and concrete are used. These are primarily deployed on the northern border with privately owned vehicle (POV) RPMs. Prefab foundations are deployed to meet local environmental conditions.

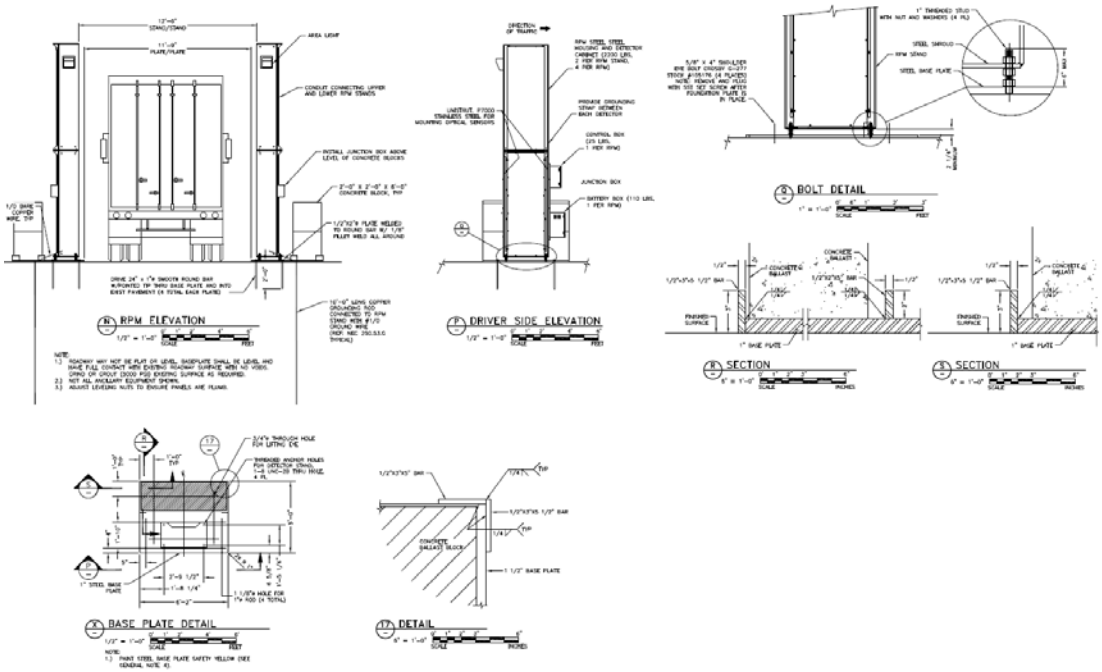

Figure 2. Example of Concrete Ballast Base Plate RPM Foundation

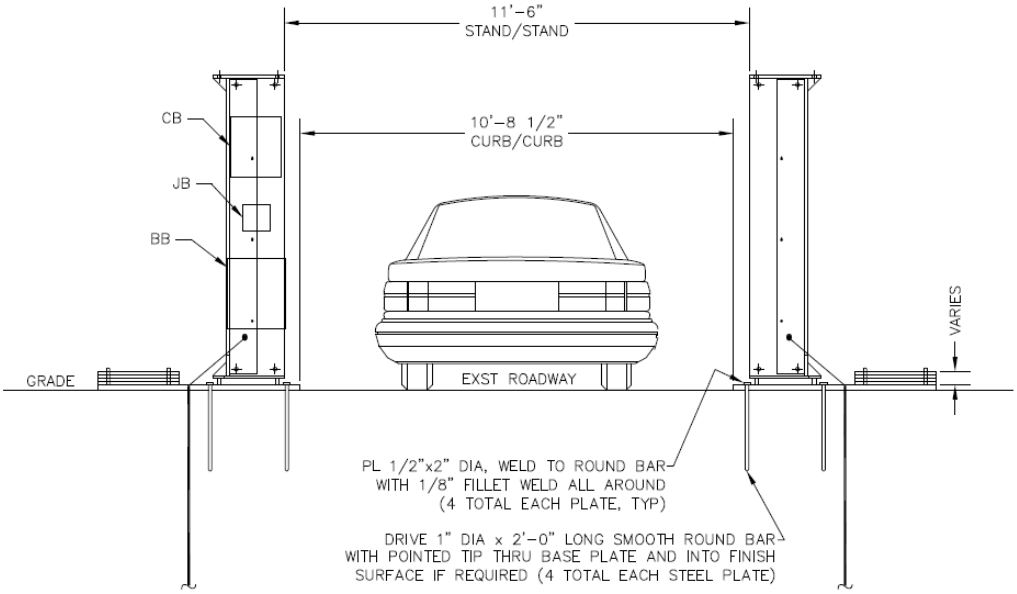

Figure 3. Example of Steel Ballast Base Plate RPM Foundation

Anchor Bolts

RPM anchor bolts are 1” diameter ASTM F1554 Grade 55 bolts. Anchor bolt nuts meet ASTM DH. All components meet ASTM A153. Bolts should be inspected before reuse. The bolt patterns for SAIC Type 1, SAIC Type 2/3, and Ludlum RPMs are shown in Figures 4 and 5.

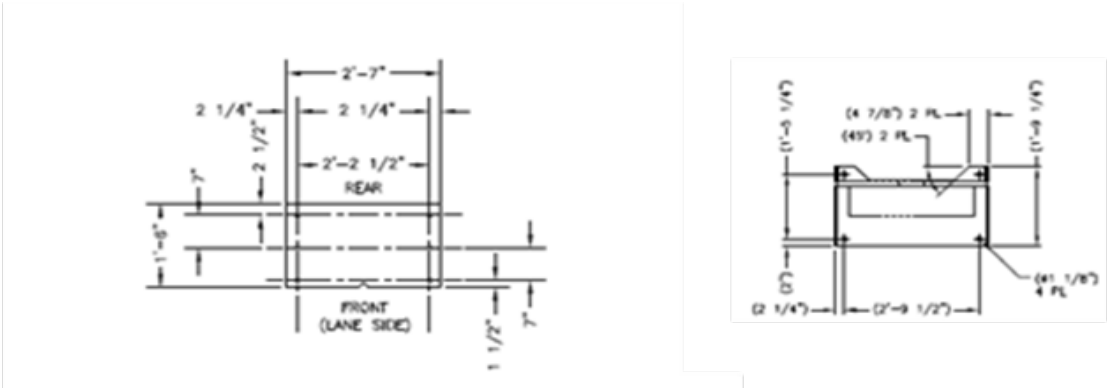

Ludlum SAIC Type 2/3

Figure 4. Anchor Bolt Detail for Ludlum and SAIC Type 2/3 RPM Stands

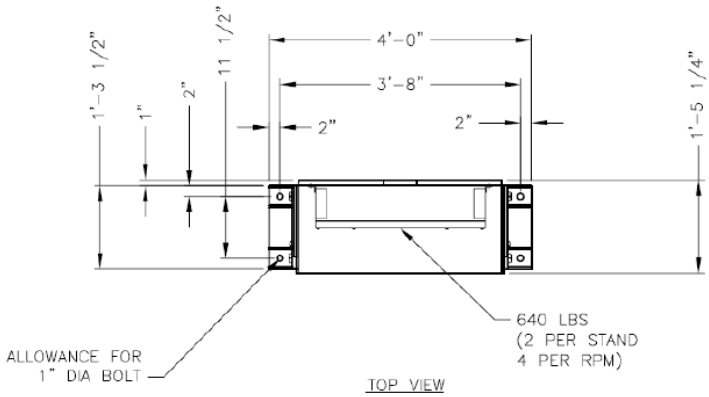

Figure 5. Anchor Bolt Detail for SAIC Type 1 RPM Stands

Power

Each SAIC and Ludlum RPM was installed with a dedicated 15-A breaker. Power conductor size is based on a 3.5-A maximum current draw at 120 V AC and sized to prevent a voltage drop not to exceed 3%. Typically three 12 AWG THWN power conductors were installed. On rare occasion 10 AWG conductors were installed to meet voltage drop requirements. In general, approximately 5 amps are allocated to the RPM detector. The remainder is allocated for ancillary equipment such as cameras, lights, and traffic control.

Communications (cabling/fiber)

The communications cabling deployed on the RPM project has evolved significantly over the life time of the project. Early installations included shielded and unshielded CAT -5 cables and various shielded and

unshielded multi-paired cables for programmable logic controller (PLC) and annunciator communications. If the technology refresh solution requires new cabling to be installed, the requirements listed below must be met:

SAIC

- Control box to supervisory computer, monitor computer and local Ethernet switch: One shielded CAT-6 cable. Burial rated cable used in all below grade applications.
- Control box to PLC: 18 AWG/22 AWG 9-12 strand cable
- Control box to annunciator: 18 AWG/22 AWG multi-pair cable (ALPHA 35484 [22 AWG] or ALPHA 35376 [18 AWG])
- RSP to RSP: 18 AWG/22 AWG multi-pair cable (ALPHA 35484 [22 AWG] or ALPHA 35376 [18 AWG])
- Fiber: 6 to 24 strand single-mode fiber. Armored-burial rated fiber used in all below grade applications.

Ludlum

- Control box to supervisory computer, monitor computer and local Ethernet switch: One shielded CAT-6 cable. Burial rated cable used in all below grade applications.
- Control box to PLC: 18 AWG/22 AWG 9-12 strand cable
- Control box to annunciator: Belden 9947 - a 15 conductor cable with 22 AWG stranded 7 x 30 tinned copper conductors, S-R PVC insulation, a foil shield (100% coverage), a braided shield (65% coverage) and a PVC jacket
- RSP to RSP: Belden 8774 - a 9-pair cable with 22 AWG stranded 7 x 30 tinned copper conductors, polypropylene insulation, twisted pairs individually foil shielded (100% coverage), overall PVC jacket, and 22 AWG stranded tinned copper drain
- Fiber: 6 to 24 strand single-mode fiber. Armored-burial rated fiber used in all below grade applications.

Surge Protection Devices (SPD)

SPDs are deployed at many RPM deployments where CAT-6 data and communications cables transition for exterior to interior spaces occupied by U.S. Customs and Border Protection (CBP) officers.

Conduit

- Power and communications cables are run in separate conduits.
- 2” diameter minimum conduit for below grade conduit runs. Some earlier installations used multiple 1” diameter conduits to meet the 2” diameter minimum requirement.
- Polymer-coated RMC is used for all transitions from horizontal to vertical stub-ups.
- Spare conduit capacity was provided in the original deployments. Capacity was provided as larger conduit with innerducts or the addition of spare conduit. Availability will need to be determined on a site-by-site basis.

RSP Enclosure (includes lead shielding)

- SAIC external dimension: 31” W x 8” H x 87” D NEMA 4 enclosure
- Ludlum external dimension: 24.5” W x 9” H x 82” D NEMA 4 enclosure.

Battery Box

- SAIC external dimension: 17” W x 13” H x 21” D NEMA 4 enclosure
- Ludlum: batteries and charger are included in control box.

Control Box

- SAIC external dimension: 15” W x 18” H x 9.5” D NEMA 4 enclosure
- Ludlum external dimension: 16” W x 20” H x 6” D NEMA 4 enclosure.

Annunciator Configuration

It is not uncommon for one RPM to annunciate at multiple locations. Many secondary RPMs annunciate at an outdoor annunciator located at the RPM and an interior annunciator located at a CBP booth. Most remotely operated RPMs annunciate locally at a CBP booth and at a CBP command center or control room. This is typically accomplished by converting the annunciator signal from copper to fiber via a media converter (MC). The exiting MC converts RS-485 to fiber. An MC is required at each end of this signal. A third type of multiple annunciation is accomplished by daisy chaining or serial connections of the annunciators.

Vehicle Presence Sensors (VPS) and Sunshields

Break beam VPS is powered by a 24-V DC output for SAIC, and 12-VDC for Ludlum. The VPS output signal is a transistor-driven npn output or pnp output.

Supervisor Computer/Monitor Computer

A wide variety of computer models have been used in RPM deployments. The following is a partial list of supervisory and monitor computers that have been deployed. These systems are all currently running on the Windows XP operating system.

Table 3. Deployed Supervisory, Monitor and CBP Workstation Computers

Mfg.	Model	# Deployed	Mfg.	Model	# Deployed
Dell	OptiPlex 745	79	Dell	Precision 360	10
Dell	OptiPlex 755	247	Dell	Precision 370	2
Dell	OptiPlex 780	18	Dell	Precision 450	7
Dell	OptiPlex 790	18	Dell	Precision 470	28
Dell	OptiPlex GX270	3	Dell	Precision 690	20
Dell	OptiPlex GX280	32	HP	XW6200	59
Dell	OptiPlex GX620	128		Total	651

Work is ongoing to upgrade computers and software to be compatible with Windows 7 operating system. Once RPM systems are upgraded to Windows 7, many of the computers listed in Table 3 will be retired. Following the upgrade, computer systems will be HP 8300 and possibly Dell OptiPlex 745, 755, 780, and 790.

Media Converters for Extending RS-485 Annunciator Signal

See annunciator configuration above.

Interfaces

Vehicle Identification System (VIS) Cameras

VIS cameras are an integral component of the RPM interdiction system. There are various configurations used for capturing images of vehicles, license plates, and container identifications. The VIS cameras are triggered with the VPS. Image triggering varies greatly based on the RPM configuration and image required. VIS images are linked to the RPM alarm records within the existing RPM software. The types of cameras deployed include

- IQinVision IQ 862NE outdoor IP camera
- IQinVision IQ711 indoor IP camera with outdoor enclosure.

Programmable Logic Controller/Traffic Logic Controller

The RPM control box provides 5-V TTL output to a PLC. Output is used to manage traffic control hardware such as gate arms, traffic lights, beacons, etc. The output may also be used to operate other hardware such as auto-dialers.

Network Components

Ethernet switches and other network components are present at almost all RPM deployments. CBP-Office of information Technology (CBP-OIT) specifies the network equipment that must be used in *Radiation Portal Monitor Installation and Design Guidance Document: Communications and Network Infrastructure*.

PRIDE

Most currently installed RPMs are connected to a CBP network application called PRIDE (Port Radiation Inspection, Detection, and Evaluation). PRIDE connection includes but is not limited to the following:

- equipment selected from a CBP-OIT approved equipment list (computers, printers, monitors, Ethernet switches, media converters, UPSs, wireless communication, surge protection)
- CBP-OIT testing of RPM software and computers
- specially tailored computer image to satisfy CBP security requirements
- RPM software modifications and testing to communicate with PRIDE.

References

ANSI N42.35-2006. *American National Standard for Evaluation and Performance of Radiation Detection Portal Monitors for Use in Homeland Security*. American National Standards Institute.

Radiation Portal Monitor Installation and Design Guidance Document: Communications and Network Infrastructure. Version 0.3. 2009. U.S. Customs and Border Protection, Enterprise Network and Technology Support Division.

Pacific Northwest
NATIONAL LABORATORY

Proudly Operated by Battelle *Since 1965*

U.S. DEPARTMENT OF
ENERGY

902 Battelle Boulevard
P.O. Box 999
Richland, WA 99352
1-888-375-PNNL (7665)
www.pnnl.gov